© CFMOTO Powersports, Inc. This manual is subject to all applicable copyright laws. Reproduction or duplication in any form, whole or in part, is strictly prohbited.

ZFORCE Z10
ZFORCE Z10-4

Service Manual

CFMOTO

Edition Number: 20260401
Edition Item: CF1000SU, CF1000SZ, CF1000SU-L CF1000SZ-L (5DYV-WX-01-1)
Service Manual - 20260729

This manual is intended for use by experienced technicians in a fully equipped workshop and is intended primarily for reference. All references to left and right are made from the perspective of the driver while seated in the driving position.

Certain procedures outlined in this manual require a sound knowledge of mechanical or electrical theory, tool use and shop procedures in order to perform the work safely and correctly. Technicians should read the contents of this manual and understand the procedures before beginning repairs. Certain procedures require the use of specialized tools. Use only the proper tools specified. If you have any questions about your ability to perform any of the procedures outlined in this manual, contact an authorized dealer for service.

The information in this manual includes the most current product information available at the time of publishing and may contain product information that does not apply to your particular market. The instructions contained in this publication are not legally binding. CFMOTO reserves the right to modify or completely delete technical instructions, service instructions, maintenance instructions, prices, colors, shapes, materials, designs, configurations and similar content without prior notice and without reason. Due to continuous improvements in the design and quality of production components, minor discrepancies may result between the actual vehicle and the information provided within. No liability can be accepted for omissions, deviations, inaccuracies, printing defects or errors in the delivery method, drawings and instructions. Any reproduction or reuse of the images, descriptions and/or procedures within, whether whole or in part, is expressly prohibited without written permission from the copyright holder.

© CFMOTO Powersports, Inc. This manual is subject to all applicable copyright laws. Reproduction or duplication in any form, whole or in part, is strictly prohbited.

www.cfmoto.com

FOREWORD

This service manual introduces ZFORCE Z10 and Z10-4 maintenance information, removal & installation procedures, inspection & adjustment methods, troubleshooting and technical specifications in detail. Illustrations are included to guide your operations.

Please read this manual carefully and maintain the vehicle according to the standard operation method, which can effectively prolong parts service life, improve the engine performance and the reliability of the vehicle.

Part 1:
Chapters 1, 2, and 3 describe safety information, technical parameters, and maintenance.

Part 2:
Chapters 4 to 12 describe the methods and precautions for disassembly, inspection, maintenance and assembly of parts of each system.

Appendix: Special tools, start circuit diagrams, EFI schematic diagram and electrical schematic diagrams

The following table shows the commercial names and corresponding models applicable to this service manual:

Commercial Name	Z10	Z10-4
Model	CF1000SU CF1000SZ	CF1000SU-L CF1000SZ-L

This manual can be reproduced only after obtaining the written consent of the copyright owner, including extracts or copies in any form.

Zhejiang CFMOTO Power Co., Ltd.
All rights reserved

CHAPTER INDEX

Safety Information	1
Technical Information	2
Maintenance Information	3
CVT System / Transmission	4
Engine	5
Vehicle and Body Panels	6
Powertrain	7
Brake System	8
Suspension System	9
Steering System	10
Cooling System	11
Electrical / EFI System	12
Electrical Schematic Diagram	Appendix

© CFMOTO Powersports, Inc. This manual is subject to all applicable copyright laws. Reproduction or duplication in any form, whole or in part, is strictly prohbited.

INTENTIONAL BLANK / REMARKS PAGE

© CFMOTO Powersports, Inc. This manual is subject to all applicable copyright laws. Reproduction or duplication in any form, whole or in part, is strictly prohibited.

1.1 Service Manual 01-2
1.2 Safety Tips 01-2
1.3 Hazardous Level and Symbols 01-2
1.4 Operation Notice 01-2
1.5 General Precautions 01-3
1.5.1 Avoid Carbon Monoxide Poisoning 01-3
1.5.2 Avoid Corrosion Injury by Electrolyte 01-3
1.5.3 Avoid Injury 01-3
1.5.4 Avoid Scald 01-3
1.5.5 Avoid Toxic Coolant 01-3
1.5.6 Avoid Explosions and Fires 01-3
1.5.7 Operational Safety 01-3
1.6 Cautions for Component Removal and Installation 01-4
1.7 Warranty 01-5
1.8 Illustrations and Captions 01-5

© CFMOTO Powersports, Inc. This manual is subject to all applicable copyright laws. Reproduction or duplication in any form, whole or in part, is strictly prohbited.

1.1 Service Manual

Before maintenance, please read this service manual carefully. This manual introduces All-terrain vehicle maintenance information, removal & installation procedures, checking & adjustment methods, troubleshooting and technical specifications, with detailed diagrams to guide technicians. It will help improve the efficiency of vehicle repair and maintenance.

1.2 Safety Tips

For safe use of the vehicle, safety tips need to be observed. Please read this service manual carefully.

Safety tips display in highlighted text and linked to the relevant location.

⚠CAUTION: There are labels or warning labels on the visible places of the vehicle. Do not remove any label to prevent people not being able to identify the danger, which could result in injury.

1.3 Hazardous Level and Symbols

DANGER/WARNING/CAUTION

Please read the following explanation carefully, as it highlights the specific meanings of the words DANGER, WARNING and CAUTION.

⚠DANGER: The Danger alert and icon indicates a potential hazard that may cause serious injuries or death.

⚠WARNING: The Warning alert and icon indicates a potential hazard that may cause light or medium injury.

⚠CAUTION: The Caution alert and icon indicates a potential hazard that requires you to pay attention.

NOTE: Prompts that make the process simpler or clearer.

Danger, Warning and Caution instructions cannot include all the risks during use or maintenance of the vehicle. Therefore, besides the notices on the vehicle, technicians should have basic mechanical and safety knowledge, or ask a senior mechanic for help.

1.4 Operation Notice

For some procedures, special tools are needed. These tools can be purchased according to their part number.

During installation, some parts (like seals, O-rings, cotter pins, etc.) cannot be reused and must be replaced with a new one. Follow the manufacturer's instructions when applying threadlocker to bolts.

For parts that will be reused after removal, clean them thoroughly and inspect for damage or cracks. Replace if damaged.

Ensure vehicle is tested for safety after repair or maintenance.

© CFMOTO Powersports, Inc. This manual is subject to all applicable copyright laws. Reproduction or duplication in any form, whole or in part, is strictly prohibited.

1.5 General Precautions

1.5.1 Avoid Carbon Monoxide Poisoning

⚠CAUTION: Exhausted gas is poisonous. Do not run the engine in a closed or poorly ventilated area for a long time.

1.5.2 Avoid Corrosion Injury by Electrolyte

⚠CAUTION:
1. Battery electrolyte (dilute sulfuric acid) is highly caustic and can result in burns. If you spill electrolyte on skin, flush with water and seek medical attention immediately.
2. If you spill electrolyte on clothes, flush with water to avoid burns.
3. Keep battery and electrolyte out of reach of children.

1.5.3 Avoid Injury

⚠CAUTION: Wear suitable protective clothes, cap, boots, glasses, dust-proof mask, and gloves if necessary.

1.5.4 Avoid Scald

⚠CAUTION: Engine and muffler temperatures are still high when the engine has just stopped. Avoid getting burned. Do not touch the engine before it completely cools down. Wear long-sleeved work clothes and gloves when servicing.

1.5.5 Avoid Toxic Coolant

⚠CAUTION:
1. Coolant is poisonous. Do not drink or spill it on skin, eyes or clothes. If you spill coolant on skin, wash with soap and water. If you spill coolant on eyes, flush with water and seek prompt medical attention.
2. If coolant is swallowed, induce vomiting and seek a doctor for medical care.
3. Keep coolant out of reach of children, and keep it away from pets.

1.5.6 Avoid Explosions and Fires

⚠CAUTION:
1. Gasoline is highly flammable. Do not allow sparks or fire in the area. Keep gasoline away from sparks. Vaporized gasoline is also explosive. Fuel and operate the vehicle in a well-ventilated area.
2. The battery produces flammable and explosive hydrogen when it is charged. It has the potential danger of explosion if there is a fire or sparks. Charge the battery in a well-ventilated area.

1.5.7 Operational Safety

⚠CAUTION:
1. Be careful not to get pinched by rotating parts, like wheels, axles, and clutch.
2. When more than two persons are working on the vehicle, remind each other of operational safety.

© CFMOTO Powersports, Inc. This manual is subject to all applicable copyright laws. Reproduction or duplication in any form, whole or in part, is strictly prohbited.

1.6 Cautions for Component Removal and Installation

⚠CAUTION:

1. Use genuine CFMOTO parts or CFMOTO recommended parts, lubricants and greases.
2. Store the removed components separately in order for correct installation.
3. Clean mud and dust before servicing.
4. Replace removed retainers, O-rings, piston pin retainers, cotter pins with new ones.
5. Elastic retainers might get distorted after disassembly. Do not use loosened retainers.
6. Clean and blow dry parts after removal. Apply lubricants on the surface of moving parts.
7. Before disassembling, the necessary site should be inspected and the relevant data determined so that it can be restored to the state before disassembling.
8. Pre-tighten bolts, nuts and screws, then torque them to specified specification. The basic sequence is: from big to small, from inside to outside and criss-cross.
9. Replace aged rubber parts when assembling. Do not splash gasoline, grease onto the surface, as this could cause damage.
10. Apply or inject recommended lubricant into the specified lubrication area as instructed in the Service Manual.
11. Use the correct special tools for removal and installation of parts.
12. Rotate the inner ring or outer ring of ball bearings with a finger to confirm whether the rotation is flexible and smooth. When a ball bearing is removed by pressing the steel balls, it cannot be reused.
    - ·Replace bearings if the axial or radial freeplay is too big.
    - ·If the running surface feels uneven, clean with oil and check again. Replace it if the cleaning does not work.
    - ·When pressing the bearing into the machine or onto the shaft, if the bearing can not be securely seated, replace it.
13. Oil or grease the bearings before assembly. Install one-side dust-proof bearings in the right direction. When assembling open type or double-side dust-proof bearings, install with the manufacturer's mark outward.
14. Install the rectangular circlip with the chamfer facing the direction of force. Do not reuse circlips that are loose. Install elastic circlips properly. Turn the circlip after assembling to make sure it has been installed into the slot.
15. After assembling, check that all the tightened parts are properly tightened and can move smoothly.
16. Brake fluid and coolant may damage paint, plastic and rubber parts. Flush with water if splashed on these parts.
17. Install oil seals with the side of manufacturer's mark outward (no oil direction). Do not fold or scratch the oil seal lip. Apply grease to the oil seal lip before assembling.
18. When installing pipes, insert the pipe until it bottoms in the end of the joint. Fit the pipe clip, if any, into the groove. Replace pipes or hoses that cannot be tightened.
19. Do not allow mud or dust into the engine, coolant, brake or hydraulic systems.
20. Clean gasket material off the sealing surfaces before assembling. Remove scratches on joint faces by polishing evenly with a polish stone.
21. Do not twist or bend cables. Distorted or damaged cables may cause poor operation or even damage components.
22. When assembling parts with protection caps, ensure to fully insert the caps to the grooves.

© CFMOTO Powersports, Inc. This manual is subject to all applicable copyright laws. Reproduction or duplication in any form, whole or in part, is strictly prohibited.

1.7 Warranty

Maintenance procedures specified in the schedule should only be carried out in CFMOTO authorized service center. Otherwise, warranty and warranty rights may be affected. In the event of damage caused by incorrect operation or modification of the vehicle, no warranty is available. Refer to the Warranty section of the owner's manual for detailed information.

Use only spare parts and accessories approved or recommended by CFMOTO. For loss caused by using non-CFMOTO parts, CFMOTO shall not be responsible.

For the latest information about vehicles and their use, please visit the CFMOTO official website: https://www.cfmoto.com/global

1.8 Illustrations and Captions

The pictures in this service manual may include optional tools.
Parts may have been removed or not shown in the pictures for better display and illustration. Not all instructions may be required for part removal. Please note the text before proceeding.
Numbers in the bottom right corner of the pictures in this service manual are for CFMOTO internal use with no special significance.

© CFMOTO Powersports, Inc. This manual is subject to all applicable copyright laws. Reproduction or duplication in any form, whole or in part, is strictly prohbited.

INTENTIONAL BLANK / REMARKS PAGE

© CFMOTO Powersports, Inc. This manual is subject to all applicable copyright laws. Reproduction or duplication in any form, whole or in part, is strictly prohibited.

2.1 Unit Conversion Table and Symbols 02-2
2.2 Identification Number Locations 02-3
2.3 Main Vehicle Specifications 02-4
2.4 Maintenance Specifications 02-5
2.5 Fastener Torque Values 02-8
2.5.1 Torque Table - Vehicle 02-8
2.5.2 Torque Table - Engine 02-11
2.5.3 General Fastener Torque Values 02-15
2.6 Greases and Sealants 02-16
2.7 Engine Service Supplies 02-17

© CFMOTO Powersports, Inc. This manual is subject to all applicable copyright laws. Reproduction or duplication in any form, whole or in part, is strictly prohbited.

2.1 Unit Conversion Table and Symbols

Unit Conversion Table

Item	Unit Conversion
Pressure	1 kgf/cm^2 = 98.0665 kPa
	1 psi = 6.895 kPa = 0.06895 bar
	1 mmHg = 133.322 Pa = 0.133322 kPa
Torque	1 kgf·m = 9.80665 N•m
	1 N·m = 8.85 (lbf-in.)
	1 N·m = 0.73756 21(lbf-ft.)
Volume	1 mL = 1 cm^3 = 1 cc
	1 L = 1000 cm 3
Force	1 kgf = 9.80665 N
Length	1 in. = 25.4 mm

Symbols

V	Indicates voltage measurement
A	Indicates current measurement
Ω	Indicates resistance measurement

© CFMOTO Powersports, Inc. This manual is subject to all applicable copyright laws. Reproduction or duplication in any form, whole or in part, is strictly prohbited.

2.2 Identification Number Locations

Models: CF1000SU, CF1000SU-L, CF1000SZ, CF1000SZ-L

1. Frame Number:

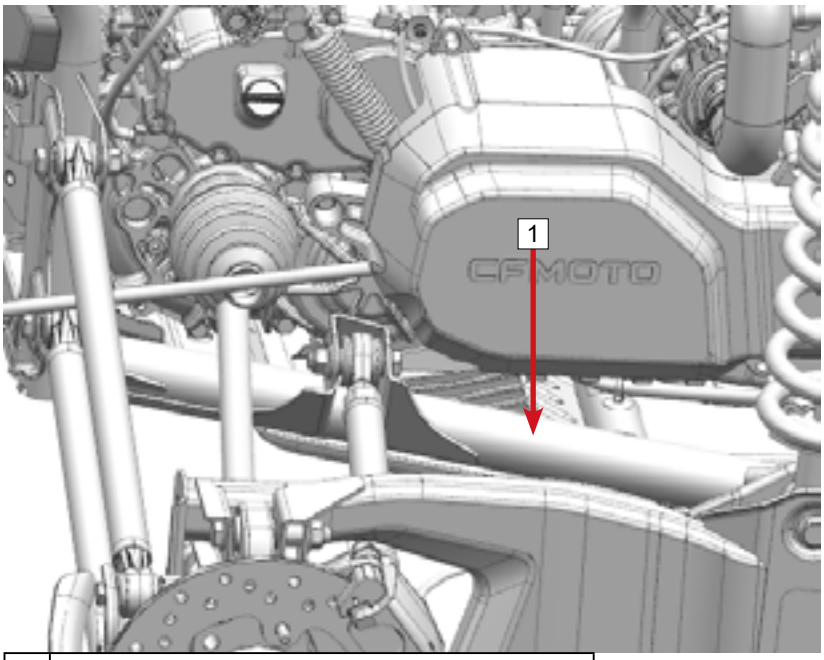

1	Frame Number Location

2. Engine Number:

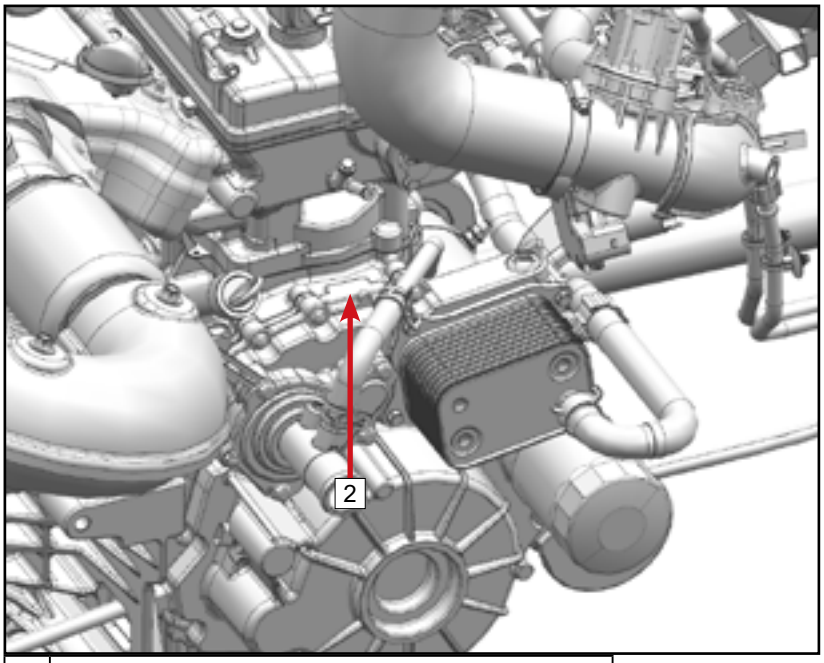

2	Engine Number Location

© CFMOTO Powersports, Inc. This manual is subject to all applicable copyright laws. Reproduction or duplication in any form, whole or in part, is strictly prohbited.

2.3 Main Vehicle Specifications

Item	Specification	
Model	**Z10**	**Z10-4**
Overall Length	129 in. (327.7 cm)	159 in. (403.9 cm)
Overall Width	65 in. (165.1 cm - outermost edge of tire) 64 in. (162.5 cm - outermost edge of rim)	
Overall Height	68.5 in. (174.0 cm)	
Wheel Base	99 in. (251.5 cm)	129 in. (327.7 cm)
Ground Clearance (No Load)	14 in. (35.6 cm)	
Suspension Travel: Front Rear	 16.9 in. (43.0 cm) 20 in. (50.8 cm)	
Minimum Turning Radius	216.5 in. (550.0 cm)	288.3 in. (732.5 cm)
Tire Type Size - Front Size - Rear Wheel Bolt Pattern	Tubeless 30x10.00R14 30x10.00R14 5x114.3 mm	
Wheel Alignment Front / Rear	5-10 mm Toe-In	
Curb Weight	1999.6 lb. (907 kg)	2253.1 lb. (1022 kg)
Passengers	2 people (80 kg/person, including driver)	4 people (80 kg/person, including driver)
Rear Cargo Box Weight Capacity	198 lb. (90 kg)	
Maximum Vehicle Load Allowed	650 lb. (295 kg)	881 lb. (400 kg)
Recommended Towing Capacities: Towing Hitch Weight Trailer and Cargo Weight	 88.2 lb. (40 kg) 882 lb. (400 kg)	
Chassis Frame Type	Steel Tube	
Engine Model	380Y-2C	
Type	In-line three-cylinder, 4-stroke, liquid-cooled, 4-valve, DOHC	
Bore × Stroke	3.1 x 2.6 in. (80 × 66.2 mm)	
Displacement	998 cc	
Compression Ratio	9:1	
Starting Type	Electric	
Lubrication Type	Pressure/Splash	
Spark Plug Type Spark Plug Gap	BN8RTI .031 in. (0.8 ±0.1 mm)	
Fuel Type Fuel Tank Capacity	89 or higher octane unleaded 11.8 gal. (45 L)	

© CFMOTO Powersports, Inc. This manual is subject to all applicable copyright laws. Reproduction or duplication in any form, whole or in part, is strictly prohibited.

2.4 Maintenance Specifications

Lubrication

Item	Specification
Engine: Type Oil Volume: Capacity Change / Oil Filter	 SAE 5W-40, SP or higher API, synthetic oil 4.43 qt. (4.2 L) 4.01 qt. (3.8 L)
CFMOTO recommends 5W-40 synthetic oil. Viscosity change to 10W-40 or 15W-40 for high temperature environments is acceptable. Refer to the chart for ambient temperature and oil viscosity selection. API classification: SP or higher.	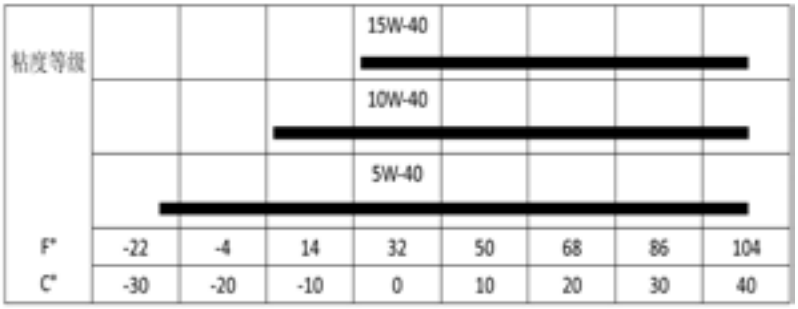
Oil pressure	When engine speed is 1200 rpm and oil temperature is 95°C, oil pressure should be greater than 14.5 Psi (100 kPa). When engine speed is 4000 rpm and oil temperature is 95°C, oil pressure should be greater than 58.0 Psi (400 kPa).
Transmission: Type Oil Volume	 SAE 75W-90 GL-5 3.17 qt. (3 L) - Maintain between 'MIN' and 'MAX' lines
Front Gear Case: Type: Oil Volume:	 SAE 80W-90 GL-5 9.5 oz. (280 ml)

Cooling

Item		Standard Value / Specification
Thermostat	Valve opening temperature	175°F (75 ± 2°C)
	Full Open Temperature	190°F (88°C)
	Full Open Lift	≥ 8 mm @ 190°F (88°C)
Expansion Tank Cap - opening pressure:		21.7 Psi (150 ±10 kPa)
Resistance of coolant temperature sensor vs. coolant temperature	Coolant Temperature (°C)	Sensor Resistance (kΩ)
	-20	13.469 - 17.453
	25	2.795 ±0.0025
	50	0.834
	80	0.290 - 0.354
	110	0.127 - 0.162
Coolant capacity	System capacity	6.87 qt. (6.5 L)
	Expansion Tank capacity	MIN - 10.1 oz. (0.3 L), MAX - 23.7 oz. (0.7 L) Total capacity - 1.05 qt. (1L)
	Water / Coolant Ratio	50% / 50%
Coolant Type		-35°C freeze protection level, anti-corrosion, high boiling point OAT coolant CFMOTO uses Organic Acid Technology (OAT) coolant in all liquid-cooled engines. Do not mix with inorganic (IAT) coolant.

© CFMOTO Powersports, Inc. This manual is subject to all applicable copyright laws. Reproduction or duplication in any form, whole or in part, is strictly prohbited.

Wheels (Front and Rear)

Item		Standard	Service Limit
Rim Runout	Longitudinal	1.0 mm	2.0 mm
	Horizontal	1.0 mm	2.0 mm
Tires	Tread Depth	——	3.0 mm
Air Pressure Z10	Front	Recommended: 21.7 Psi (150 kPa)	Full-load: 21.7 Psi (150 kPa)
	Rear	Recommended: 21.7 Psi (150 kPa)	Full-load: 24.6 Psi (170 kPa)
Air Pressure Z10-4	Front	Recommended: 21.7 Psi (150 kPa)	Full-load: 21.7 Psi (150 kPa)
	Rear	Recommended: 21.7 Psi (150 kPa)	Full-load: 27.5 Psi (190kPa)

Brake System

Item		Standard	Service Limit
Brake	Front brake disc thickness	7.5 mm	6.5 mm
	Front brake pad loss value	——	2.0 mm
	Brake pedal freeplay	135 - 145 mm	——
	Rear brake disc thickness	7.5 mm	6.5 mm
	Rear brake pad loss value	——	2.0 mm
Brake Fluid Type		DOT 4	2 years

Battery / Charging

Item		Standard	
AC magneto	Type	Permanent magnet three-phase magneto outer rotor flywheel	
	Output	Three-phase AC	
	Resistance of charging coil (20°C)	0.064 - 0.096 Ω	
	Magneto trigger coil resistance	- -	
	Magneto Max. output power	900W / 7000 rpm	
	Stable voltage	14.0 V	
	Trigger coil peak voltage	- -	
Regulator type		Three-phase ring rectifier, thyristor parallel regulation	
Battery	Volume	12V / 30Ah	
	Voltage between terminals	Fully recharged	12.8V
		Fully discharged	Less than 11.8V
	Charging current/time	Standard	2.7A / 5 - 10h
		Quick	12A/1h

© CFMOTO Powersports, Inc. This manual is subject to all applicable copyright laws. Reproduction or duplication in any form, whole or in part, is strictly prohbited.

Ignition

Item		Standard
Ignition Type		Coil-on-Plug
Spark plug	Type	Resistive
	Standard	BN8RTI
	Spark Plug Gap	.031 in. (0.8 ±0.1 mm)
	Spark characteristics	>8mm, 1 atmosphere
Ignition coil resistance	Primary	0.55 ±0.1 Ω
	Secondary	7.0 ±0.1 k Ω
Peak voltage	Ignition Coil Primary	≥ 7V @ 200 rpm
	Pulser	≥ 27.4 kV
Starter relay coil resistance		3 - 5 Ω
Starter auxiliary relay coil resistance		90 - 100 Ω

Fuses / Lights

Item		Standard
Fuses	Main	40A
	EPS	60A
	Fan	50A
	Auxiliary	10A × 3 / 15A × 5 / 25A x 3
	AUX 1 / AUX 2	30A x 2 (Under front access panel)
Lights	Headlight	18.5W LED (low beam, single-sided), 29.5W LED (high beam, single-sided) 6.5W LED (front position light, single-sided) 4.5W LED (front turn light, single-sided, if equipped)
	High beam	11W LED (high beam, single-sided)
	Tail Light	2.2W LED (reverse light, single-sided, if equipped) 0.8W LED (brake light, single-sided) 4.3W LED (rear position light, single-sided) 1.1W LED (rear turn light, single-sided, if equipped)
	Front position light	4.5W LED (front position light, single-sided, if equipped)
	Rear license light	0.7W LED bulb

© CFMOTO Powersports, Inc. This manual is subject to all applicable copyright laws. Reproduction or duplication in any form, whole or in part, is strictly prohbited.

2.5 Fastener Torque Values

NOTE:
1. **Before assembling, apply thread locker, anti-rust grease, or engine oil to threaded areas and joint surfaces where indicated.**
2. **Engine assembling materials include lubricating oil (engine oil), grease, coolant, flat surface sealant, thread locker, etc.**
3. **Torque fasteners to the standard torque chart when not documented in the tables. (Refer to section 2.5.3)**

2.5.1 Torque Table - Vehicle

Item	Qty.	Specification	Torque (N•m)	Remarks
Wheel hub sub-assembly bolts	16	M12×1.25×40	130~150	Apply 243 thread locker
Brake disc sub-assembly bolts	20	M8×1.25×16	30~35	Apply 243 thread locker
Oxygen sensor fastening nut	1	/	40~60	
Fuel pump cover and fuel tank sub-assembly	1	/	75	
Front axle fill port lock nut	1	/	25	
LH/RH front mount sub-assembly bolts	6	M10×1.25×40	40~50	Apply 243 thread locker
Rear mount sub-assembly bolts	4	M10×1.25×20	40~50	Apply 243 thread locker
Engine front mount-to-frame mounting bolts	2	M10×1.25×75	45~55	
Engine rear mount-to-frame mounting bolt	1	M10×1.25×80	45~55	
Muffler support bracket-to-transmission fastening bolts	6	M8×1.25×28	25~35	
Exhaust muffler-to-bracket mounting bolts	4	M8×1.25×60	25~35	
Front axle upper mounting bracket bolts	2	M8×1.25×40	25~35	
Front axle lower mounting point fastening bolts	2	M10×1.25×25	50~60	Apply 243 thread locker
Front axle upper mounting point bolt	1	M10×1.25×120	60~70	
Front axle lower mounting point bolt	1	M10×1.25×120	60~70	
Drive shaft-to-front axle locking bolt	1	M8×1.25×50	33	
Drive shaft front & rear coupling bolt	1	M8×1.25×50	33	
Drive shaft center support mounting brackets	2	M10×1.25×20	40~50	

© CFMOTO Powersports, Inc. This manual is subject to all applicable copyright laws. Reproduction or duplication in any form, whole or in part, is strictly prohibited.

Item	Qty.	Specification	Torque (N•m)	Remarks
Steering gear upper mounting point bolts	2	M12×1.25×135	80~90	Apply 243 thread locker
Steering gear lower mounting point bolts	2	M12×1.25×155	80~90	Apply 243 thread locker
Upper and lower fastening bolts for steering universal shaft 1	3	M8×1.25×30	30~40	Apply 243 thread locker
Upper and lower fastening bolts for steering universal shaft 2	2	M10×1.25×35	50~60	Apply 243 thread locker
EPS mounting bracket bolts	6	M8×16	27~33	Apply 243 thread locker
Swing arm reinforcement plate bolts	2	M10×1.25×20	40~50	
Front mounting bolts for front upper swing arm	2	M12×1.25×105	120~130	
Rear mounting bolts for front upper swing arm	2	M12×1.25×80	120~130	
Front mounting bolts for front lower swing arm	2	M12×1.25×80	120~130	
Rear mounting bolts for front lower swing arm	2	M12×1.25×160	120~130	
Front sway bar cover mounting bolts	4	M10×1.25×20	40~50	Apply 243 thread locker
Front sway bar ball pin mounting nuts	4	M12×1.25	120~130	
Upper swing arm joint fastening nuts	2	M12	80~90	
Lower swing arm joint fastening nuts	2	M10×1.25	60~70	
Front/Rear CV shaft lock nuts	4	/	220-250	
Tie rod end ball pin to knuckle lock nuts	2	M14×1.5	70~80	
Upper mounting bolts for front shock absorber	2	M12×1.25×60	120~130	
Lower mounting bolts for front shock absorber	2	M12×1.25×70	120~130	
Rear swing arm mounting bolts	2	M12×1.25×60	120~130	
Upper mounting bolts for rear shock absorber	2	M12×1.25×60	120~130	
Lower mounting bolts for rear shock absorber	2	M12×1.25×70	120~130	
Upper mounting bolts for rear sway bar cover	2	M10×1.25×20	40~50	Apply 243 thread locker
Lower mounting bolts for rear sway bar cover	2	M10×1.25×70	40~50	Apply 243 thread locker
Upper mounting point for rear sway bar ball pins	2	M12×1.25×60	120~130	

© CFMOTO Powersports, Inc. This manual is subject to all applicable copyright laws. Reproduction or duplication in any form, whole or in part, is strictly prohbited.

Item	Qty.	Specification	Torque (N•m)	Remarks
Lower mounting point for rear sway bar ball pins	2	M12×1.25×135	120~130	
Swing arm upper/lower/ adjustable links to frame bolts	6	M12×1.25×60	120~130	
Rear axle carrier mounting plate bolts	4	M10×1.25×30	40~50	Apply 243 thread locker
Upper/lower swing arm link and axle carrier bolts.	4	M12×1.25×75	120~130	
Swing arm adjustable link and axle carrier bolts	2	M12×1.25×70	120~130	
Upper/lower swing arm and rear axle carrierbolts	4	M12×1.25×80	120~130	
Front/rear cab sub-assembly bolts	12	M12×1.25×40	90~105	
Cab A&B-columns mounting bolts	8	M12×1.25×40	90~105	
Cab C-column mounting bolts	4	M12×1.25×80	90~105	
Wheel nut	20	/	110~120	
Front seat mounting bolt	8	M8×16	25~35	
Upper & lower mounting bolts for 3-point seat belt	4 (Z10) 8 (Z10-4)	7/16 in	40~50	
Seat belt retractor, lock bolts	4 (Z10) 8 (Z10-4)	7/16 in	40~50	
Brake caliper mounting bolts	8	M10×1.25×35	40~50	Apply 243 thread locker
Brake master cylinder mounting bolts	2	M8×1.25×25	25~35	Apply 243 thread locker
Brake pedal mounting bolts	3	M8×1.25×20	25~35	Apply 243 thread locker
Fuel tank sling bolts	2	M8×1.25×35	25	
Fuel tank sling nuts	2	/	25	
Door hinge mounting bolts	32	M8×1.25×20	30~40	
Door bolt mounting bolts	8	M8×1.25×25	22~30	
Steering wheel lock nut	1	M12×1.25	50~60	
Steering wheel bracket bolts	2	M8×1.25×28	20~30	
EPS bracket nuts	2	M8	27~33	Apply 243 thread locker
Horn mounting bolt	1	M8×1.25×14	20~30	

© CFMOTO Powersports, Inc. This manual is subject to all applicable copyright laws. Reproduction or duplication in any form, whole or in part, is strictly prohbited.

2.5.2 Torque Table - Engine / CVT / Transmission

Item	Qty.	Specification	Torque (N·m)	Remarks
Engine				
Crankcase bolts	5	M6	10	
	8	M10×1.25	20 N•m→40 N•m +90°	3 steps
	14	M8	20 N•m→27 N•m	2 steps
Magneto end cover bolts	14	M6	10	
	2	M8	27	
Connecting rod bolts	6	M8×0.75	20 ±2 N•m→ +(150° ±5°)	2 steps
Magneto bolt	1	M14×1.5	130	Apply 243 thread locker
Main oil gallery taper plug (cylinder body)	1	Rc 3/8	15	Apply 243 thread locker
Taper plug (cylinder body rear end cover)	1	Rz1/2	40	Apply silicone sealant to threads
Oil filter mounting bolt	1	3/4″	30	
Studs (cylinder head)	6	M8	10	Apply 272 thread locker
Cylinder head bolts	2	M6	10	
	8	M10	50 ±2 N•m +90°±5° +90°±5°	3 steps
Camshaft timing sprocket bolts	4	M6	15	Apply 243 thread locker
Tensioner bolts	2	M6	10	
Thread pin shaft (tension plate)	1	M8	20	Apply 243 thread locker
Chain upper guide bolts	2	M6	10	
Chain guard bolt	1	M5	4	Apply 243 thread locker

© CFMOTO Powersports, Inc. This manual is subject to all applicable copyright laws. Reproduction or duplication in any form, whole or in part, is strictly prohbited.

Item	Qty.	Specification	Torque (N·m)	Remarks
Engine				
Piston cooling nozzle bolts	3	M8×1	20	
Knock sensor bolt	1	M8	20	
Water pump bolts	5	M6	10	
Water pump idle gear sleeve bolt (water pump idle gear)	1	M6	12	Apply 243 thread locker
Thermostat cover bolts	3	M6	10	
Thermostat seat bolts	3	M6	10	
Small circulation return pipe bolt	1	M6	10	
Thermostat outlet pipe bolts	2	M6	10	
Magneto stator bolts	3	M6	10	Apply 243 thread locker
Wire press plate bolts	2	M5	6	Apply 243 thread locker
Overriding clutch bolts	6	M8	27	Apply 243 thread locker
Magneto plug cover bolts	3	M6	10	
Spark plugs	3	M10×1	14	
Coolant temperature sensor	1	M12×1.5	22	
Oil pressure switch	1	R3/8	20	Apply silicone sealant to threads
Oil Filter	1	3/4-16UNF-2B	17	
Oil suction filter bolts	2	M6	10	
Oil cooler bolts	4	M6	10	
Oil baffle bolts (lower crankcase)	5	M6	10	
Oil pump housing bolts	5	M6	10	
Oil pan bolts	16	M6	10	
Dipstick tube bolt	1	M10	45	
Oil pump driven sprocket bolt	1	M6	15	Left-hand thread Apply 243 thread locker
Magnetic drain bolts (engine oil and gear oil)	2	M12×1.5	25	
Balance shaft end cover bolts	3	M6	10	
Front hook screw (cylinder head)	1	M8	27	
Rear hook screw (cylinder head)	2	M8	27	
Cam bearing cover bolts	16	M6	5→8→12	3 steps
Camshaft position sensor bolt	1	M6	10	

© CFMOTO Powersports, Inc. This manual is subject to all applicable copyright laws. Reproduction or duplication in any form, whole or in part, is strictly prohbited.

Item	Qty.	Specification	Torque (N·m)	Remarks
Timing chamber cover bolts	6	M6	10	
Cylinder head cover bolts	7	M6	10	
Oil and gas separator bolts	5	M6	10	
Ignition coil bolts	3	M6	10	
Starter motor bolts	2	M6	10	
Gearbox connecting bracket 2 bolts	1	M10	45	
	2	M8	27	
Gearbox fixing bolts	6	M8	27	
Turbocharger nuts	8	M8	25	
CVT case bolts	2	M10×1.25	45	Apply 243 thread locker
	2	M8	27	
	4	M6	10	
CVT case cover bolts	12	M6	10	
Drive pulley bolt	1	M14×1.5	130	TMT CVT
Driven pulley bolt	1	M10×1.5	85	TMT CVT
Intake manifold bolts	8	M6	10	
Intake manifold bracket bolts	3	M8	27	
E-throttle body bolts	4	M6	10	
Fuel pipe bolts	2	M6	10	
Boost pressure temperature sensor bolts	2	M6	10	
Intake pressure relief valve bolts	3	M6	10	
Intercooler outlet pipe bracket bolt	1	M6	10	
Turbocharger nuts	6	M8	16→35	
Turbocharger bolts	2	M8	16→35	
Turbocharger bracket bolts	3	M8	27	
Turbocharger heat shield bolts	7	M6	10	
Turbocharger oil inlet pipe bolts	1	M6	10	
	1	M12×1.5	40	
	1	M10×1	30	
Turbocharger oil return pipe bolts	3	M6	10	
Turbocharger water inlet pipe bolts	1	M6	10	
	2	M12×1.5	30	
Turbocharger water outlet pipe bolts	1	M6	10	
	1	M12×1.5	30	

© CFMOTO Powersports, Inc. This manual is subject to all applicable copyright laws. Reproduction or duplication in any form, whole or in part, is strictly prohbited.

Item	Qty.	Specification	Torque (N·m)	Remarks
CVT Drive pulley (TMT)				
Drive pulley guide disk bolts	6	M6	13.5	
CVT Driven pulley (TMT)				
Hex socket countersunk head screws (CAM screws)	4		11 ~ 14	Apply 243 thread locker
Transmission / Gearbox				
Bearing press plate bolts	3	M6	14	Apply 272 thread locker
Bearing press plate bolts	5	M8	35	Apply 272 thread locker
Nut (driven bevel gear shaft)	1	M34×1.5	200	left-hand thread, Apply 272 thread locker
Gearbox bolts	16	M8	10→20→26	
Shift positioning swing arm bolt	1	M6	10	Apply 243 thread locker
Positioning cam screw	1	M6	10	Apply 243 thread locker
Nut (parking gear)	1	M22×1.5	170	Apply 243 thread locker
Gearshift cover bolts	10	M6	10	
Nut (drive bevel gear)	1	M26×1.5×17.5	250	left-hand thread
	1	M26×1.5	300	left-hand thread, Apply 272 thread locker
Bevel gear cover bolts	10	M8	10→20→35	Apply 272 thread locker
Nut (main shaft)	1	M34×1.5×11.5	200	Apply 272 thread locker
Gearbox input shaft cover bolts	7	M6	10	
Speedometer sensor bolt	1	M6	10	Apply 243 thread locker
Front hook screw	1	M8	27	
Gear sensor bolts	2	M6	10	Apply 243 thread locker
Gearbox bracket 1 bolts	4	M8	26	

2.5.3 General Fastener Torque Values

Type	Torque N·m	Type	Torque N·m
M5 bolts and nuts	5	M5 screws	4
M6 bolts and nuts	10	M6 screws	9
M8 bolts and nuts	20 - 30	M6SH flange bolts	10
M10 bolts and nuts	30 - 40	M6 flange bolts and nuts	12
M12 bolts and nuts	40 and 50	M8 flange bolts and nuts	20 - 30
		M10 flange bolts and nuts	30 - 40

© CFMOTO Powersports, Inc. This manual is subject to all applicable copyright laws. Reproduction or duplication in any form, whole or in part, is strictly prohbited.

2.6 Greases and Sealants

Area	Notes	Grease
Brake Pedal pivot Swing arm pivots Steering column inner circumference Seat lock moving parts Sway bar pivots		Multipurpose lithium grease

Lubrication of Control Cables, Bearings and Each Rotating Part

Area	Notes	Oil
Front CV shaft and hub unit mating splines	Lubricate	Evenly apply approx. 1.5 g of grease
Rear CV shaft and hub unit mating splines	Lubricate	Evenly apply approx. 1.5 g of grease
Rear CV shaft and transmission mating splines	Lubricate	Evenly apply approx. 1.5 g of lubricating oil
Front drive shaft and engine mating splines	Lubricate	Evenly apply approx. 1.5 g of grease
Front CV shaft and front gear case assembly mating splines	Lubricate	Evenly apply approx. 1.5 g of grease
Door Cables / Latches	Lubricate	Apply lubricating oil at regular intervals or after use in extreme wet environments

© CFMOTO Powersports, Inc. This manual is subject to all applicable copyright laws. Reproduction or duplication in any form, whole or in part, is strictly prohibited.

2.7 Engine Service Supplies

Engine service supplies include engine oil, gear oil, grease, coolant, flat surface sealant, thread locker, surface adhesive, etc.

Product Type	Specification	Area	Remarks
Oil	SAE 5W-40 synthetic oil, API classification SP or higher (refer to the selection chart for viscosity grades)	Rotating parts inside cylinder, sliding parts in crankcase, rotating and sliding parts inside cylinder head See lubrication system schematic for details.	
Gear oil	80W-90 GL-5	Gearcase	280 mL
Gear oil	75W-90 GL-5	Transmission	3.0 L
Molybdenum lubricating oil		Piston pin, valve stem, valve stem seal, camshaft	
Grease	No. 3 MoS 2 lithium grease	Sealing faces of oil seal lips, O-rings and other rubber sealing materials, bearings with a seal	
Coolant	-35°C freeze protection level, anti-corrosion, high boiling point coolant	Cooling system, water seal installation	CFMOTO uses Organic Acid Technology (OAT) coolant in all liquid-cooled engines. Do not mix with inorganic (IAT) coolant.
Flat-surface sealant		The mating surface of the rubber sealing sleeve on the external cable of the magneto stator and the lower crankcase and the rear end cover, the mating surface of the lower crankcase and the cylinder body, the mating surface of the balance shaft end cover and the cylinder body, the mating surface of the oil pan and the lower crankcase, the mating surface of the timing chamber cover and the cylinder head, the mating surface of the LH and RH boxes of the gearbox, the mating surface of the LH box and the input shaft cover of the gearbox, and the gearbox LH box and gearbox bevel gear cover mating surface, gearbox RH box and gearbox shift room cover mating surface, each three mating surface.	
243 / 272 thread locker		Bolt threads (where indicated)	
648 surface adhesive		Joint of cylinder body to lower crankcase mounting oil seal	

© CFMOTO Powersports, Inc. This manual is subject to all applicable copyright laws. Reproduction or duplication in any form, whole or in part, is strictly prohibited.

3.1 Maintenance Information 03-2
3.1.1 Operation Cautions 03-2
3.2 Maintenance Schedule 03-3
3.2.1 Pre-ride Maintenance Checklist 03-3
3.2.2 Break-In Maintenance Checklist 03-4
3.2.3 Periodic Maintenance Schedule 03-5
3.3 Engine Maintenance 03-8
3.3.1 Valve Clearance Inspection and Adjustment 03-8

© CFMOTO Powersports, Inc. This manual is subject to all applicable copyright laws. Reproduction or duplication in any form, whole or in part, is strictly prohbited.

3.1 Maintenance Information

3.1.1 Operation Cautions

⚠CAUTION:

- **Exhaust gas contains toxic components such as carbon monoxide (CO), do not run the engine for a long time in a closed or poorly ventilated place.**
- **Gasoline is highly flammable. No smoking or fire in the work place. Pay attention to flames and electric sparks. Gasoline vapors have a risk of explosion. Maintenance must be done in a well-ventilated area.**
- **Moving parts might pinch hands or clothes.**

⚠CAUTION:

- **The vehicle must be placed on flat and stable ground before performing maintenance.**

© CFMOTO Powersports, Inc. This manual is subject to all applicable copyright laws. Reproduction or duplication in any form, whole or in part, is strictly prohbited.

3.2 Maintenance Schedule

The following icons are used to mark special circumstances in the maintenance schedule:
► = Severe Use Item. Reduce interval by 50% on vehicles subjected to severe use.
■ = Have an authorized dealer perform repairs that involve this component or system.
● = Emissions related components. Have an authorized dealer perform repairs that involve this component or system.

3.2.1 Pre-ride Maintenance Checklist

Perform these inspections before operating the vehicle:

Item		Maintenance Before Operation			Notes
		Hour	Schedule	Miles (km)	
■	Steering system	--	Pre-ride	--	Visually inspect, test, or check components. Make adjustments and/or schedule repairs when required.
■	Throttle return	--	Pre-ride	--	
	Front suspension and axles	--	Pre-ride	--	
	Rear suspension and axles	--	Pre-ride	--	
	Tires	--	Pre-ride	--	
	Brake fluid level	--	Pre-ride	--	
	Coolant level	--	Pre-ride	--	
	Brake lever/foot pedal function	--	Pre-ride	--	
	Brake system function	--	Pre-ride	--	
	Wheels/fasteners	--	Pre-ride	--	
	Engine oil level	--	Pre-ride	--	
	Transmission oil level	--	Pre-ride	--	
►	Air filter/Air box and connections	--	Pre-ride	--	Visually inspect. Replace filter when dirty.
►	Headlight aim / General lighting and turn lights (optional)	--	Pre-ride	--	Inspect Inspect. Adjust or replace lights when necessary.
►	Air box sediment tube	--	Pre-ride	--	Inspect. If deposits are visible, clean intake tubes, air box, and replace air filter.
►	CVT sediment tube	--	Pre-ride	--	Inspect. If deposits are visible, drain / clean the CVT or have it serviced by a dealer.
►	Radiator	--	Pre-ride	--	Inspect for mud or debris blocking airflow. Clean surfaces when necessary.

© CFMOTO Powersports, Inc. This manual is subject to all applicable copyright laws. Reproduction or duplication in any form, whole or in part, is strictly prohibited.

3.2.2 Break-In Maintenance Checklist

Perform the following maintenance at the break-in period that arrives first:

Item		Break-in Maintenance (Perform at the interval that arrives first)			Notes
		Hour	Schedule	Miles (km)	
	General lubrication	20h	--	300 (500)	Lubricate all grease points, pivots, cables, etc.
	Engine oil/oil filter	20h	--	300 (500)	Change oil and filter.
►	Engine air filter	20h	--	300 (500)	Inspect, replace if dirty, do not clean.
	Front gear case oil	20h		300 (500)	Check level. Inspect for leaks.
	Coolant	20h	--	300 (500)	Check level. Inspect for leaks.
	Transmission oil	20h	--	300 (500)	Inspect level.
►	Brake pads/Brake discs	20h	--	300 (500)	Inspect brake pad and thickness of brake discs.
	Battery	20h	--	300 (500)	Check terminals. Clean and test battery condition as necessary.
■	Idle condition	20h	--	300 (500)	Inspect for proper rpm. See dealer for service if out of spec or erratic.
■	Steering/Wheel Alignment	20h	--	300 (500)	Inspect steering system. See dealer for service if wheel alignment is required.
►	Foot brake/Hand brake (if equipped)	20h	--	300 (500)	Inspect function. Adjust as necessary.
■	Gear cases, CV shafts, Propshafts	20h	--	300 (500)	Inspect for leaks.
	Engine hoses, gaskets and seals	20h	--	300 (500)	Inspect for leaks.

© CFMOTO Powersports, Inc. This manual is subject to all applicable copyright laws. Reproduction or duplication in any form, whole or in part, is strictly prohbited.

3.2.3 Periodic Maintenance Schedule

Perform maintenance at the interval that arrives first after the break-in period:

	Item	Periodic Maintenance Intervals (Perform at the interval that arrives first)			Notes
		Hour	Schedule	Miles (km)	
▶	Brake pads, brake disc	20h	Monthly	300 (500)	Inspect thickness of brake pads and the brake discs.
	Battery	200h	-	1800 (3000)	Check terminals. Clean and test battery condition as necessary.
	Engine hoses, gaskets and seals	20h	-	900 (1500)	Inspect for leaks.
▶	Air filter	100h	12M	900 (1500)	Always inspect pre-ride. Inspect frequently if subjected to severe use. Replace if dirty. Do not clean.
▶	CVT air intake filter screen / filter	50h	-	900 (1500)	Clean filter screen or filter, replace it with a new one if necessary.
▶	General lubrication	50h	3M	600 (1000)	Lubricate all accessories, oil points, cables, etc.
▶	Front gear case oil	100h	12M	1800 (3000)	Inspect level. Change yearly if hours or distance interval is not met.
▶	Engine oil / oil filter	100h	12M	1800 (3000)	Inspect for color change. If strainer is dirty, clean or replace. Change yearly if hours or distance interval is not met.
	Cooling system	50h	12M	900 (1500)	Perform pressure leak test annually
▶	Aluminum top roof mounting bolt (if Equipped)	50h	6M	900 (1500)	Inspect the bolt for looseness. Follow the torque to secure the bolt if necessary.
▶	Radiator	20h	6M	300 (500)	Inspect, clean external surfaces. Clean more frequently if subjected to severe use.
■	Steering system	50h	6M	300 (500)	Inspect. Lubricate.
▶	Front suspension	50h	6M	300 (500)	Lubricate, check fasteners
▶	Rear suspension	50h	6M	300 (500)	Lubricate, check fasteners
▶	Gear shift	50h	1M	1800 (3000)	Inspect, lubricate, and adjust as necessary.

© CFMOTO Powersports, Inc. This manual is subject to all applicable copyright laws. Reproduction or duplication in any form, whole or in part, is strictly prohbited.

►■	Throttle body	100h	12M	1800 (3000)	Inspect.Clean carbon deposits. Inspect frequently if subjected to severe use.
►■	CVT drive belt	50h	6M	900 (1500)	Inspect. Replace as necessary. See dealer for service.
■	CVT drive and driven pulleys	50h	6M	900 (1500)	Clean and inspect pulleys. Replace worn parts. See dealer for service.
	Fuel filter and fuel hoses	100h	24M	1800 (3000)	Inspect routing condition. Replace filter and high-pressure hoses every 4 years.
	Cooling hoses	100h	--	900 (1500)	Inspect routing and condition.
●	Fuel system	100h	12M	600 (1000)	Inspect fuel tank, cap, fuel pump, and fuel pump relay.
	Spark plug	200h	24M	3600 (6000)	Inspect. Replace if worn or fouled.
►■	Valve clearance	200h	24M	3600 (6000)	Inspect, if the valve clearance is not within the required range, adjust it to the proper range.
■	Engine mounts	100h	12M	900 (1500)	Inspect condition.
	Exhaust pipe and spark arrestor	100h	12M	900 (1500)	Inspect. Clean spark arrestor.
►	Wiring, fuses, connectors, relays, and cables	100h	12M	900 (1500)	Inspect wire routing for wear, and security. Apply dielectric grease as necessary to connectors subjected to water, mud, etc.

© CFMOTO Powersports, Inc. This manual is subject to all applicable copyright laws. Reproduction or duplication in any form, whole or in part, is strictly prohbited.

Item		Periodic Maintenance Intervals (Perform at the interval that arrives first)			Notes
		Hour	Schedule	Miles (km)	
►■	Wheel bearings	100h	12M	900 (1500)	Inspect for noise or looseness. Replace as necessary.
►	Safety belts	100h	12M	1800 (3000)	Visually inspect belts and test latches. Clean latch mechanism more often if used in severe conditions. Replace as necessary.
►	Transmission oil	200h	24M	3600 (6000)	Inspect level. Change yearly if hours or distance interval is not met.
	Coolant	200h	24M	3600 (6000)	Change coolant every 2 years if hours or distance interval is not met.
►	Brake fluid	200h	24M	3600 (6000)	Inspect fluid for color change. Change fluid every two years.
►	Doors	100h	12M	900 (1500)	Inspect the door latches for proper function. If the door has been in severe conditions, clean it frequently and lubricate it. Replace components if a door latch is stuck severely.
	Idle condition	--	12M	--	Inspect for proper rpm. See dealer for service if out of spec or erratic.
■	Steering/Wheel alignment	--	12M	--	Inspect steering system. See dealer for service whenever steering parts or wheel alignment are required.
►	Foot brake height	--	12M	--	Check, adjust height
►	Parking brake	--	12M	300 (500)	Inspect parking brake function. See dealer for service if tightness adjustment is required.
►■	Shocks (USA Market)	--	--	2500 (4023)	Contact an authorized dealer or an official FOX service center

© CFMOTO Powersports, Inc. This manual is subject to all applicable copyright laws. Reproduction or duplication in any form, whole or in part, is strictly prohbited.

3.3 Engine Maintenance

3.3.1 Valve Clearance Inspection and Adjustment

NOTE: For better understanding, certain illustrations show the engine out of the vehicle.

Prework:

Refer to chapter 04 “CVT and Transmission”and remove the CVT cover. (Required for turning the crankshaft at the primary pulley bolt).

Refer to chapter 06 "Vehicle and Body Panels" and remove:

— Seats (single-row - Z10) or seats in the rear row (double-row - Z10-4)
— LH/RH threshold deco plates
— LH/RH side panel (single-row - Z10)
— LH/RH base panel (single-row - Z10) or LH/RH lower panel (double-row - Z10-4)
— Cab LH/RH joint
— Plastic rear cargo box assembly
— Cargo box LH/RH side cover inner plate
— LH/RH upper filter panel assembly
— Grill assembly
— Cargo box front baffle
— Rear lower panel
— Rear LH/RH side panel assembly
— LH/RH side inner panel
— Front LH/RH filter panel
— Baffle front service cover
— Air filter service cover
— Seat rear baffle
— Engine heat shield
— Radiator LH/RH baffle
— LH/RH air inlet port deflector

Place a suitable container under the water pump to collect the coolant.
Loosen the clamp [1].
Disconnect the engine inlet pipe [2] from the water pump cover and drain the coolant completely.

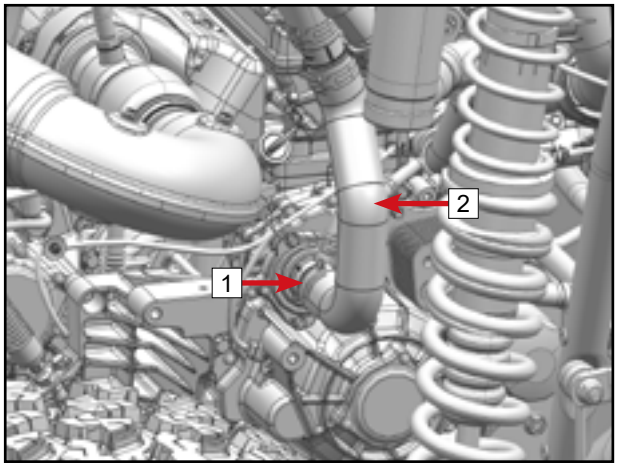

© CFMOTO Powersports, Inc. This manual is subject to all applicable copyright laws. Reproduction or duplication in any form, whole or in part, is strictly prohibited.

Loosen the clamp [1], and unplug the pipe [2].

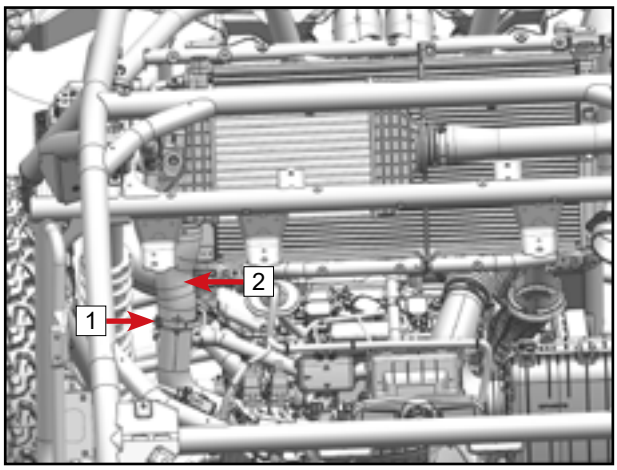

Loosen the clamp [1], and unplug the intercooler intake hose 1 [2] from the turbocharger.

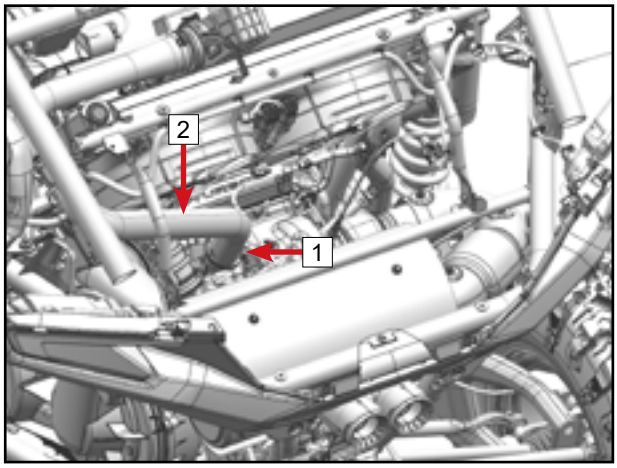

Loosen the clamp [1], and unplug the engine outlet pipe [2].

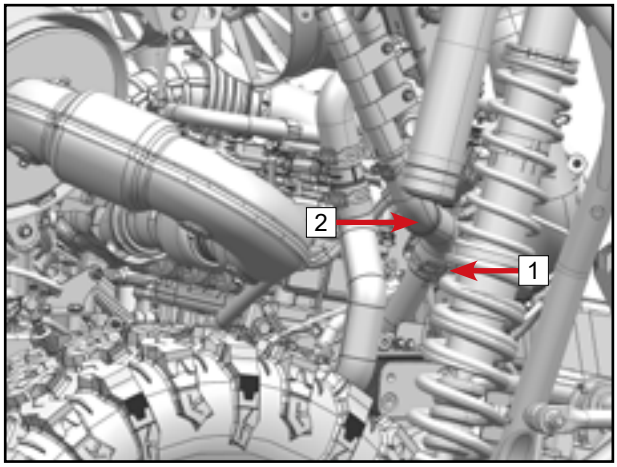

Loosen the clamp [1], and unplug the outlet pipe [2] of the turbocharger.

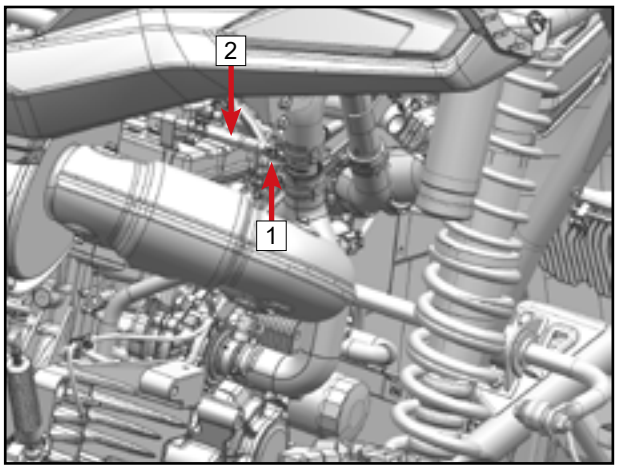

© CFMOTO Powersports, Inc. This manual is subject to all applicable copyright laws. Reproduction or duplication in any form, whole or in part, is strictly prohibited.

Loosen the clamp [1], and unplug the engine degassing tube [2].

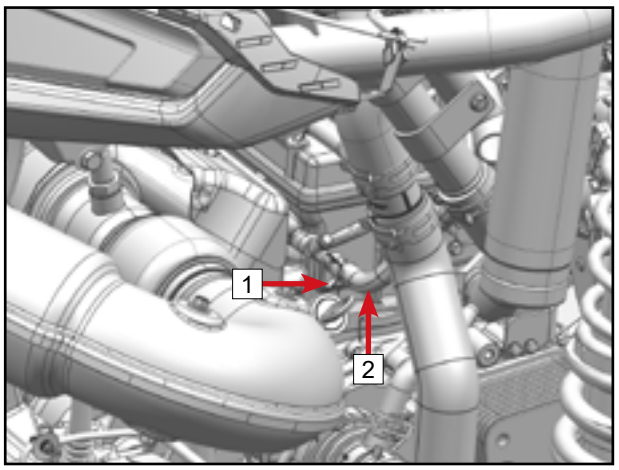

Unplug the radiator connector [1].
Separate all the relevant tie bands [2] from the intercooler connecting bracket [3] and the intercooler reinforcing pipes [4].

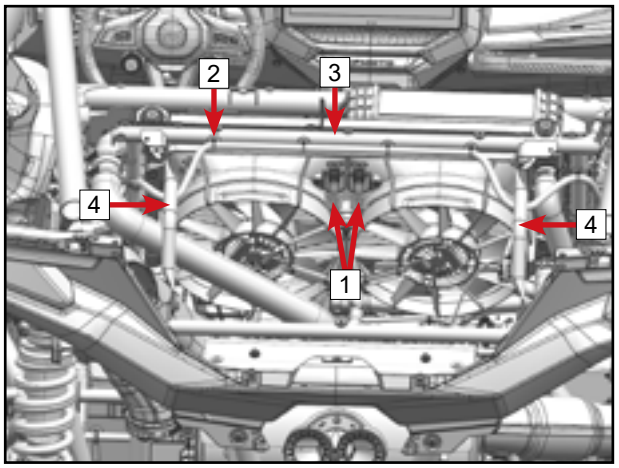

Remove the bolts [1], and separate the engine expansion tank [2] from the frame.

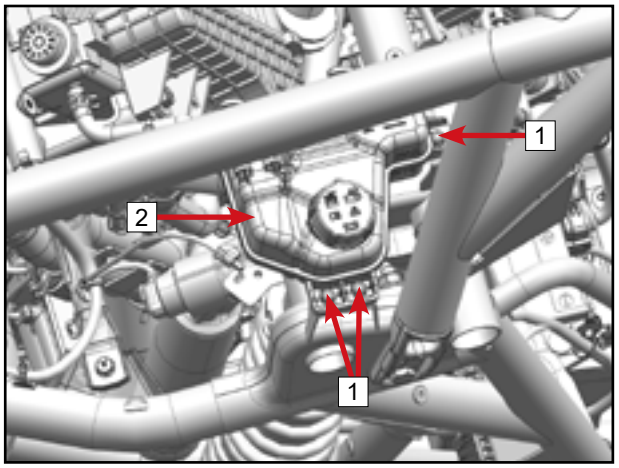

© CFMOTO Powersports, Inc. This manual is subject to all applicable copyright laws. Reproduction or duplication in any form, whole or in part, is strictly prohibited.

Loosen the clamp 1.
Remove bolt 2 and 3.
Remove air filter air inlet pipe assembly 4.

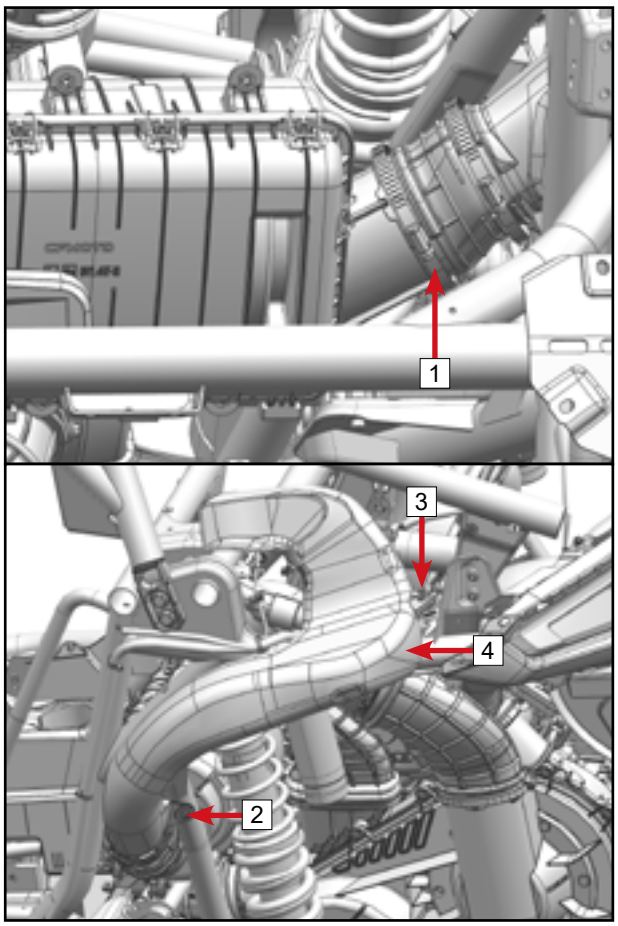

Separate the wire harness tie 1 from the CVT air inlet pipe.
Loosen the clamp 2.
Remove bolt 3.
Remove CVT air inlet pipe assembly 4.

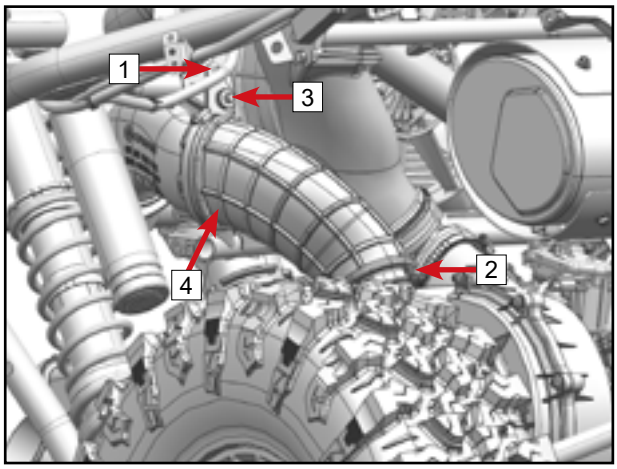

© CFMOTO Powersports, Inc. This manual is subject to all applicable copyright laws. Reproduction or duplication in any form, whole or in part, is strictly prohibited.

Remove bolts [1].
Remove the intercooler reinforcing pipe [2].

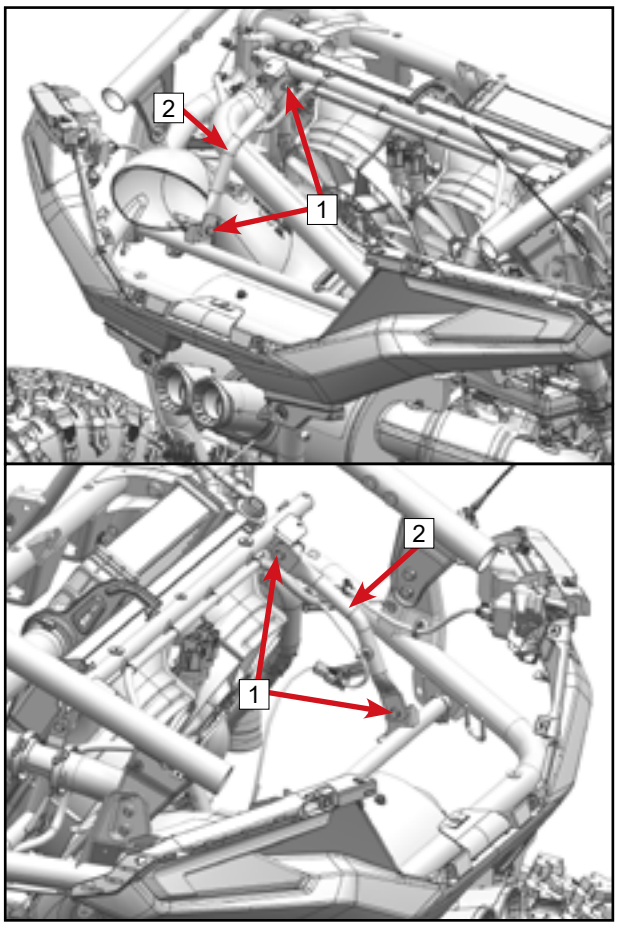

Cut off the tie band [1] and separate the wire harness from the bracket.
Remove bolts [2].
Remove intercooler connection bracket and cooling system [3].

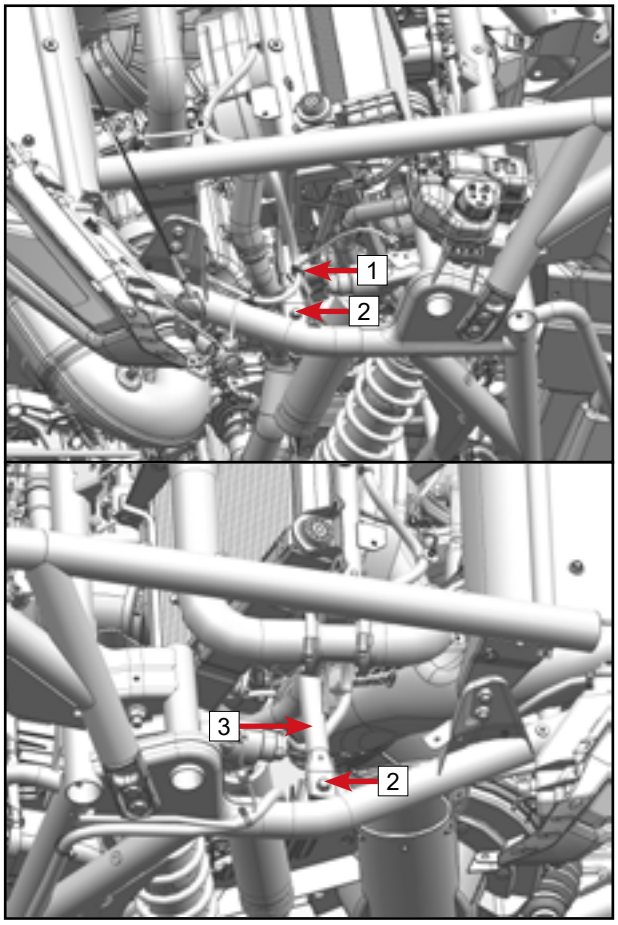

© CFMOTO Powersports, Inc. This manual is subject to all applicable copyright laws. Reproduction or duplication in any form, whole or in part, is strictly prohibited.

Loosen the clamp [1].
Unplug crankcase breather [2] from oil gas separator.

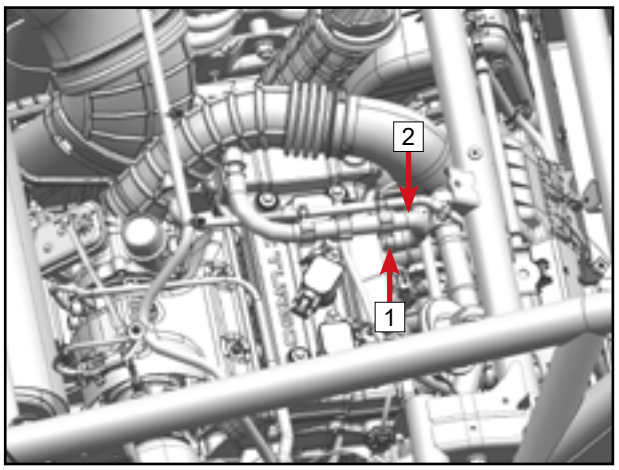

Disconnect ignition coil connectors [1].

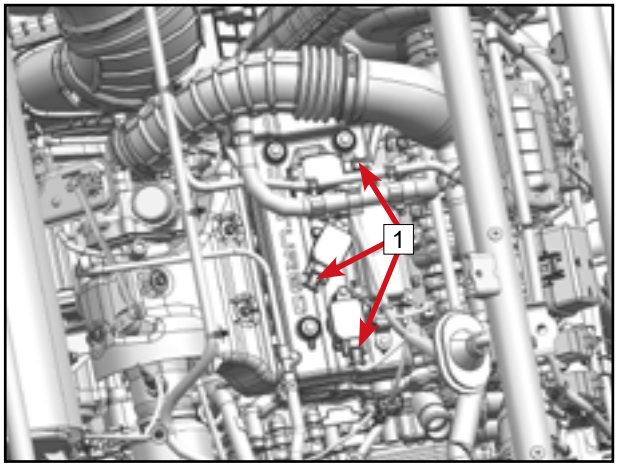

Remove bolt [1] and separate bracket [2] from cylinder head cover.
Remove bolt [3] and separate negative wire [4] and bracket [5] from cylinder head cover.

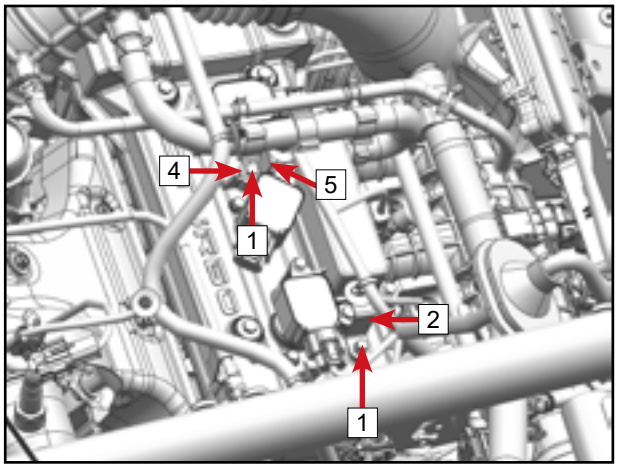

Remove bolts [1].
Remove ignition coils [2].
Remove the bolt [3] and separate the pipe [4] from the cylinder head cover.

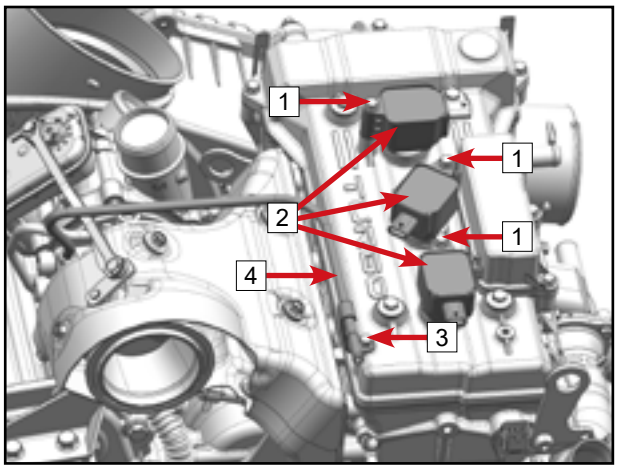

© CFMOTO Powersports, Inc. This manual is subject to all applicable copyright laws. Reproduction or duplication in any form, whole or in part, is strictly prohibited.

Remove bolts [1].
Remove bolts [2] and washers [3].
Remove cylinder head cover bolt [4] and seal ring.
Remove cylinder head cover assembly [5] and cylinder head cover seal ring.

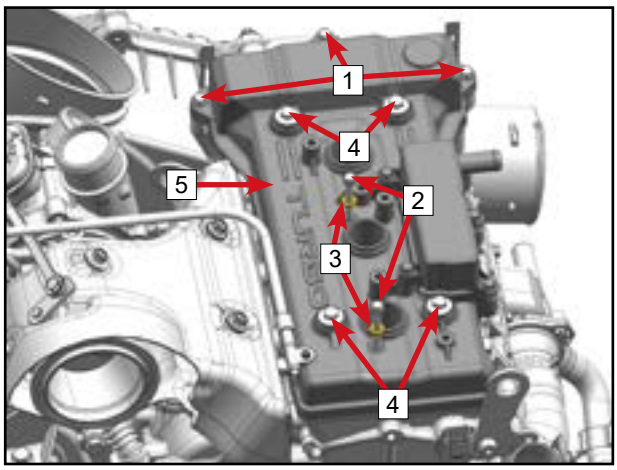

Valve Clearance Inspection:

NOTE: Check and adjust valve clearances on a cold engine.

1. Using a socket wrench on the drive pulley bolt, turn the crankshaft until the exhaust camshaft lobes on a cylinder are pointed upward.
2. Measure each valve clearance with a feeler gauge and compare to the exhaust valve clearance specification.
3. On the same cylinder, turn the crankshaft until the intake camshaft lobes are pointed up.
4. Measure each valve clearance with a feeler gauge and compare to the intake valve clearance specification.
5. Repeat the steps for remaining cylinders.

Valve Clearance (Cold Engine)	
IN	0.12 ~ 0.18 mm (0.00472 ~ 0.00709 in.)
EX	0.32 ~ 0.38 mm (0.01260 ~ 0.01496 in.)

If a valve clearance is not within the specified range, record the clearance and adjust it (Refer to Chapter 05 - Section 5.4.12).

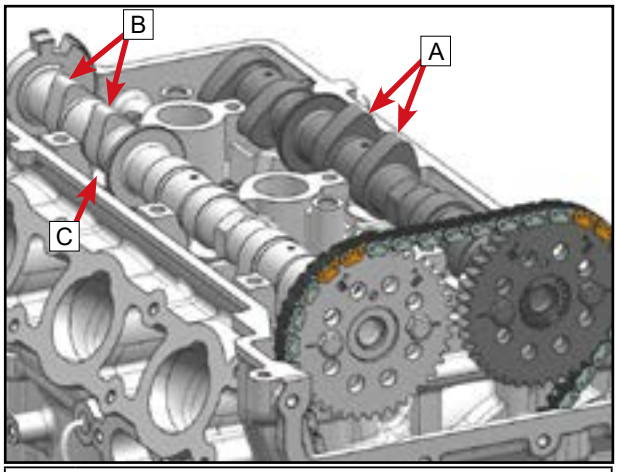

Camshaft Lobe Positioning (Components removed for clarity)	
A	Exhaust lobes point upward before measuring a cylinder
B	Intake lobes point upward before measuring a cylinder
C	Feeler gauge measuring location Camshaft to valve stem - Each cylinder

© CFMOTO Powersports, Inc. This manual is subject to all applicable copyright laws. Reproduction or duplication in any form, whole or in part, is strictly prohibited.

Adjusting Valve Clearance:

Use a wrench to rotate the camshaft and place it at the TDC of cylinder 1, make sure that the position of the each mark should be as shown on the right:

The mark IN [1] on the intake side and the mark EX [2] on the exhaust side both face upwards.

The line mark [3] on the timing sprocket of the camshaft on the intake side is flush with the sealing surface [5] of the cylinder head.

Line mark [4] on the exhaust side is flush with the cylinder head sealing surface [5].

Refer to Chapter 05 “Engine Overhaul” - “Camshafts Assembly Removal” and remove:
— Tensioner assembly
— Chain upper guide assembly
— Intake side camshaft bearing cover (IN)
— Exhaust side camshaft bearing cover (EX)
— Cam bearing front cover
— Exhaust camshaft assembly
— Intake camshaft assembly

Replace the valve tappet(s) with one of appropriate thickness based on the recorded valve clearances. (Refer to Chapter 05 - Section 5.4.12).

Install the camshaft assemblies at the TDC position of cylinder 1.

Recheck valve clearances. Adjust as necessary until requirements are met.

Refer to Chapter 05 “Engine Assembly” - “Camshaft Assembly Installation” and install:
— Camshaft assemblies at the TDC position of cylinder 1
— Intake side camshaft bearing cover (IN)
— Exhaust side camshaft bearing cover (EX)
— Cam bearing front cover
— Tensioner assembly

Remove residual sealant.
Thoroughly clean the sealing surface.
Apply a suitable amount of 5900 flange sealant evenly to the seams [1].

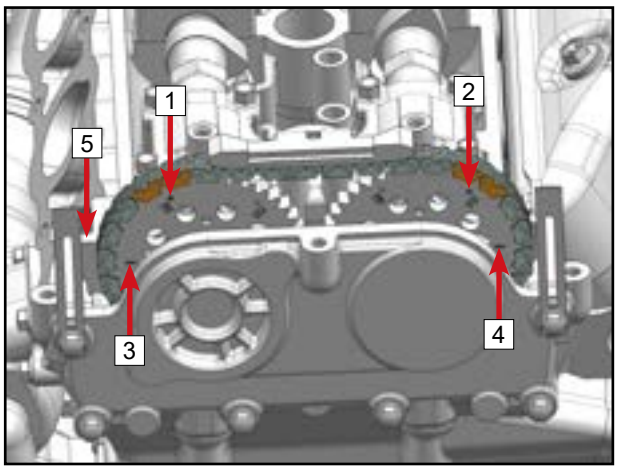

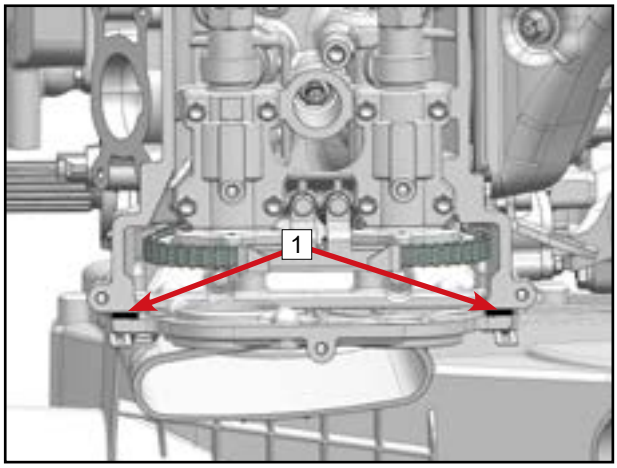

© CFMOTO Powersports, Inc. This manual is subject to all applicable copyright laws. Reproduction or duplication in any form, whole or in part, is strictly prohibited.

Install cylinder head cover assembly [1] and cylinder head cover seal ring.
Install cylinder head cover bolt [2] and seal ring [3], then diagonally cross tighten to the specified torque.

Cylinder Head Cover Bolt [2]	
Torque	10 N•m (7.3 ft-lb.)

Install bolt [4] and washer [5], tighten to specified torque.

Bolt [4]	
Torque	10 N•m (7.3 ft-lb.)

Install bolt [6], tighten to specified torque.

Bolt [6]	
Torque	10 N•m(7.3 ft-lb.)

Pay attention to seal belt [A] installation direction.

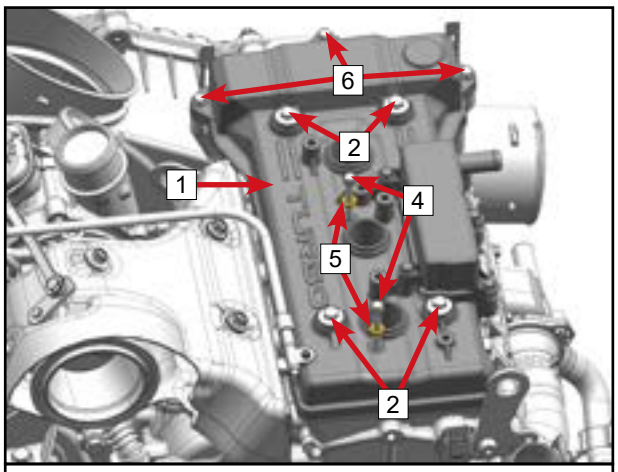

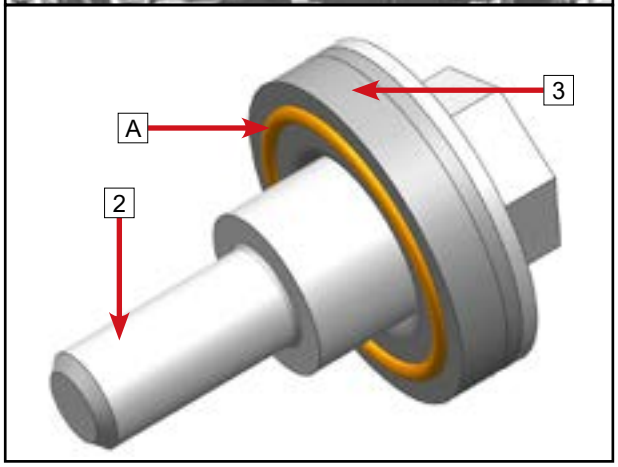

Install ignition coil [2].
Install bolt [1], tighten to specified torque.

Ignition Coil Bolt [1]	
Torque	10 N•m (7.3 ft-lb.)

Install bolt [3] and secure pipe [4] to the cylinder head cover.

Bolt [3]	
Torque	10 N•m(7.3 ft-lb.)

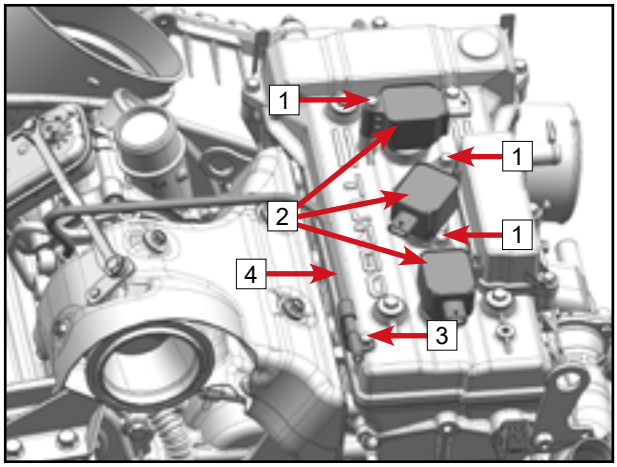

Place bracket [2] in place.
Install and tighten bolt [1].
Place the bracket [5] and negative wire [4] in place.
Install and tighten bolt [3].

Bracket Bolt [1] [3]	
Torque	10 N•m (7.3 ft-lb.)

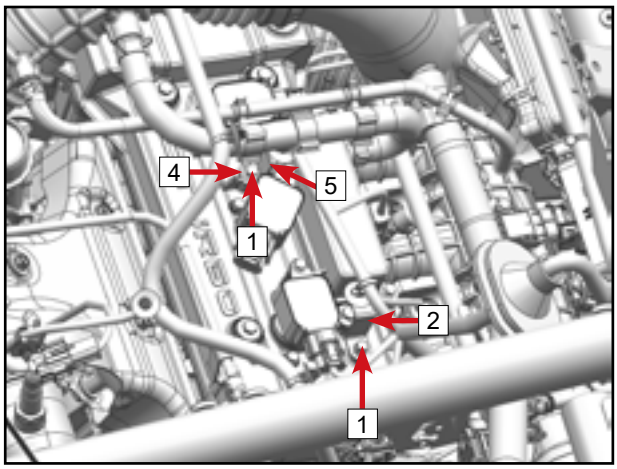

© CFMOTO Powersports, Inc. This manual is subject to all applicable copyright laws. Reproduction or duplication in any form, whole or in part, is strictly prohibited.

Plug in the ignition coil connector 1.

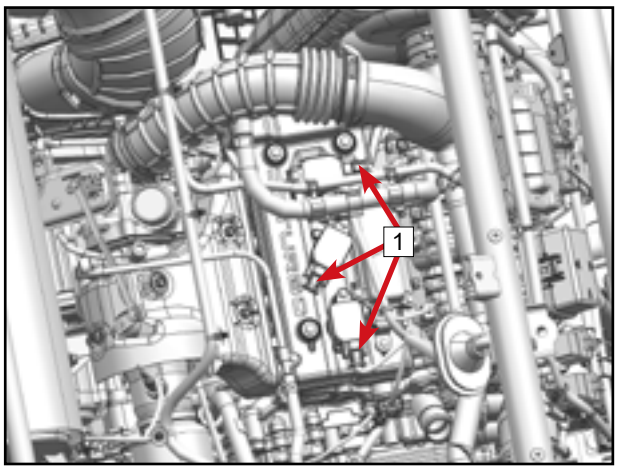

Install crankcase breather 2 to the oil and gas separator, then tighten clamp 1.

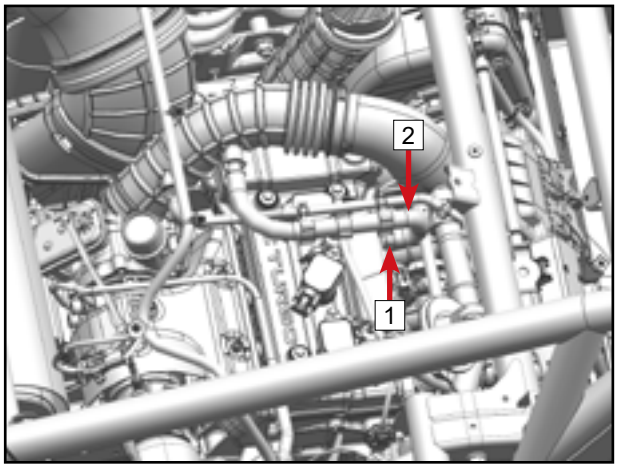

Place intercooler connection bracket and cooling system 3 in place.
Install bolts 2 and tighten to specified torque.

Intercooler Connection Bracket Bolt 1	
Torque	25 ~ 30 N•m (18.4 ~ 22.1 ft-lb.)

Install the tie band 1, and fix the wire harness on the bracket.

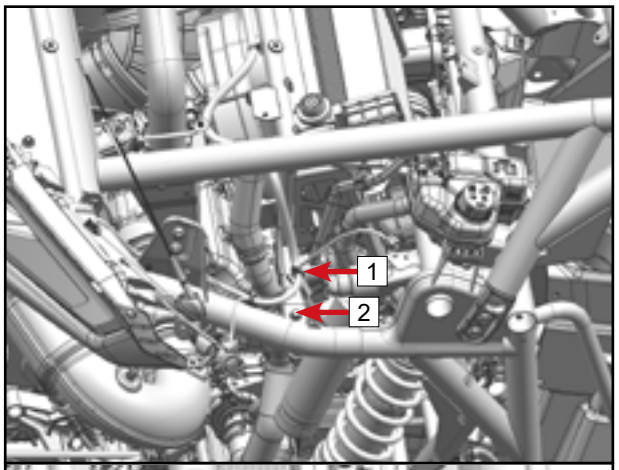

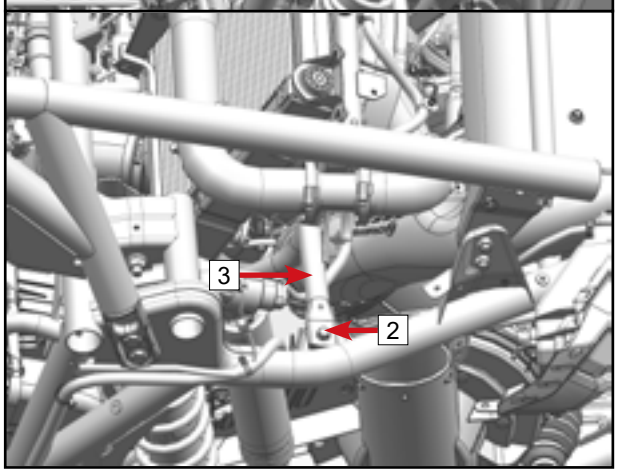

© CFMOTO Powersports, Inc. This manual is subject to all applicable copyright laws. Reproduction or duplication in any form, whole or in part, is strictly prohibited.

Place the intercooler reinforcing pipe [2] in position.
Install the bolts [1] and tighten to the specified torque.

Intercooler Reinforcing Pipe Bolt [1]	
Torque	25 ~ 30 N•m (18.4 ~ 22.1 ft-lb.)

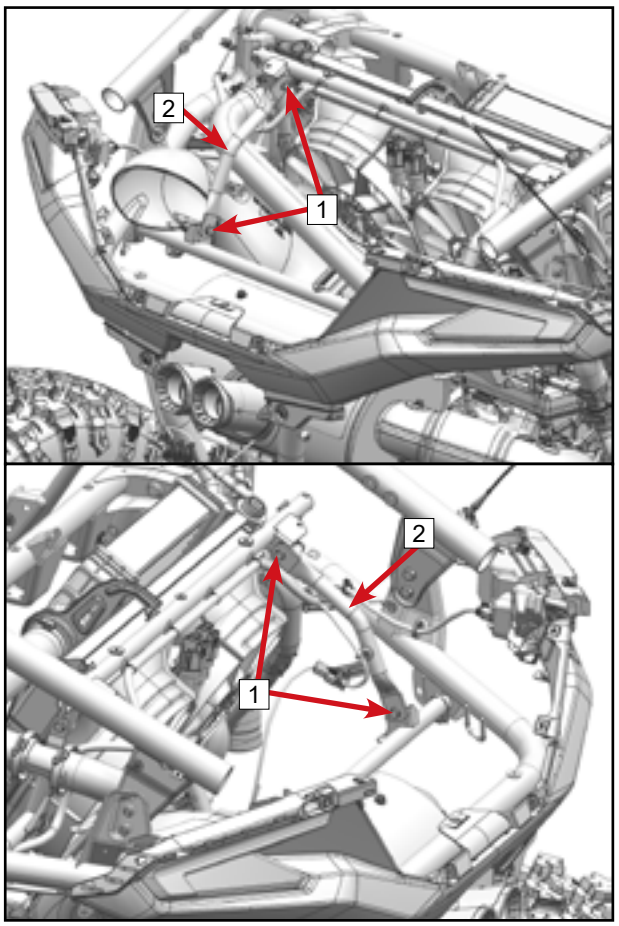

Install CVT air inlet pipe assembly [4] to CVT case cover.
Install bolt [3].
Tighten the clamp [2].
Insert the tie band [1] into the CVT air inlet pipe hole.

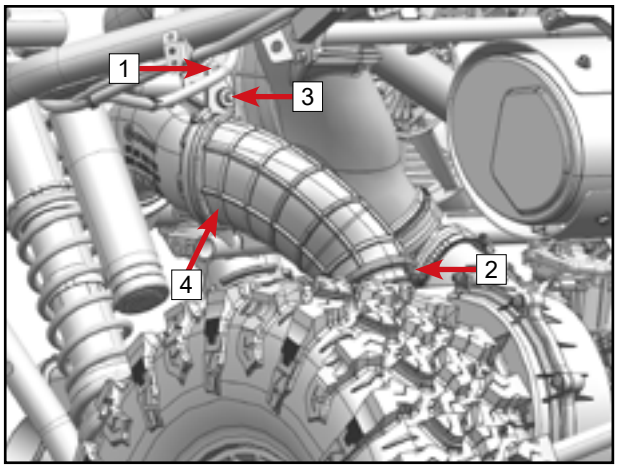

© CFMOTO Powersports, Inc. This manual is subject to all applicable copyright laws. Reproduction or duplication in any form, whole or in part, is strictly prohibited.

Place the air filter inlet pipe assembly [4] in place.
Make sure the tab [A] snap into the slot [B].
Install bolts [2] and [3] to secure air filter inlet pipe assembly [4].
Tighten the clamp [1].

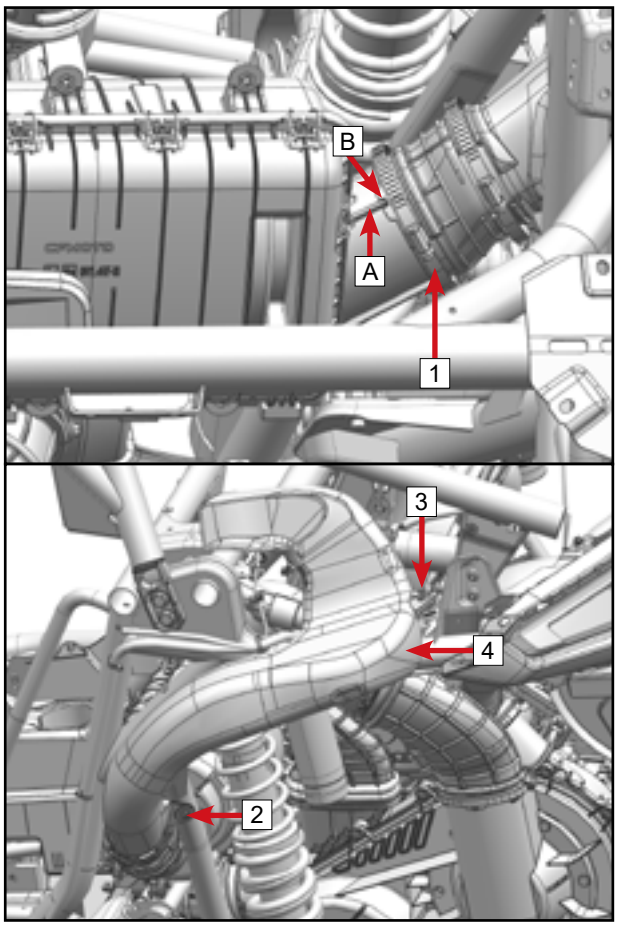

Fix the engine expansion tank [2] to the frame with bolts [1].

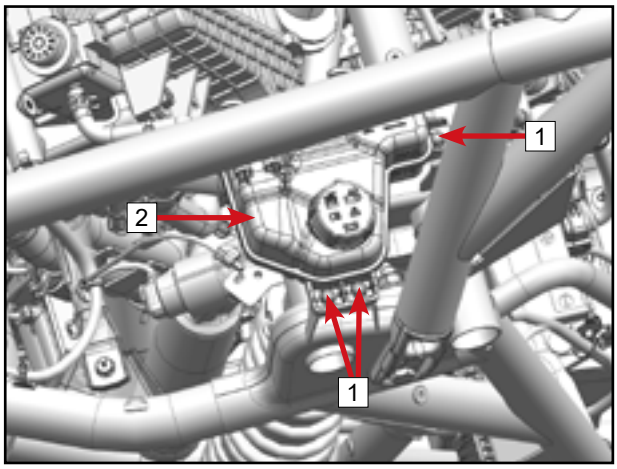

Insert the relevant tie band [2] into the intercooler connection bracket [3] hole and the reinforcing pipe [4] hole.
Plug in the radiator connector [1].

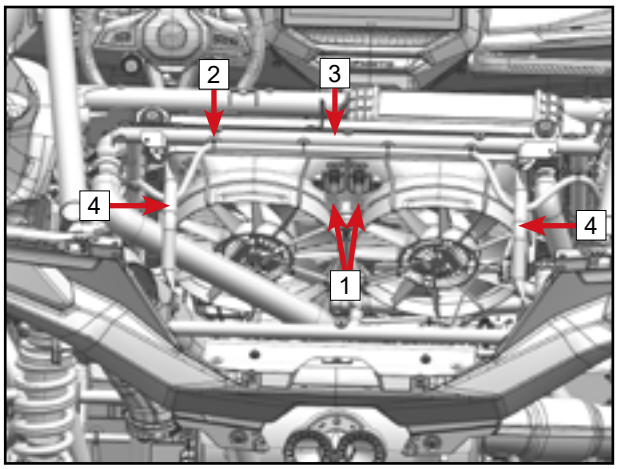

© CFMOTO Powersports, Inc. This manual is subject to all applicable copyright laws. Reproduction or duplication in any form, whole or in part, is strictly prohibited.

Install the engine degassing tube [2] to the fitting.
Tighten the clamp [1].

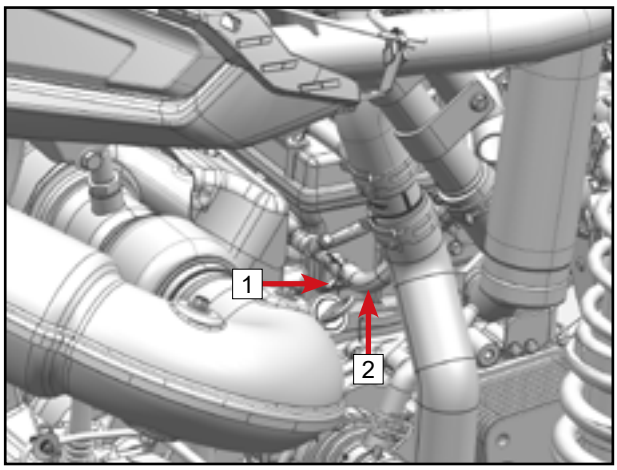

Install the outlet pipe [2] of the turbocharger to the pipe joint, and align the mark [A] with the protrusion [B].
Tighten the clamp [1].

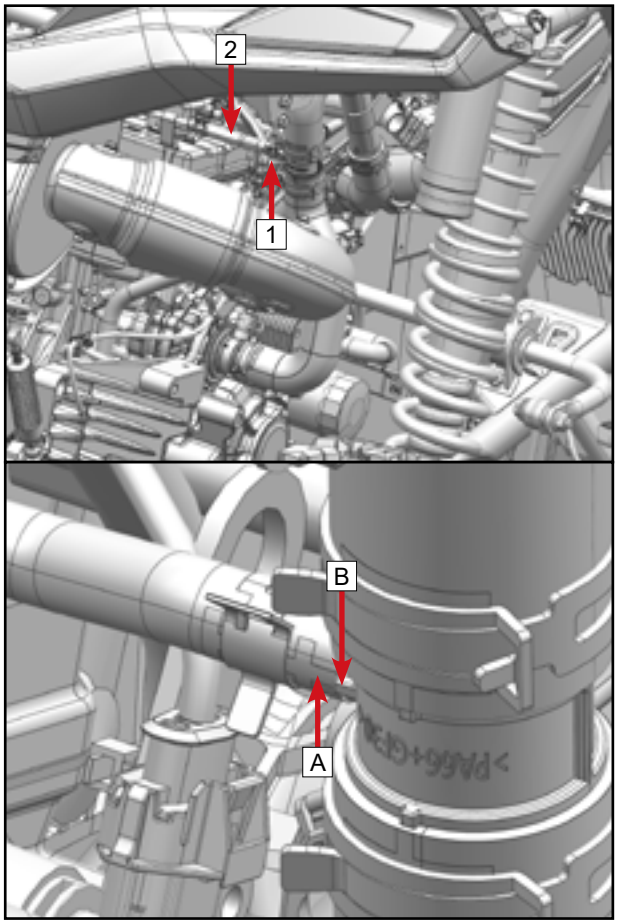

Install the engine outlet pipe [2] to the thermostat outlet pipe, and align the mark [A] with the mark [B].
Tighten the clamp [1].

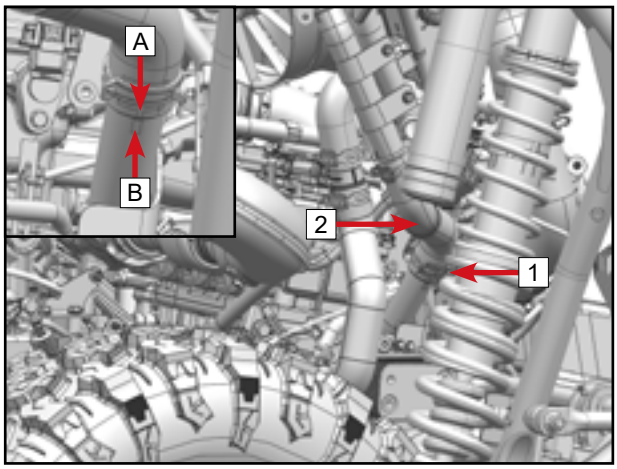

© CFMOTO Powersports, Inc. This manual is subject to all applicable copyright laws. Reproduction or duplication in any form, whole or in part, is strictly prohibited.

Install intercooler inlet hose 1 [2] to turbocharger, align the mark [A] with the mark [B].
Tighten the clamp [1].

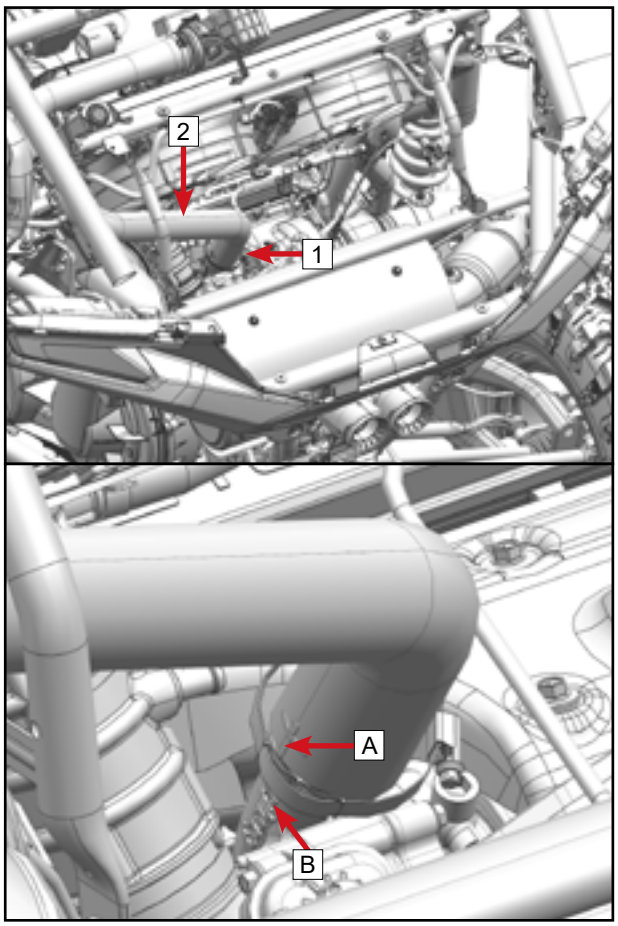

Install the pipe [2] on the pipe [3], and align the mark [A] with the protrusion [B].
Tighten the clamp [1].

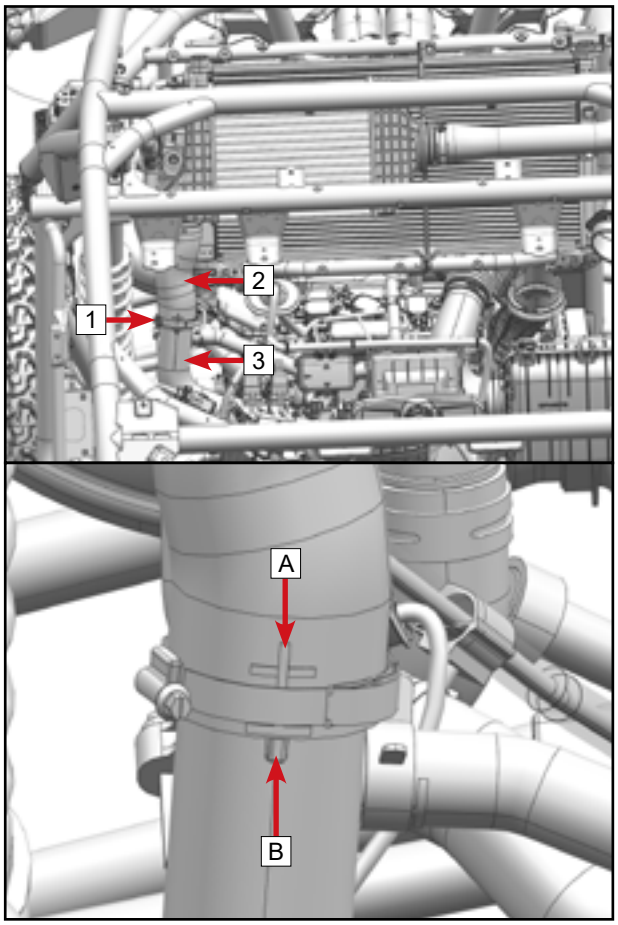

© CFMOTO Powersports, Inc. This manual is subject to all applicable copyright laws. Reproduction or duplication in any form, whole or in part, is strictly prohibited.

Install engine inlet pipe [2] to water pump cover.
Align mark [A] and bump [B].
Tighten the clamp [1].

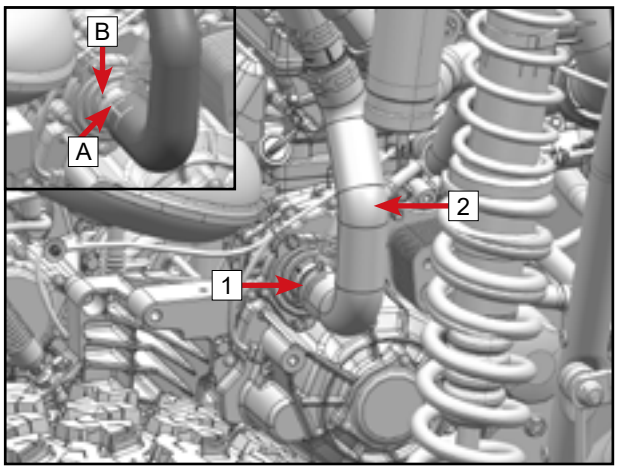

Refer to Chapter 06 "Vehicle and Body Panels" to install:
— LH/RH air inlet port deflector
— Radiator LH/RH baffle
— Engine heat shield
— Seat rear baffle
— Air filter service cover
— Baffle front service cover
— LH/RH front filter panel
— LH/RH side inner panel
— Rear LH/RH side panel assembly
— Rear lower panel
— Cargo box front baffle
— Grill assembly
— LH/RH upper filter panel assembly
— Cargo box LH/RH side cover inner plate
— Plastic rear cargo box assembly
— Cab LH/RH joint
— LH/RH base panel (single-row Z10) or LH/RH lower panel (double-row Z10-4)
— LH/RH side panel (single-row Z10)
— LH/RH threshold deco plates
— Seats (single-row Z10) or seats in the rear row (double-row Z10-4)

NOTE: Before the vehicle body panels are fully installed, add coolant and vent the cooling system.

© CFMOTO Powersports, Inc. This manual is subject to all applicable copyright laws. Reproduction or duplication in any form, whole or in part, is strictly prohbited.

4.1 CVT Description 04-3
4.1.1 System Overview 04-3
4.2 CVT Special Tools - Essential 04-4
4.2.1 CVT Required Special Tools - TMT 04-5
4.2.2 Drive Pulley Exploded View - TMT 04-6
4.2.3 Driven Pulley Exploded View - TMT 04-7
4.2.4 CVT Air Duct Exploded View 04-8
4.3 CVT Diagnostics and Maintenance 04-9
4.3.1 How to Avoid CVT Failure / Overheating and Diagnosis 04-9
4.3.2 CVT Draining and Drying Procedure (Water Ingress) 04-10
4.3.3 CVT Drive Belt – Removal/Inspection/Replacement (TMT CVT) 04-11
4.4 CVT OVERHAUL - TMT 04-12
4.4.1 CVT Removal for Overhaul (TMT) 04-12
4.4.2 Drive Pulley Overhaul (TMT) 04-15
4.4.2.1 Disassembly 04-15
4.4.2.2 Inspection 04-16
4.4.2.3 Reassembly 04-18
4.4.3 Driven Pulley Overhaul (TMT) 04-20
4.4.3.1 Disassembly 04-20
4.4.3.2 Inspection 04-21
4.4.3.3 Reassembly 04-23
4.4.4 CVT Installation (TMT) 04-25
4.4.4.1 Drive Pulley, Driven Pulley and CVT Belt Installation 04-25
4.4.4.2 CVT Case Cover Installation 04-27
4.4.5 Driven Pulley Adjustment Procedure (TMT) 04-28
4.5 Transmission 04-29
4.5.1 Transmission Special Tools - Essential 04-30
4.5.1.1 Transmission Special Tools - TMT 04-31
4.5.2 Transmission Exploded Views 04-32
4.5.3 Transmission Overhaul 04-37
4.5.3.1 Disassembly 04-37

© CFMOTO Powersports, Inc. This manual is subject to all applicable copyright laws. Reproduction or duplication in any form, whole or in part, is strictly prohbited.

4.5.3.2 Parts Inspection 04-50
4.5.3.3 Reassembly 04-64
4.5.4 Rear Gear Case Gear Axial Clearance Inspection and Adjustment..... 04-79
4.5.5 Transmission Bevel Gear Clearance Adjustment 04-81
4.6 Gear Shifter 04-86
4.6.1 Shifter Inspection and Adjustment 04-86
4.6.2 Shifter Assembly Removal 04-87
4.6.3 Shifter Mechanism Disassembly / Reassembly 04-88
4.6.4 Shift Mechanism Reassembly 04-90

© CFMOTO Powersports, Inc. This manual is subject to all applicable copyright laws. Reproduction or duplication in any form, whole or in part, is strictly prohbited.

4.1 CVT Description

4.1.1 System Overview

The engine and transmission are connected by a continuously variable transmission (CVT) system that utilizes a drive belt and clutch pulleys to automatically vary transmission drive ratios, allowing infinite variability between the highest and lowest vehicle speeds with no discrete steps or shifts.

The drive pulley 1 is mounted on the engine crankshaft. The driven pulley is mounted on the input shaft of the transmission. The drive belt 3 is a heavy duty V-belt that connects the drive and driven pulleys.

A CVT housing and cover encloses the clutches and belt assembly, and cooling is achieved by circulating air through the inlet and outlet cooling pipes, which should be checked frequently.

TMT CVT
North America

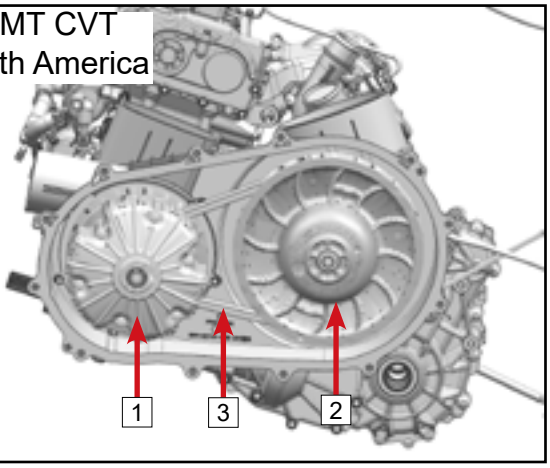

NOTE
For better understanding, the following illustrations display the engine out of the vehicle.To perform repairs or maintenance, it is not necessary to remove the engine.

⚠WARNING
Never touch the CVT while the engine is running. Never operate the vehicle with the CVT cover removed.

⚠WARNING
CVT repairs must be performed by an authorized CFMOTO dealer. Subcomponent installation and assembly tolerances require strict adherence to the procedures detailed.

⚠WARNING
A clutch assembly is a precisely balanced unit. Never replace parts with used parts from another clutch assembly.

© CFMOTO Powersports, Inc. This manual is subject to all applicable copyright laws. Reproduction or duplication in any form, whole or in part, is strictly prohibited.

4.2 CVT Special Tools - Essential

Drive Pulley Removal Tool

0NYM-052100-922-003

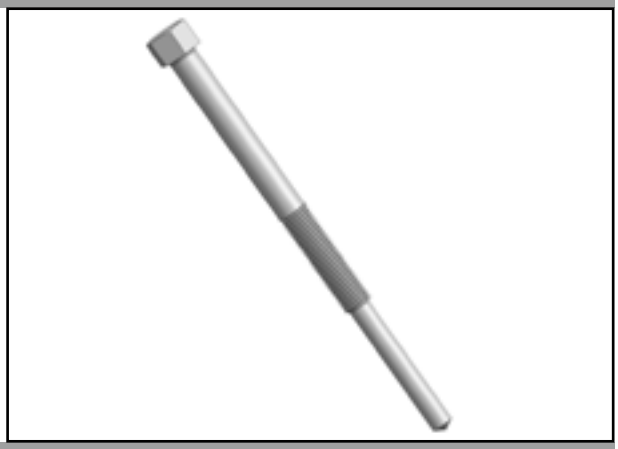

Driven Pulley Sheave Separating Tool

0JWF-052000-922-003



Driven Pulley Removal Tool

0800-052000-922-002

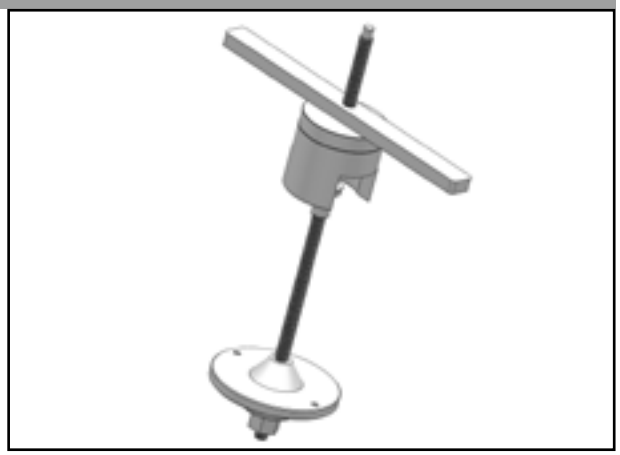

© CFMOTO Powersports, Inc. This manual is subject to all applicable copyright laws. Reproduction or duplication in any form, whole or in part, is strictly prohibited.

4.2.1 CVT Required Special Tools - TMT

These special tools are required in combination with the tools in section 4.2 to service the TMT CVT System.

CVT Stop Tool

0NYT-050000-922-001-Z
(For TMT CVT)

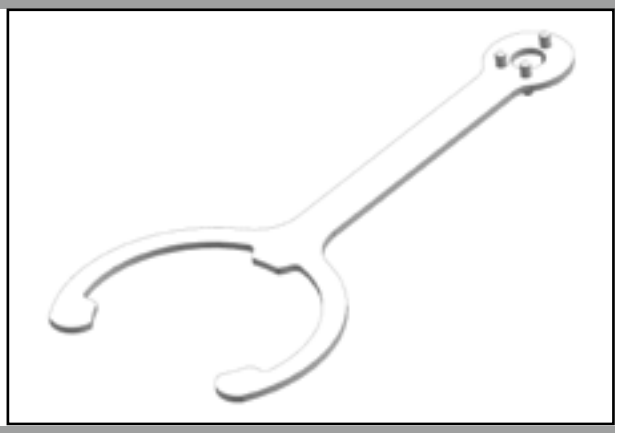

Driven Pulley Guide Sleeve

0NYT-052200-922-001-Z
(For TMT CVT)

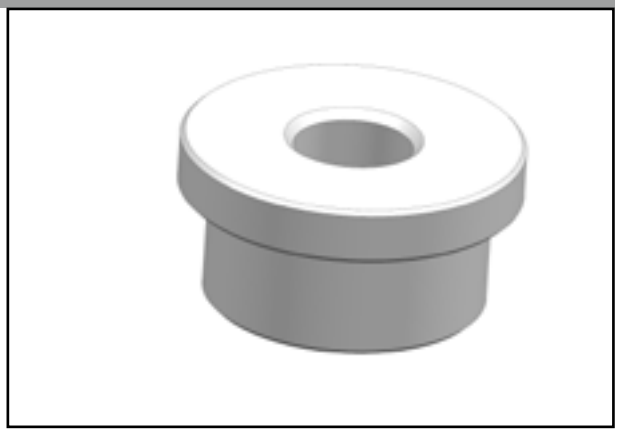

© CFMOTO Powersports, Inc. This manual is subject to all applicable copyright laws. Reproduction or duplication in any form, whole or in part, is strictly prohbited.

4.2.2 Drive Pulley Exploded View - TMT

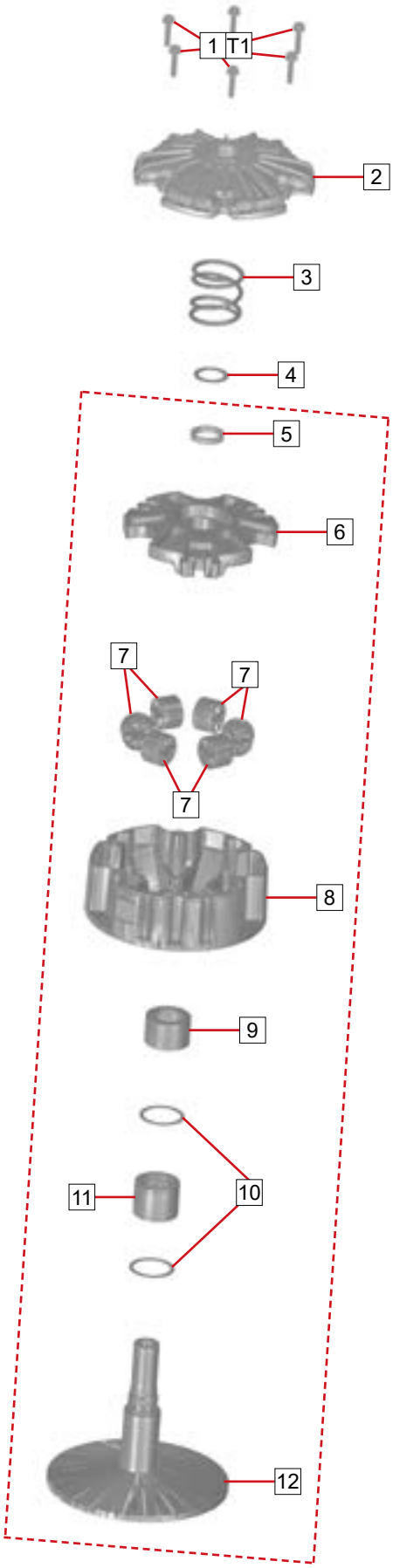

NO.	Description
1	Hex flange bolt M6×1×30
2	Drive pulley guide disk assembly
3	Drive pulley spring
4	Speed limit washer
5	Lock nut
6	Drive pulley thrust disc assembly
7	Flail block assembly
8	Drive pulley sliding sheave assembly
9	Adaptor sleeve
10	Bearing washer 42.25×50.07×1.27
11	Needle bearing 41.225×50.681×39.37
12	Drive pulley fixed sheave assembly

T1 = 13.5 N•m
(120 in-lb.)

NOTE: Items 5 ~ 12 are not serviceable

© CFMOTO Powersports, Inc. This manual is subject to all applicable copyright laws. Reproduction or duplication in any form, whole or in part, is strictly prohibited.

4.2.3 Driven Pulley Exploded View - TMT

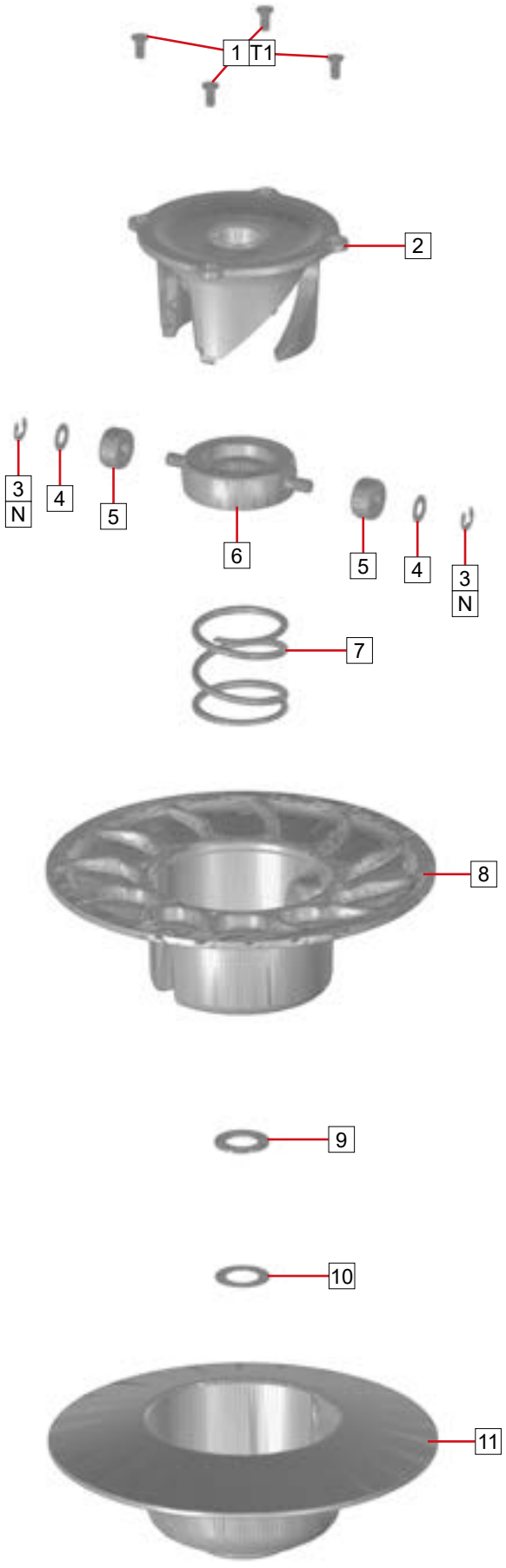

NO.	Description
1	Hex socket countersunk head screw
2	Cam assembly
3	Circlip
4	Roller washer
5	Roller
6	Driven spring seat
7	Driven pulley spring
8	Driven pulley sliding sheave assembly
9	Adjustment shim (thick)
10	Adjustment shim (thin)
11	Driven pulley fixed sheave

T1 = 11 ~ 14 N•m
(100 ~ 120 in-lb.)

N: Parts that must be replaced with new after removal.

NOTE

The number of adjustment shims are selected based on actual requirements (the driven pulley does not rotate when the engine is at idle speed), but the total thickness of the adjustment shims should be at least approximately 1.5 mm. Always follow the principle of gradually increasing the thickness of the adjustment shims. Adhere to the principle of installing a thicker adjustment shim first, followed by a thinner one.

© CFMOTO Powersports, Inc. This manual is subject to all applicable copyright laws. Reproduction or duplication in any form, whole or in part, is strictly prohbited.

4.2.4 CVT Air Duct Exploded View

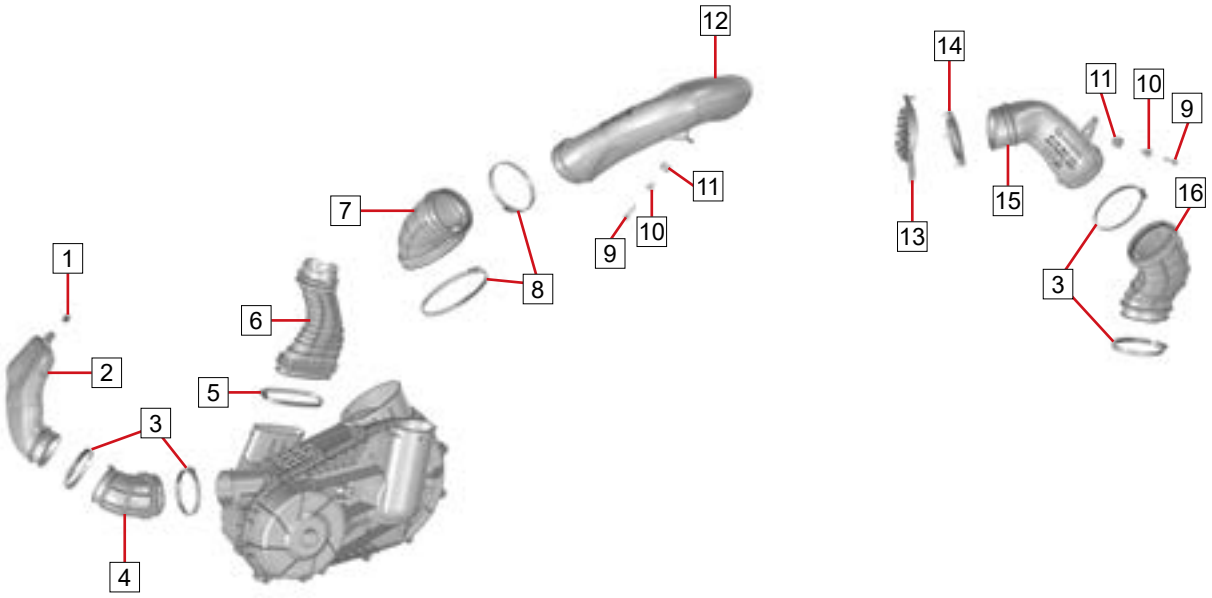

NO.	Description
1	M6 nut clip
2	CVT front air outlet pipe
3	A-type screw clamp
4	CVT front air outlet pipe connector
5	Clamp
6	CVT front air inlet pipe
7	Rear air outlet pipe connector
8	Type A worm drive hose clamp
9	M6×30 inner hex bolt
10	Fuel tank cushion rubber liner
11	Fuel tank rear cushion sleeve
12	CVT air outlet pipe
13	Air inlet port guard 2
14	Air inlet pipe cushion sleeve
15	CVT inlet pipe
16	Rear air inlet pipe connector

© CFMOTO Powersports, Inc. This manual is subject to all applicable copyright laws. Reproduction or duplication in any form, whole or in part, is strictly prohbited.

4.3 CVT Diagnostics and Maintenance

4.3.1 How to Avoid CVT Failure / Overheating and Diagnosis

During routine maintenance, or whenever CVT system overheating is evident, it's important to check the inlet and outlet duct for obstructions. Obstructions to air flow through the ducts will significantly increase CVT system operating temperatures. The vehicle should be operated in Low when extended low vehicle speed operation is anticipated.

CLUTCH DRIVE BELT & CVT CASE COVER RELATED ISSUES: DIAGNOSIS	
POSSIBLE CAUSES:	**SOLUTIONS / WHAT TO DO:**
Loading the vehicle into a tall trailer when in high range.	Shift transmission to Low during loading of the vehicle to prevent belt burning.
Starting out going up a steep incline from a stopped position.	When starting out on an incline, use Low gear. Shift transmission to Low during loading of the vehicle to prevent belt burning.
Driving at low RPM or low ground speed (approximately 3~7 mph [5 ~ 10 km/h]) in high gear.	Drive at higher speed or use Low. The use of Low is highly recommended for cooler CVT operating temperatures and longer component life.
Insufficient engine warm-up when exposed to low ambient temperatures.	Warm engine at least 5 min., then with transmission in neutral, advance throttle to approx. 1/8 throttle in short bursts, 5 to 7 times. The belt will become more flexible and prevent belt burning.
Slow and easy clutch engagement.	Fast, effective use of the throttle for efficient engagement.
Stuck in mud or snow.	Shift the transmission to Low, carefully use fast, aggressive throttle application to engage clutch. **⚠WARNING: Excessive throttle may cause loss of control and vehicle overturn.**
Climbing over large objects from a stopped position.	Shift the transmission to Low, carefully use fast, aggressive, brief throttle application to engage clutch. **⚠WARNING: Excessive throttle may cause loss of control and vehicle overturn.**
Belt slippage from water or snow ingestion into the CVT system.	Remove the CVT case cover drain bolt and drain the water from the CVT chamber. Shift the transmission to neutral, start the engine, and depress the accelerator pedal to continuously vary the engine speed between idle and high RPM (do not exceed 5s at full open throttle). Then, use the low gear to test whether the CVT function is normal. If necessary, repeat the step of drying the moisture several times and retest. If the CVT system is still slipping or underperforming, contact your dealer for inspection and repair. If leakage occurs repeatedly, check the CVT cover seal ring for damage.
Clutch malfunction.	Clutch component inspection should be performed by a CFMOTO certified technician.
Poor engine performance.	Fouled spark plugs, foreign material in fuel tank, restricted fuel lines, or faulty fuel pump may cause symptoms similar to clutching malfunction.

© CFMOTO Powersports, Inc. This manual is subject to all applicable copyright laws. Reproduction or duplication in any form, whole or in part, is strictly prohbited.

Operating in Low Gear

Low gear should be used when riding through rough terrain or when continuous ground speeds are less than 19 mph (30 km/h). Use High gear when continuous ground speeds will be more than 19 mph (30 km/h).

NOTE
Using High gear for heavy loads, hilly terrain, sand/dune environments, or in wet, muddy conditions will increase the chance of drive belt burning.

General Sand / Dune Driving

The use of Low gear when continuously operating at speeds less than 30 mph will greatly increase belt life in sand/dune environments.

NOTE
Do not shift from Low to High without coming to a complete stop.

4.3.2 CVT Draining and Drying Procedure (Water Ingress)

CVT Draining

If there is water in the CVT chamber, follow these steps to drain it:

— Stop the engine on a flat surface.

— Remove CVT cover drain bolt 1 and O-ring 2.

— Drain water from the CVT chamber and dry the wet CVT.

— Reinstall CVT cover drain bolt 1 and O-ring 2.

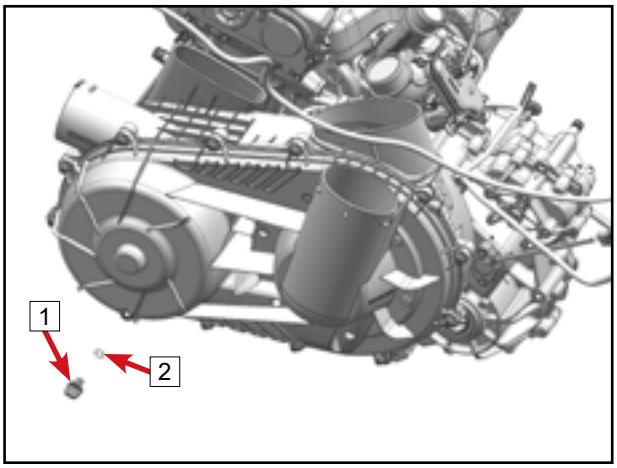

NOTE
If muddy or dirty water enters the CVT chamber, it is necessary to check and clean the CVT, CVT chamber and the air inlet and outlet ducts thoroughly. Make sure there is no jamming of the CVT at the same time before driving.

Drying the CVT

After draining the water from the CVT chamber, shift the transmission to neutral, start the engine, apply the accelerator, and continuously change the engine speed between idle and 5000 Rpm (do not fully open the accelerator for more than 5s). Then, use the low gear to test whether the CVT function is normal. If necessary, repeat the step of drying the moisture several times and retest. If the CVT system is still slipping or underperforming, disassbembly for inspection and repair may be required.

If water ingress occurs repeatedly, check the CVT cover seal ring for damage.

© CFMOTO Powersports, Inc. This manual is subject to all applicable copyright laws. Reproduction or duplication in any form, whole or in part, is strictly prohbited.

4.3.3 CVT Drive Belt – Removal/ Inspection/Replacement (TMT CVT)

Removal

NOTE
If the drive belt malfunctions, it is necessary to inspect the CVT, CVT case, CVT case cover and air inlet/outlet ducts, and clean them thoroughly to remove any foreign objects, belt core wires or debris.

Remove CVT case cover. (See section 4.5 for details.)

Screw the driven pulley sheave separating tool [1] into the threaded hole of the three-lug pad disc [2].

Driven pulley fixed and sliding sheave separating tool (See section 4.2 for details.)

Screw in the separating tool [1] until the driven pulley sheaves are fully separated.

Remove the belt by sliding it over the top edge of driven pulley sheave as shown (arrow).

NOTE
If there is no arrow indicating the direction of rotation on the drive belt, mark it before removal to avoid wrong direction of installation.

Inspection and measurement

Inspect drive belt for oil stain or damage.

Inspect belt contact surface for cracks or damage.

Use vernier caliper to check belt width at belt core line [1].

Drive Belt Width Limit: 33.8 mm

Replace a damaged belt or belt exceeding the wear limit with a new one.

NOTE
Clean the belt thoroughly if oil stain or grease adheres to belt surface.

Replacement

Reverse the removal procedures for installation.

After installing the belt, be sure to remove the separating tool [1].

Turn the driven pulley 5~7 turns by hand to pre-tighten the drive belt.

Install CVT case cover. (See section 4.4.4.2 for details)

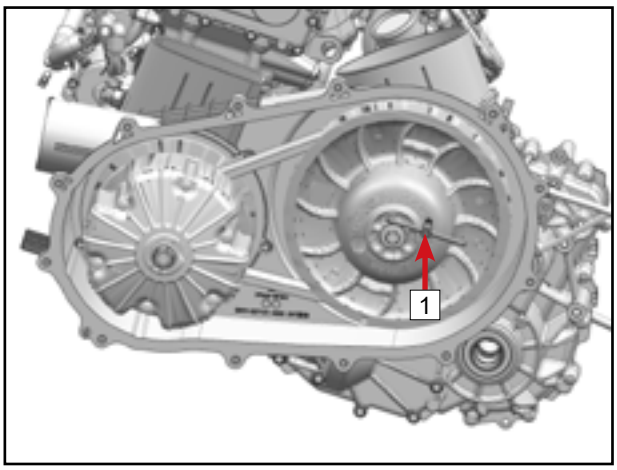

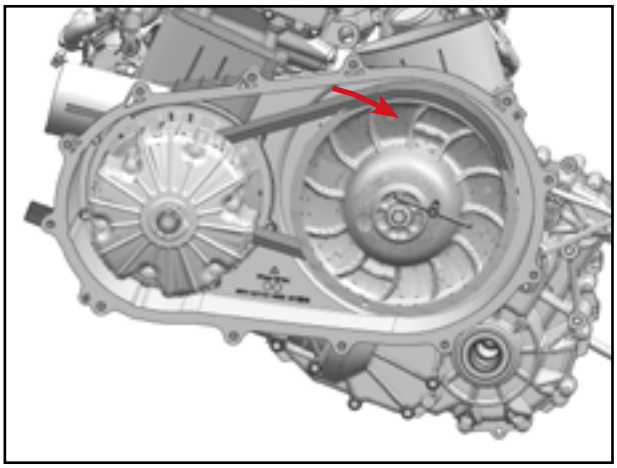

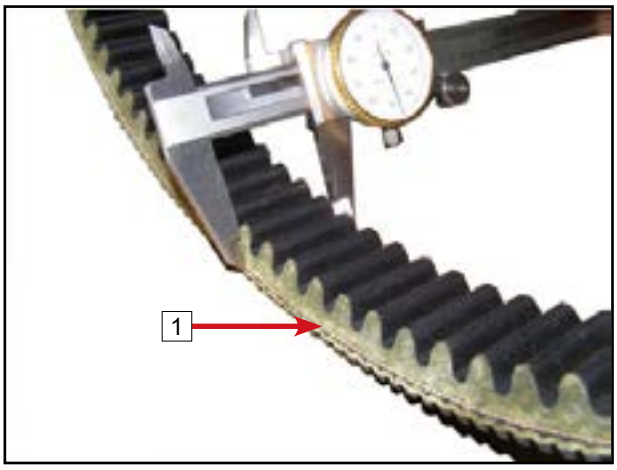

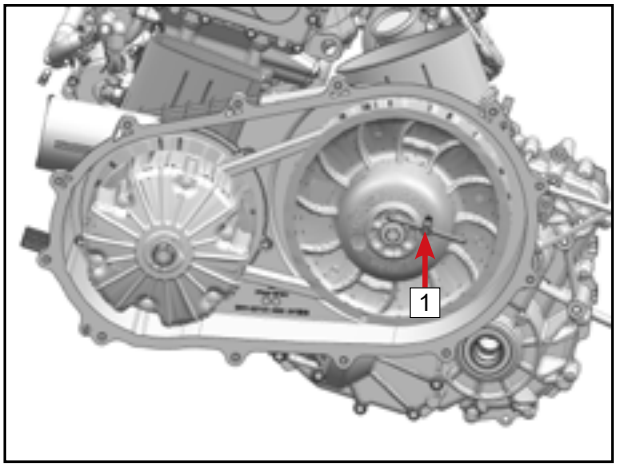

© CFMOTO Powersports, Inc. This manual is subject to all applicable copyright laws. Reproduction or duplication in any form, whole or in part, is strictly prohibited.

4.4 CVT OVERHAUL - TMT

4.4.1 CVT Removal for Overhaul (TMT)

Separate the CVT inlet pipe from the CVT case cover.

Remove CVT case cover bolts assembly [1].

Remove CVT case cover [2].

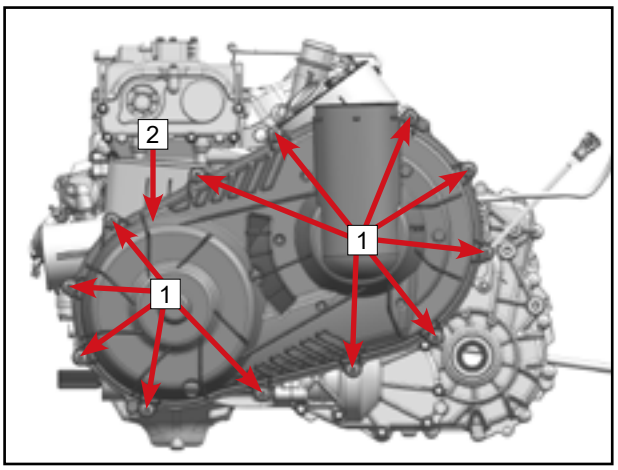

Separate the CVT case cover seal ring [2] from the CVT case cover [1] and check:

Inspect CVT case cover [1] for cracks or damage. Replace if any defect is found.

Inspect CVT case cover seal ring [2] for aging, damage or other defects. Replace if any defect is found.

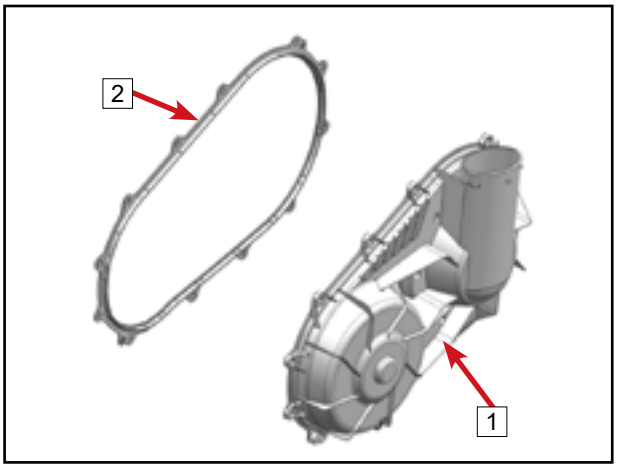

Use driven pulley fixed and sliding sheave separating tool [1] to push out driven pulley fixed sheave and sliding sheave, and remove and check drive belt [2]. (See section 4.3.3 for details.)

Driven pulley fixed and sliding sheave separating tool
(See section 4.2 for details.)

Remove the separating tool [1].

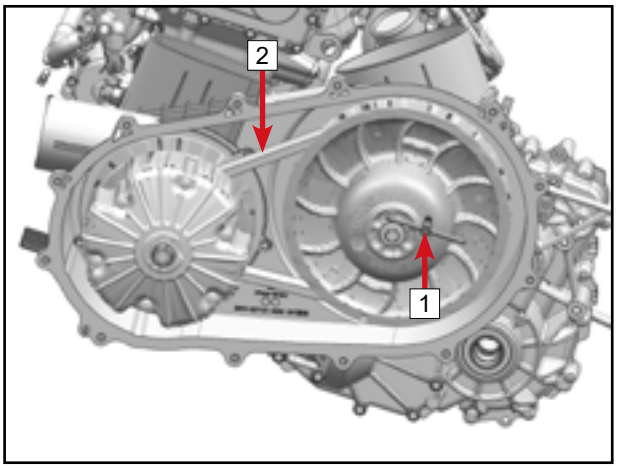

Remove drive pulley bolt [1] and gasket [2].

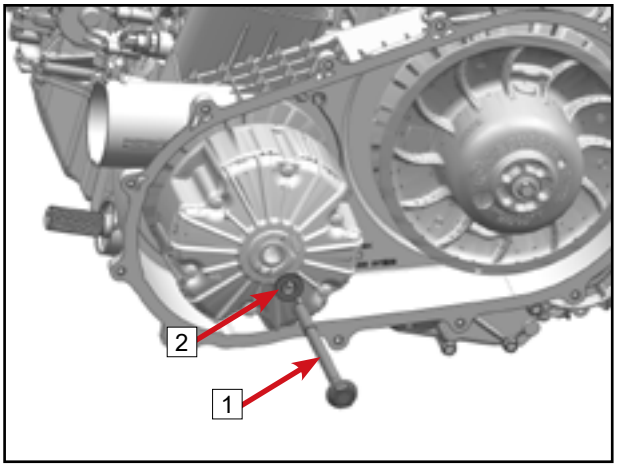

© CFMOTO Powersports, Inc. This manual is subject to all applicable copyright laws. Reproduction or duplication in any form, whole or in part, is strictly prohibited.

Turn the drive pulley removal tool [A] clockwise into the shaft hole to push out the drive pulley [1].

Drive Pulley Removal Tool (See section 4.2 for details.)

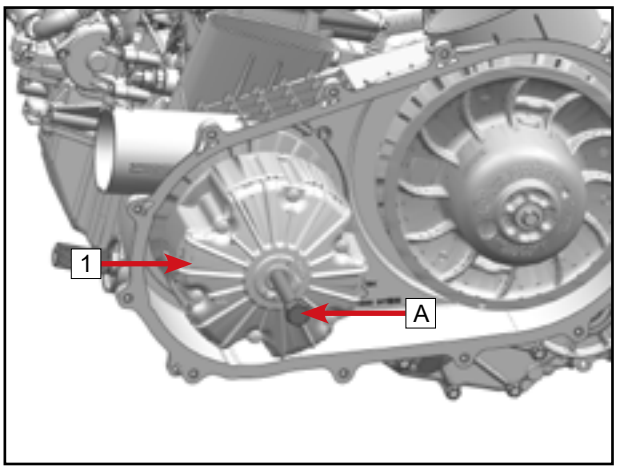

Before removing the driven pulley, make sure to make reference marks on the fixed sheave and the sliding sheave.

NOTE
If the driven pulley assembly is not installed as accurately as when removed, it will cause the driven pulley assembly to lose balance.

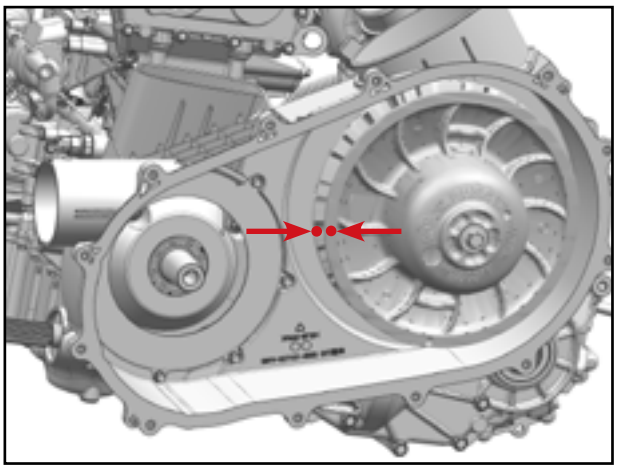

Remove driven pulley bolt [1] and washer [2].

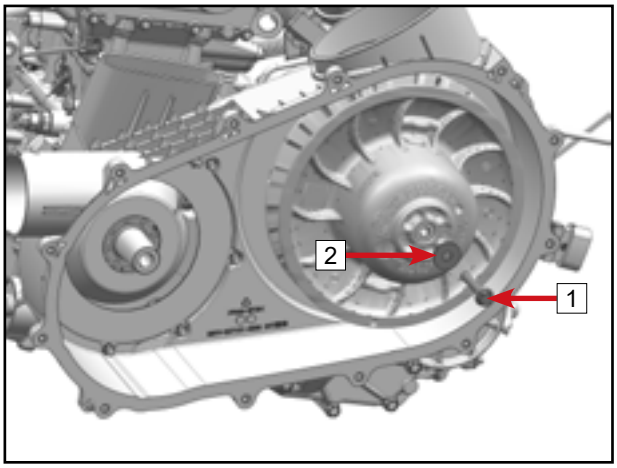

Remove the fixed sheave [1].

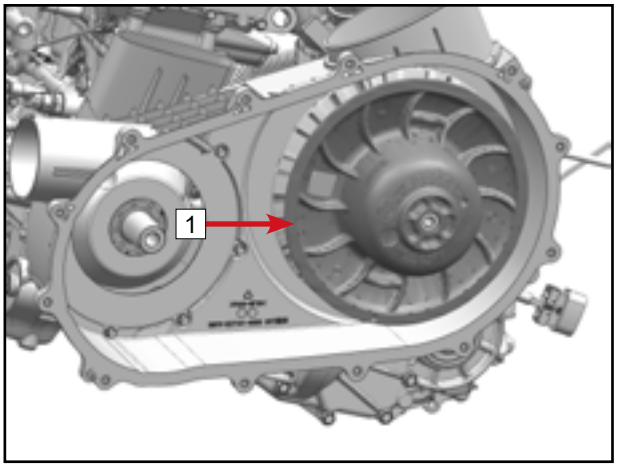

© CFMOTO Powersports, Inc. This manual is subject to all applicable copyright laws. Reproduction or duplication in any form, whole or in part, is strictly prohibited.

Remove the adjustment shims 1.

NOTE
The number of adjustment shims may be one or more. When installing, install the thick shim first, and thin shim(s) secondary.

Remove the sliding sheave 2.

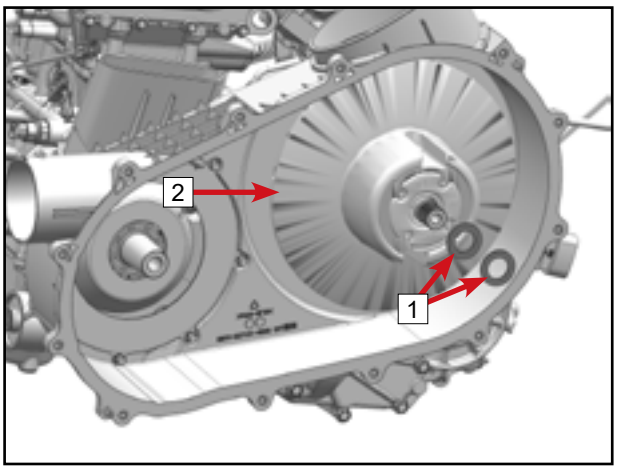

© CFMOTO Powersports, Inc. This manual is subject to all applicable copyright laws. Reproduction or duplication in any form, whole or in part, is strictly prohibited.

4.4.2 Drive Pulley Overhaul (TMT)

4.4.2.1 Disassembly

Before disassembling the drive pulley assembly, make sure to make reference marks on the sliding sheave and guide disc.

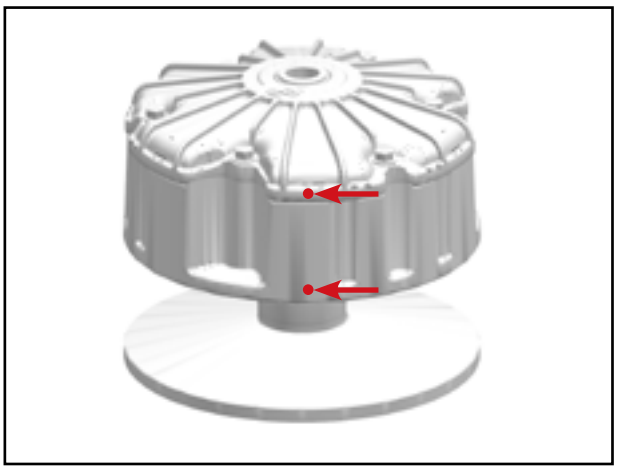

NOTICE
Due to its unique design and manufacturing that requires specialized assembly of the thrust disc, the TMT drive pulley cannot be fully disassembled. **Do not attempt to remove sliding sheave or thrust disc components from the stationary sheave shaft. Damage will result.** **If any sliding sheave components are damaged or worn, or if drive clutch performance remains poor after repeated cleanings, it must be replaced as an assembly.**

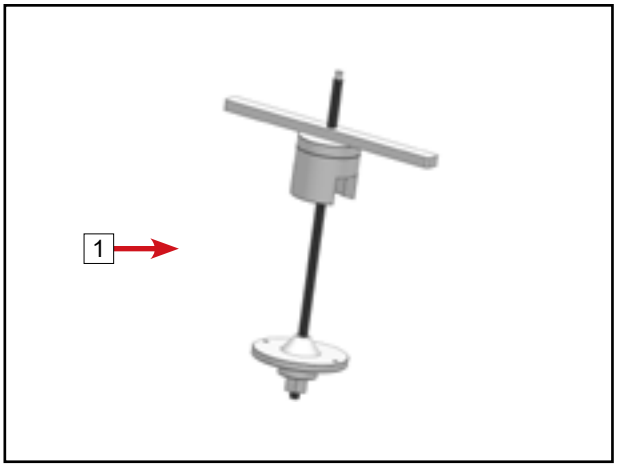

⚠WARNING
The drive pulley guide disc bears high spring preload. Do not attempt to remove the guide disc without the recommended tool.

Driven Pulley Removal Tool 1 (See section 4.2 for details.)

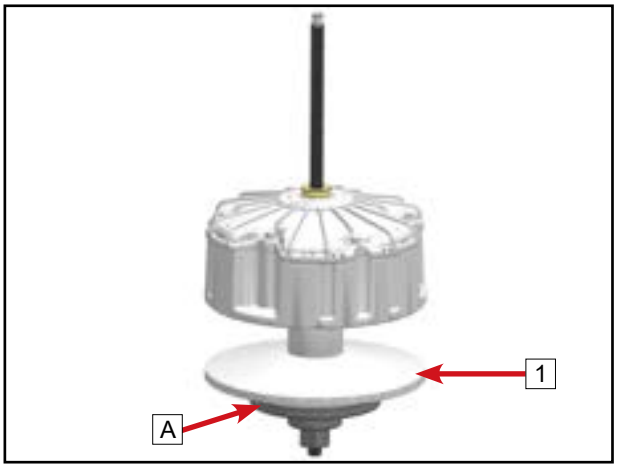

Attach driven pulley removal tool A to a bench vise.

Install the drive pulley assembly 1 onto the tool A.

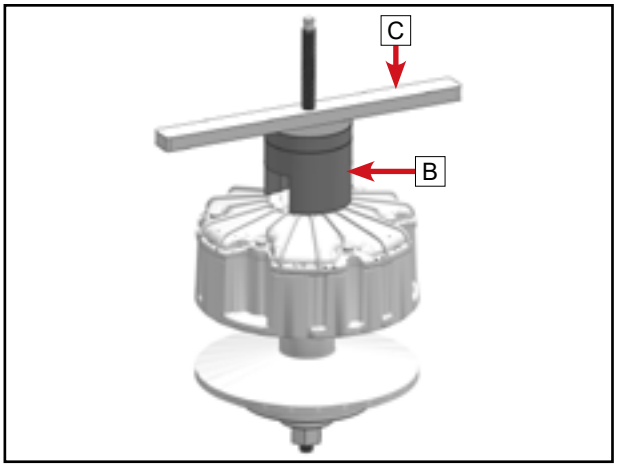

Install the press sleeve B and handle C of the driven pulley removal tool.

Tighten the handle C.

© CFMOTO Powersports, Inc. This manual is subject to all applicable copyright laws. Reproduction or duplication in any form, whole or in part, is strictly prohibited.

Remove the bolts [1] diagonally.
Remove driven pulley removal tool.
Remove the drive pulley guide disc assembly [2].

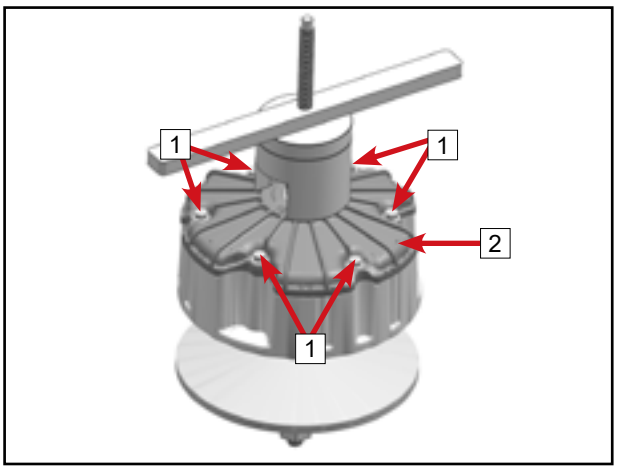

Remove drive pulley spring [1].
Remove speed limit washer [2].

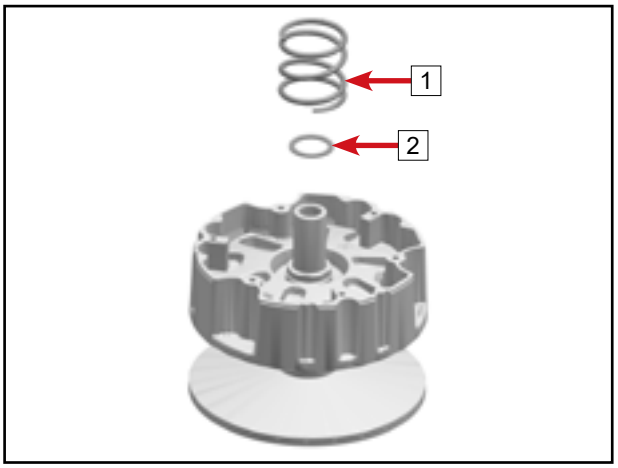

NOTICE

Due to its unique design and manufacturing that requires specialized assembly of the thrust disc, the TMT drive pulley cannot be fully disassembled from this point.
Do not attempt to remove sliding sheave or thrust disc components from the stationary sheave shaft. Damage will result.
If any sliding sheave components are damaged or worn, or if drive clutch performance remains poor after repeated cleanings, it must be replaced as an assembly.

4.4.2.2 Inspection

Inspect the thrust disc sliding shoes [A] for signs of excess wear or damage.
Inspect the sliding sheave contact surfaces for signs of excess wear or damage.
If any damage is found, replace the drive pulley.

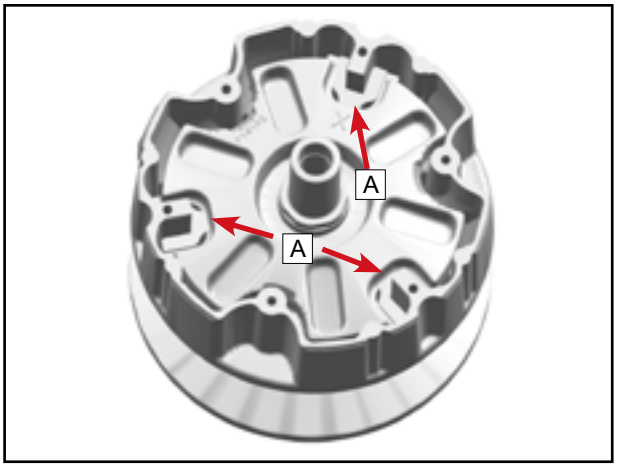

© CFMOTO Powersports, Inc. This manual is subject to all applicable copyright laws. Reproduction or duplication in any form, whole or in part, is strictly prohibited.

Sliding Sheave Movement

Keeping the drive pulley upright as shown, inspect the movement of the sliding sheave on the stationary sheave shaft. If there is any binding, clean the sliding surfaces with a solvent-based cleaner, blow dry with compressed air, and check for free movement.

If binding remains, or the sliding sheave assembly has excessive play on the stationary shaft, replace the drive pulley.

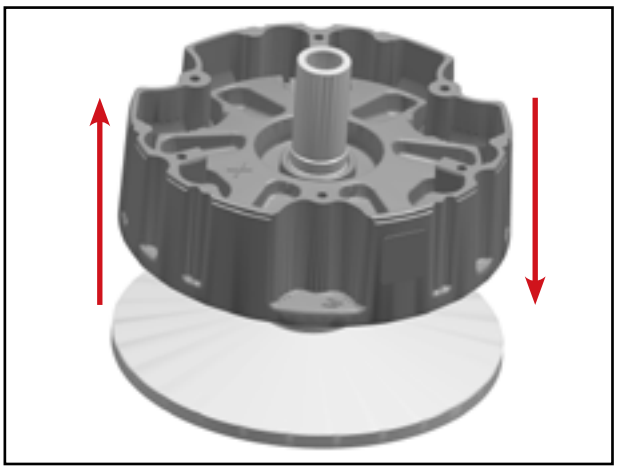

Sliding and Stationary Sheave Inspection

Inspect the sliding and stationary sheave surfaces [1] for the following conditions:

— Cracks or other obvious damage.

— Step wear, scratches, or damage on the sheave surfaces.

— Severe wear or damage to the sheaves.

If any abnormalities are found, replace the drive pulley assembly.

NOTE
Light grooves on the sheave surfaces are considered normal wear.

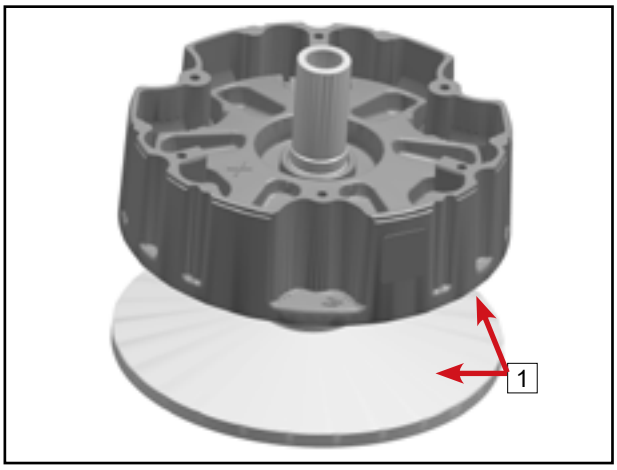

Drive Pulley Spring

Inspect the drive pulley spring [1] for severe deformation or breaks. Replace if any damage is found.

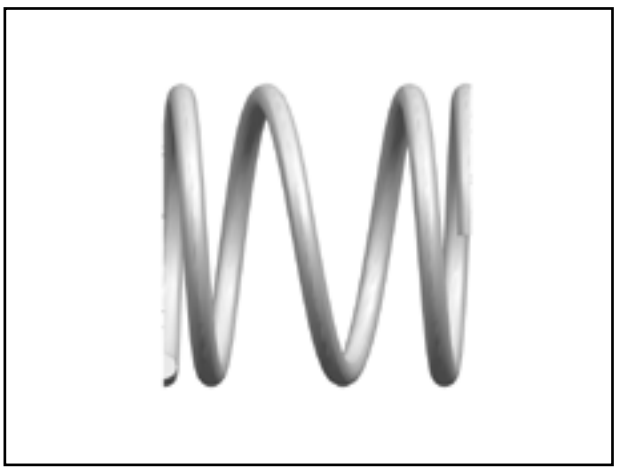

© CFMOTO Powersports, Inc. This manual is subject to all applicable copyright laws. Reproduction or duplication in any form, whole or in part, is strictly prohbited.

Drive Pulley Guide Disc Assembly

Inspect the drive pulley guide disc assembly 1 for cracks or other obvious damage.

Check whether the bushing 2 is severely worn or damaged.

Replace the drive pulley guide disc if necessary.

If the shaft bushing 2 needs to be cleaned, only solvent-based cleaners can be used. After cleaning, it should be dried with clean, dry and lint-free paper. No liquid or foreign matter should be left behind.

NOTE
Do not clean with acetone.

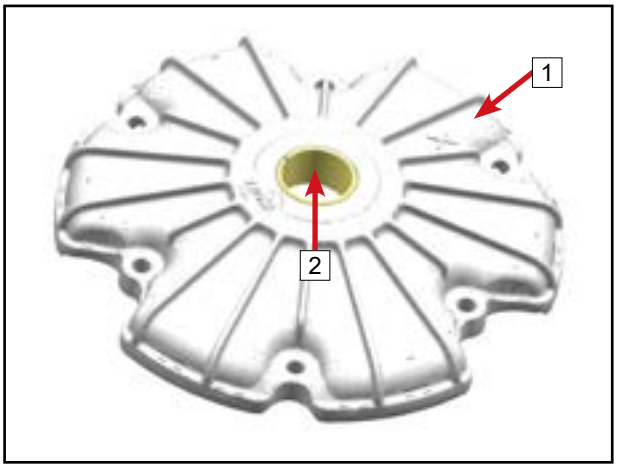

4.4.2.3 Reassembly

Install the speed limit washer 2.

Install drive pulley spring 1.

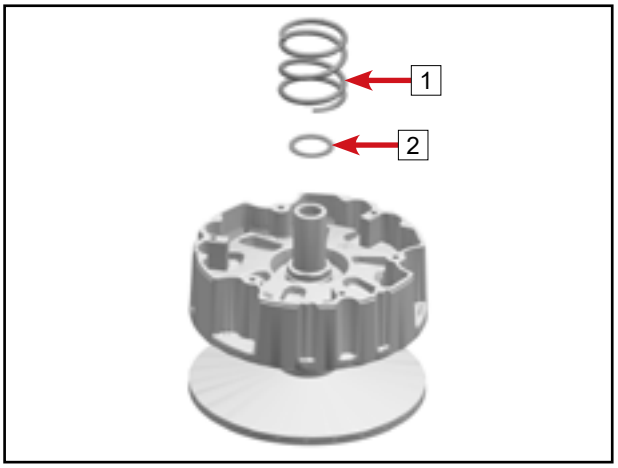

Attach the driven pulley removal tool A to a bench vise.

Driven Pulley Removal Tool
(See section 4.2 for details.)

Install the drive pulley assembly 1 onto the tool A.

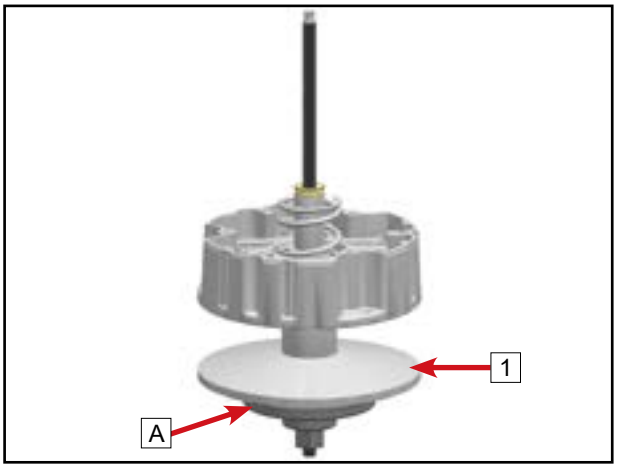

© CFMOTO Powersports, Inc. This manual is subject to all applicable copyright laws. Reproduction or duplication in any form, whole or in part, is strictly prohibited.

Install the drive pulley guide disc assembly 1, press sleeve B and handle C onto the driven pulley removal tool.
Rotate the handle C to compress the drive pulley spring until the drive pulley guide disc 1 reaches the correct position.

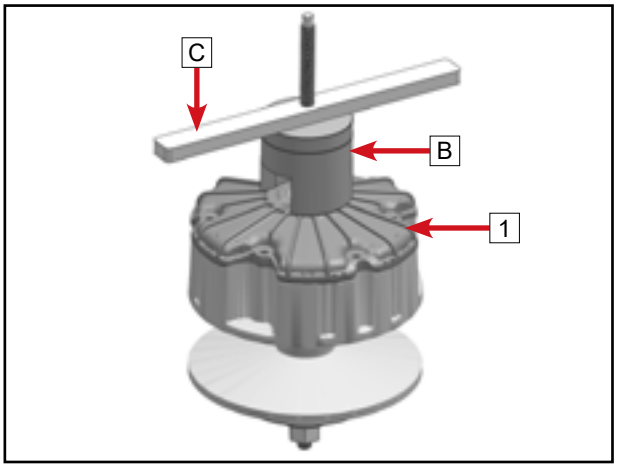

NOTE
Before the guide disc bushing is about to touch the fixed shaft, be sure to align the reference marks made prior to disassembly and then slowly turn the handle C.

Install the bolts 1, and tighten them diagonally and cross-wise to the specified torque.

Drive Pulley Guide Disc Bolts 1	
Torque	13.5 N•m (120 in-lb.)

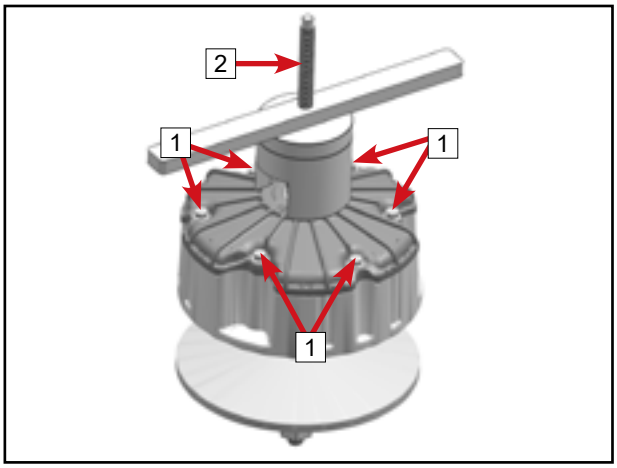

Remove driven pulley removal tool 2.

Once the drive pulley assembly is fully assembled, verify the reference marks you made on the sliding sheave and guide disc are properly aligned.

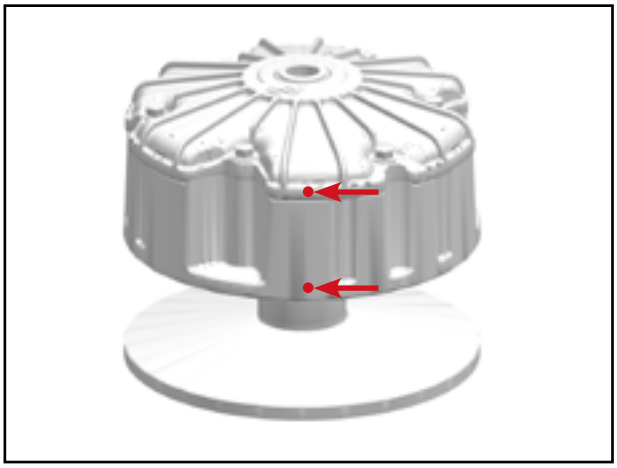

NOTE
If the drive pulley assembly is not assembled as accurately as when disassembled, it will cause the drive pulley assembly to lose balance.

© CFMOTO Powersports, Inc. This manual is subject to all applicable copyright laws. Reproduction or duplication in any form, whole or in part, is strictly prohibited.

4.4.3 Driven Pulley Overhaul (TMT)

4.4.3.1 Disassembly

Before disassembling the sliding sheave component, be sure to make reference mark [A] on the Cam to align the mark [A] with the reference mark [B] made on the sliding sheave before removing the fixed sheave.

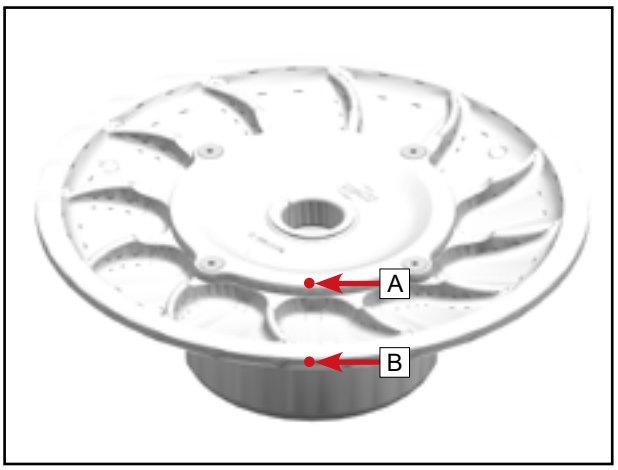

NOTE
If the sliding sheave component cannot be assembled as accurately as they were during disassembly, it will cause the driven pulley assembly to lose balance.

⚠WARNING
The cam bears high spring preload. Do not attempt to remove the cam without the recommended tool.

Driven Pulley Removal Tool [1] (See section 4.2 for details.)
Driven Pulley Guide Sleeve [2] (See section 4.2 for details.)

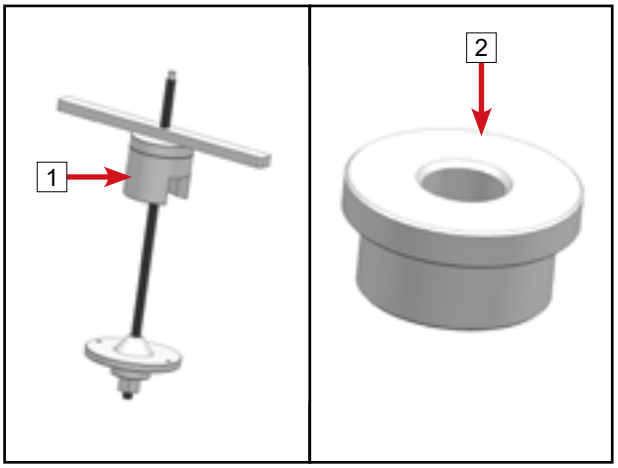

Attach driven pulley removal tool [A] to a bench vise.
Install the sliding sheave assembly [1] onto the tool [A].
Install driven pulley guide sleeve [2].
Install press sleeve [B] and handle [C] on the driven pulley removal tool.
Turn the handle [C], and press the sleeve [B] until seated.

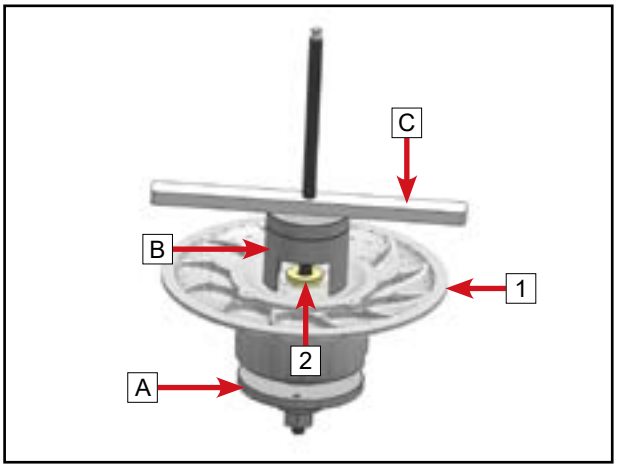

Remove cam assembly screws [1] diagonally.
Slowly release the handle [C] of the tool to release the spring force.

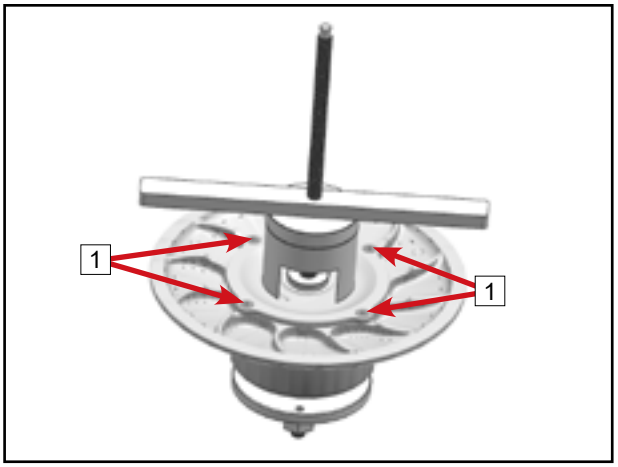

© CFMOTO Powersports, Inc. This manual is subject to all applicable copyright laws. Reproduction or duplication in any form, whole or in part, is strictly prohibited.

Remove cam assembly 1 .
Remove driven pulley spring 2 from the 3 sliding sheave assembly.

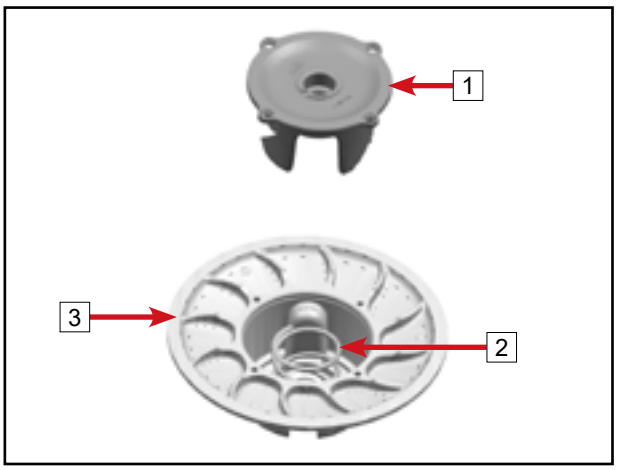

4.4.3.2 Inspection

Driven Pulley Fixed Sheave

Check the fixed sheave for the following conditions:

— Cracks or other obvious damages.
— Step wear, scratches, or damage on the driving surface A.

If any abnormalities are found, replace the fixed sheave.

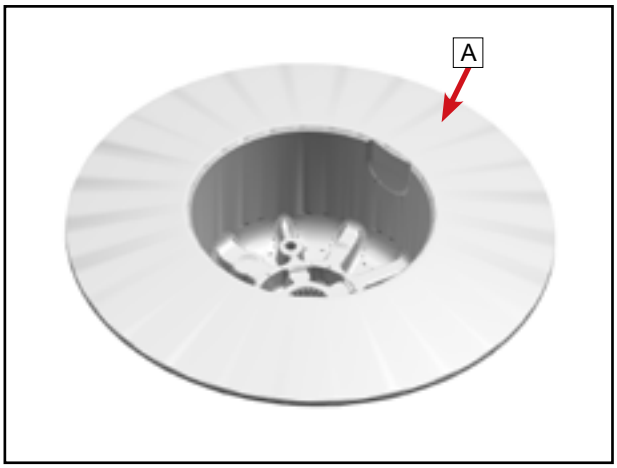

NOTE
Clean before inspection. Light grooves on the sheave surface are considered normal wear. Driven pulley parts are precisely matched. Replace any of them may cause larger engine vibration. Replace in sets.

© CFMOTO Powersports, Inc. This manual is subject to all applicable copyright laws. Reproduction or duplication in any form, whole or in part, is strictly prohbited.

Driven Pulley Sliding Sheave

Check the sliding sheave for the following conditions:

— Cracks or other obvious damage.
— Step wear, scratches, or damage on the driving surface A.
— Severe wear or damage to the bushing B.

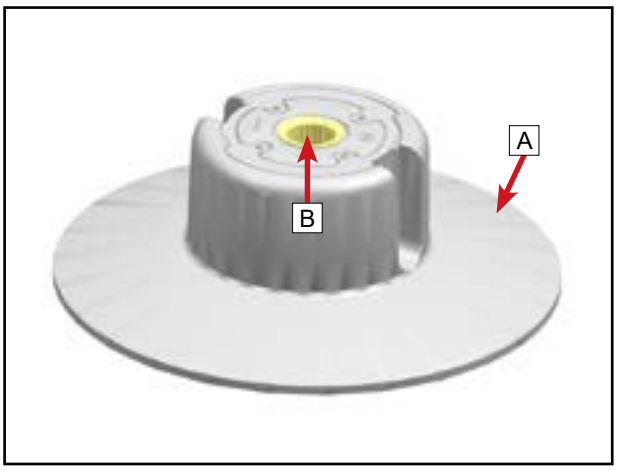

If any abnormalities are found, replace the fixed sheave.

NOTE
Light grooves on the sheave surface are considered normal wear.

Cam Assembly

Check the cam assembly for the following conditions:

— Cracks or other obvious damage.
— Severe wear or damage to the bushing 1.
— Severe wear or damage to the contact surface 2.



If any abnormalities are found, replace the cam assembly.

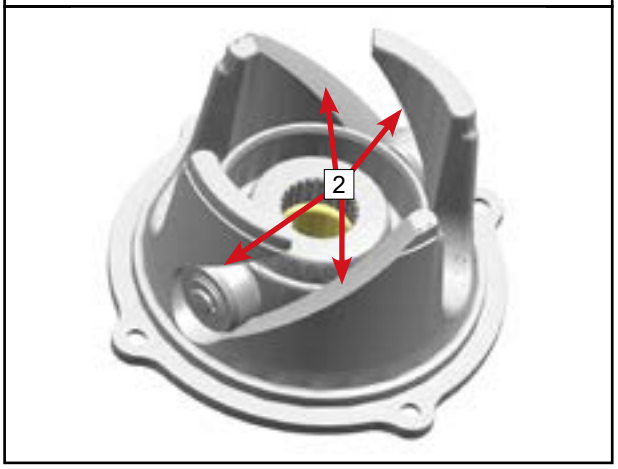

Check whether the driven roller assembly 1 has worn surfaces, cracks or other obvious damage. Replace (as a complete set) as necessary.

Check whether the spring seat 2 is severely worn or otherwise damaged. Replace it as necessary.

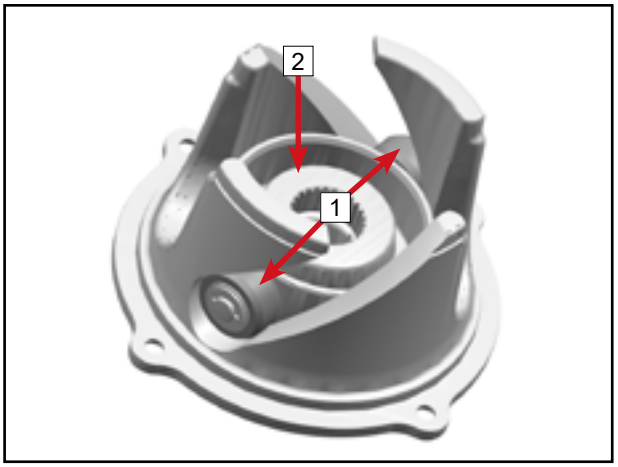

© CFMOTO Powersports, Inc. This manual is subject to all applicable copyright laws. Reproduction or duplication in any form, whole or in part, is strictly prohibited.

Driven Roller Disassembly / Reassembly

Remove the spring seat 4.
Remove the circlip 1 and discard it.
Remove the washer 2 and roller 3.
Remove the other roller in the same way.

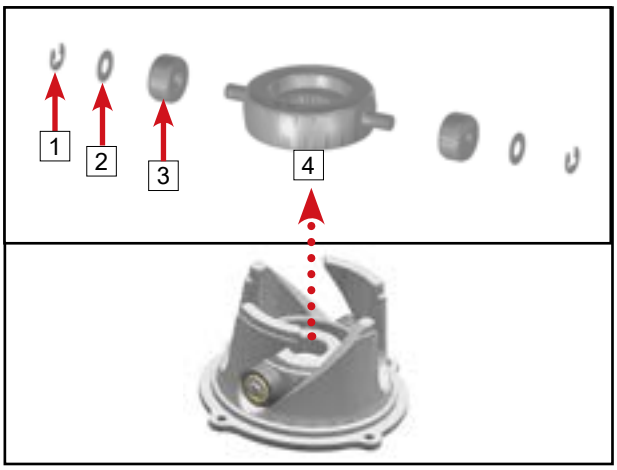

Reverse the removal procedures for installation. However, the following details should be noted:
— Use a new circlip 1.
— The rounded side of the circlip 1 faces the washer 2.

Driven Pulley Spring

Check the driven pulley spring 1 for severe deformation or cracks. Replace if any damage is found.

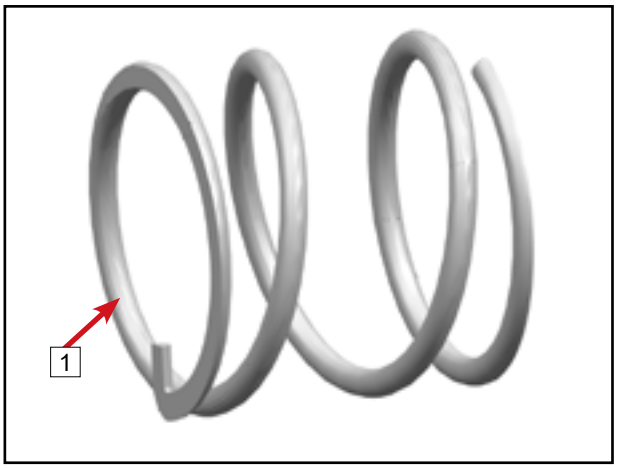

4.4.3.3 Reassembly

Driven Pulley Removal Tool 1 (See section 4.2 for details.)
Driven pulley guide sleeve 2 (See section 4.2 for details.)

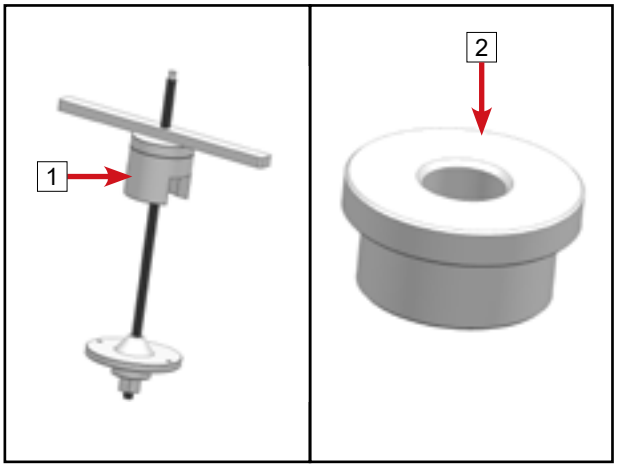

Install the driven pulley spring 1, and insert the end A of the spring into the groove of the sliding sheave.

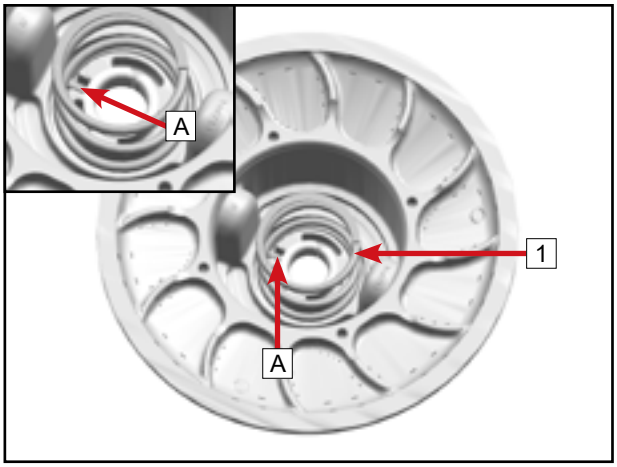

© CFMOTO Powersports, Inc. This manual is subject to all applicable copyright laws. Reproduction or duplication in any form, whole or in part, is strictly prohibited.

NOTE
Ensure to align the reference marks made prior to disassembly.

Place the Cam component [1] on the spring [2].

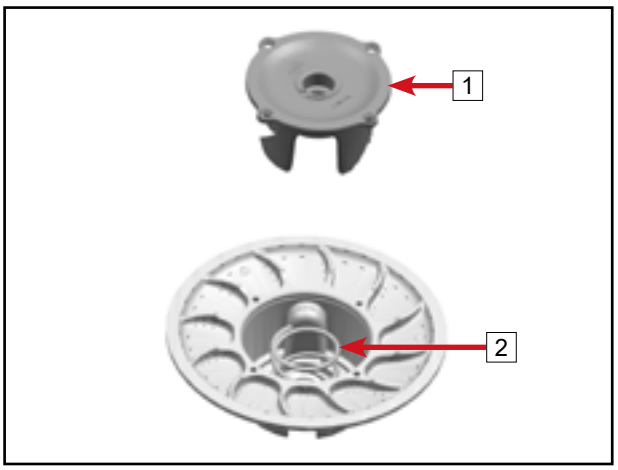

Attach driven pulley removal tool bracket [A] to the bench vise.
Install the sliding sheave [1] onto the bracket [A].
Install driven pulley guide sleeve [2].
Install the press sleeve [B] and handle [C] of the driven pulley removal tool.
Turn the handle [C] to compress the driven pulley spring until the cam component [3] reaches the correct position.

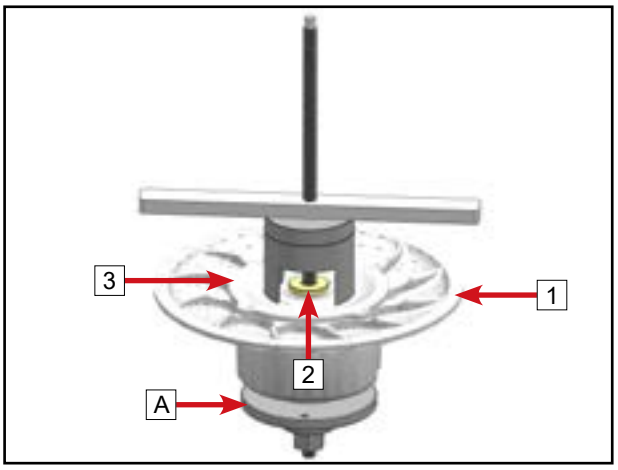

Install screw [1] and tighten it diagonally and cross-tighten to the specified torque.

Cam Screw [1]	
Torque	11 ~ 14 N•m (100 ~ 120 in-lb.)

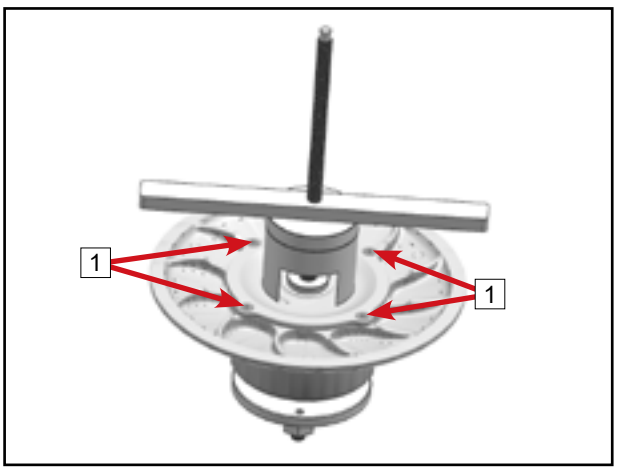

Once the sliding sheave component is fully assembled, ensure that the reference marks you made on the Cam and the sliding sheave are correctly aligned.

NOTE
If the sliding sheave component is not assembled as accurately as when disassembled, it will cause the driven pulley assembly to lose balance.

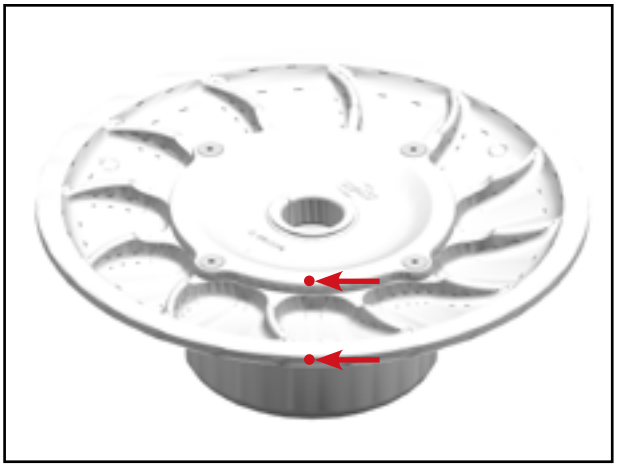

© CFMOTO Powersports, Inc. This manual is subject to all applicable copyright laws. Reproduction or duplication in any form, whole or in part, is strictly prohibited.

4.4.4 CVT Installation (TMT)

4.4.4.1 Drive Pulley, Driven Pulley and CVT Belt Installation

NOTE
Thoroughly clean the working surface and conical hole of the pulley, the conical surface of the crankshaft, and the drive belt before installation. There must be no foreign objects or oil stains.

NOTE
If the drive pulley and/or driven pulley have been replaced, confirm whether the driven pulley needs to be adjusted. Refer to section 4.4.5.

Install the sliding sheave component [2].
Install the adjustment shim [1].

NOTE
If multiple adjustment shims are to be installed, install the thick shim first and the thin one secondary.

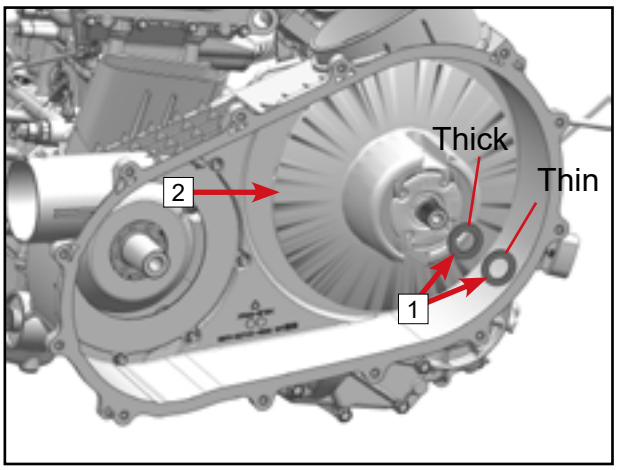

Install the fixed sheave [1].

NOTE
Make sure to align the reference marks made before removal. If the driven pulley assembly is not installed as accurately as when removed, it will cause the driven pulley assembly to lose balance.

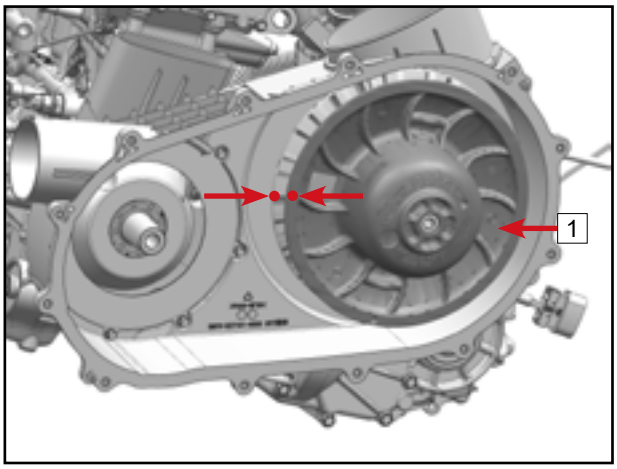

Install the washer [2] and driven pulley bolt [1].

NOTE
The small end of the conical surface of the washer [2] faces the bolt [1].

Pre-tighten the bolt [1].

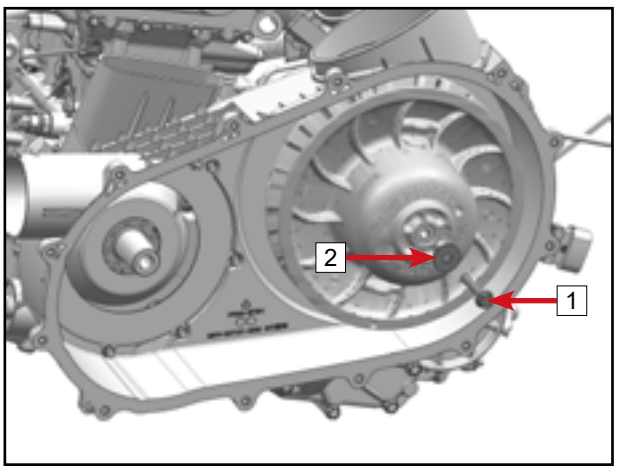

© CFMOTO Powersports, Inc. This manual is subject to all applicable copyright laws. Reproduction or duplication in any form, whole or in part, is strictly prohbited.

Screw the driven pulley fixed and sliding sheave separating tool [1] into the threaded hole of the driven pulley fixed sheave, and separate the fixed sheave and sliding sheave.

Driven pulley fixed and sliding sheave separating tool
(See section 4.2 for details.)

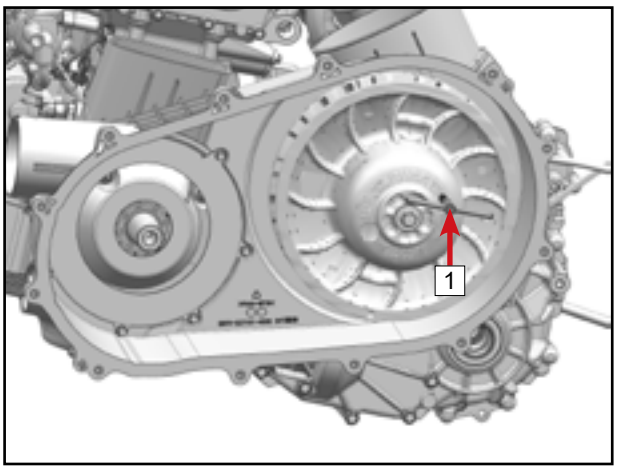

Put the drive belt [1] over the drive pulley [2].

NOTE
The direction of drive belt installation is the same as removal. (When viewed from above, the arrow marked on the belt points to the front of the vehicle)

Install drive belt and drive pulley in place. Remove the driven pulley fixed and sliding sheave separating tool.

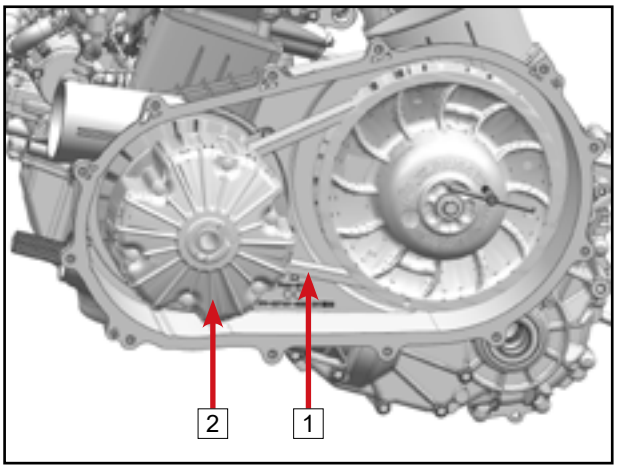

Install drive pulley bolt [1] and gasket [2]. Pre-tighten the bolt [1].

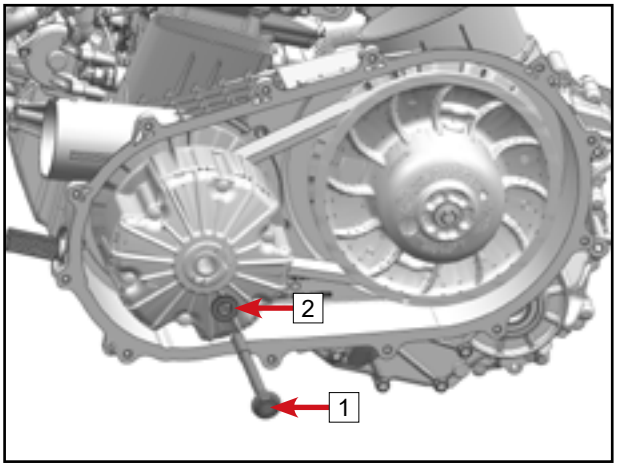

© CFMOTO Powersports, Inc. This manual is subject to all applicable copyright laws. Reproduction or duplication in any form, whole or in part, is strictly prohbited.

Use the CVT Stop Tool [A] to fix the drive pulley, and tighten the drive pulley bolt [1] to the specified torque.

Drive Pulley Bolt [1]	
Torque	130 ±10 N•m (95.8 ±7.3 ft-lb.)

CVT Stop Tool (See section 4.2 for details.)

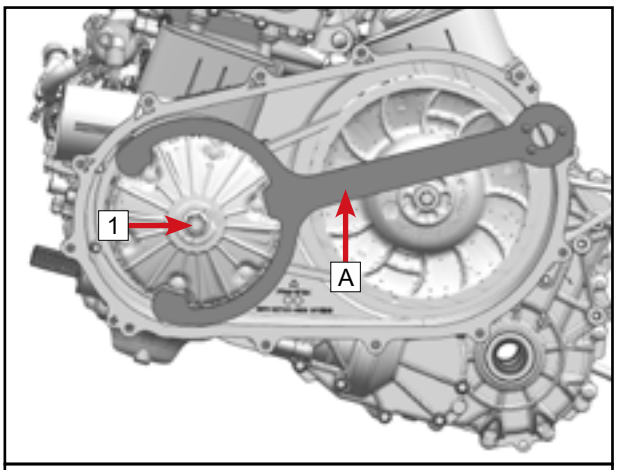

Use the CVT Stop Tool [A] to fix the driven pulley, and tighten the driven pulley bolt [2] to the specified torque.

Driven Pulley Bolt [2]	
Torque	85 ±5 N•m (62.7 ±3.7 ft-lb.)

Turn the driven pulley 5~7 turns by hand to pre-tighten the drive belt.

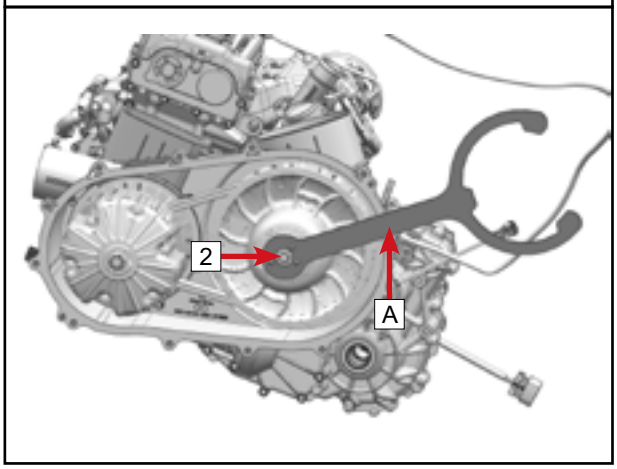

4.4.4.2 CVT Case Cover Installation

Install CVT case cover seal ring [1] onto CVT case cover [2].

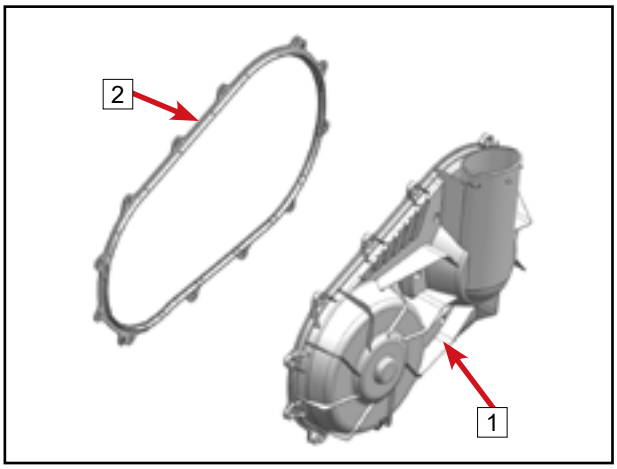

Install CVT case cover [2].

NOTE
The CVT cover bolt assembly should be tightened diagonally and cross-securely.

Install CVT case cover bolt assembly [1], and tighten to the specified torque.

CVT Case Cover Bolt [1]	
Torque	10 N•m (7.3 ft-lb.)

Reinstall the CVT air intake pipe.
Reinstall the other removed parts.

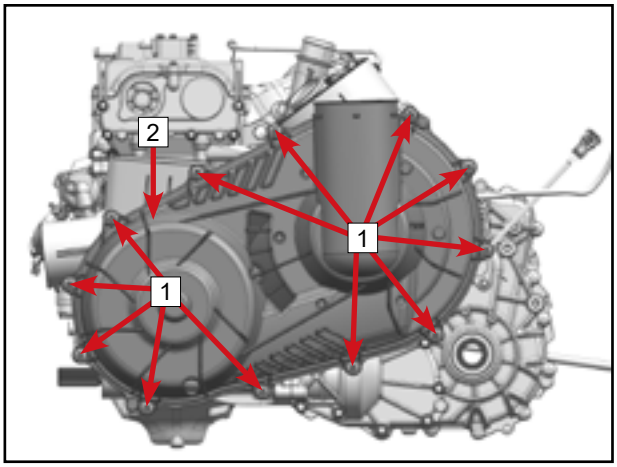

© CFMOTO Powersports, Inc. This manual is subject to all applicable copyright laws. Reproduction or duplication in any form, whole or in part, is strictly prohibited.

4.4.5 Driven Pulley Adjustment Procedure (TMT)

If the drive pulley and/or driven pulley have been replaced, confirm whether the driven pulley needs to be adjusted. The following are the confirmation and adjustment procedures:

1. Install the CVT drive pulley, driven pulley and belt as an assembly onto the engine and transmission shafts. Torque fasteners to specification. Do not install the CVT cover.

NOTE
An adjustment shim 1 approximately 1.5 mm thick must be installed.

2. Start the engine, lightly apply the throttle to briefly engage the CVT, then release it and allow the engine run at idle speed.
3. Visually confirm whether the driven pulley rotates with the engine at idle speed:
   a. If no rotation is observed, driven pulley adjustment is not required.
   b. If driven pulley rotation is observed, remove the driven pulley and select an adjustment shim 1 (or shims) of appropriate thickness from the chart provided and install it on the transmission shaft as shown, and then reinstall the driven pulley.

NOTE
Before removing the driven pulley fixed sheave, make reference marks on the driven pulley fixed and sliding sheaves to ensure correct installation. Otherwise, the driven pulley will lose balance.

NOTE
If multiple adjustment shims are to be installed, install the thicker shim first and then the thiner one.

   c. Repeat steps 2 and 3 until no driven pulley rotation is observed.

NOTE
During the adjustment of driven pulley, always follow the principle of gradually increasing the thickness of the adjustment shim.

4. Install the CVT cover.

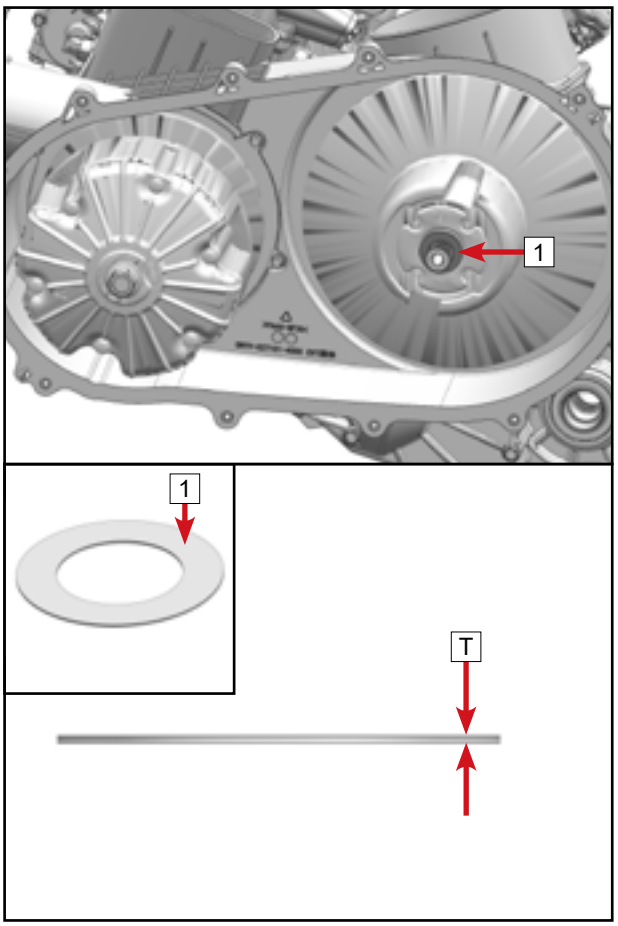

Driven Pulley Adjustment Shim 1	
Thickness T (mm)	Color Mark
0.381 ±0.03	/
0.762 ±0.03	/
1.27 ±0.03	/
1.524 ±0.03	/
2.032 ±0.03	/
2.282 ±0.03	/
3.048 ±0.03	/
4.064 ±0.03	/

© CFMOTO Powersports, Inc. This manual is subject to all applicable copyright laws. Reproduction or duplication in any form, whole or in part, is strictly prohbited.

4.5 Transmission

Z10 and Z10-4 vehicles are equipped with a transmission main input shaft that is mated to the TMT CVT system as shown:

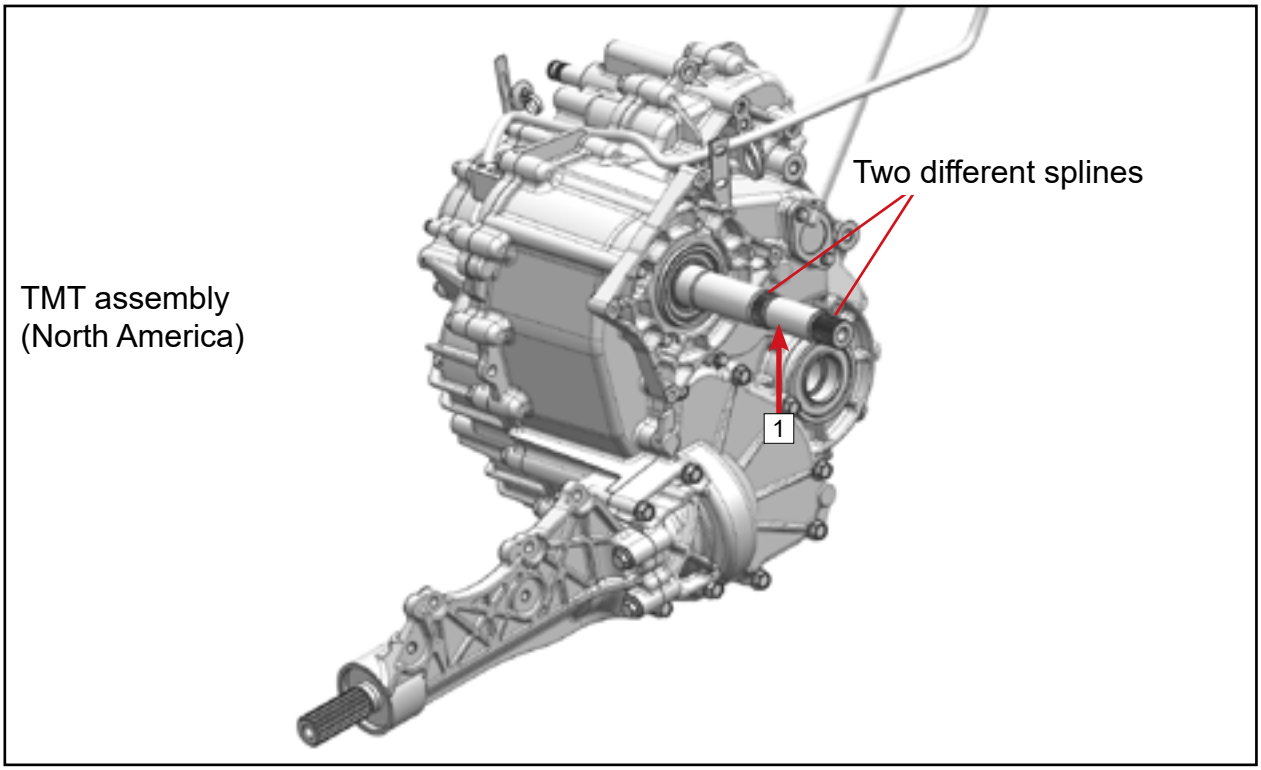

NOTE
This section references the TMT transmission example in the instructions and images. Make note of the special tools required for proper disassembly and reassembly of the TMT design.

© CFMOTO Powersports, Inc. This manual is subject to all applicable copyright laws. Reproduction or duplication in any form, whole or in part, is strictly prohbited.

4.5.1 Transmission Special Tools - Essential

M34 Nut Sleeve

0NYT-060009-922-001-Z

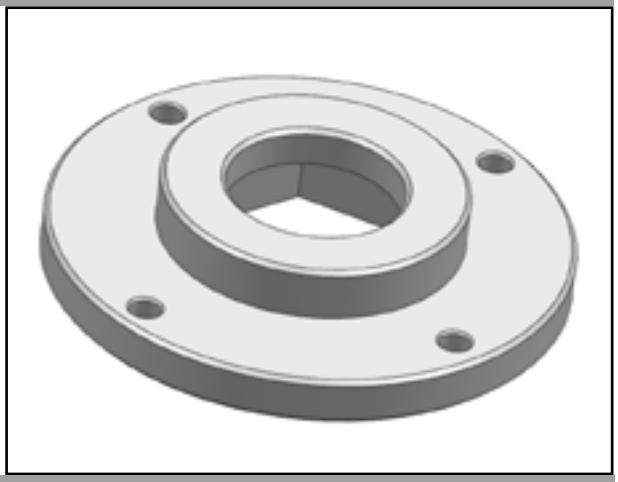

Bevel Gear Side Clearance Measuring Block

0NYK-066201-922-002

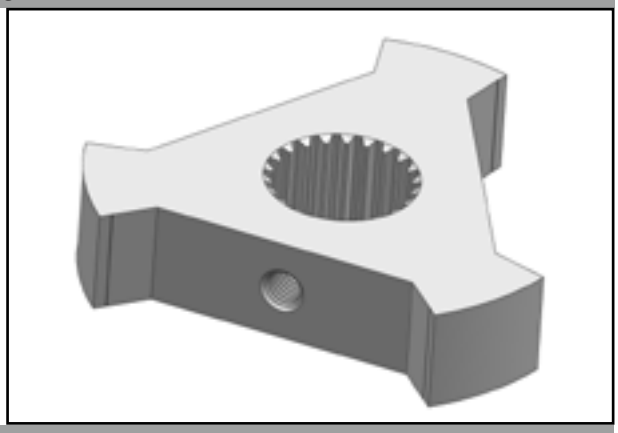

Drive Bevel Gear Stopping Tool

0NYK-066101-922-001

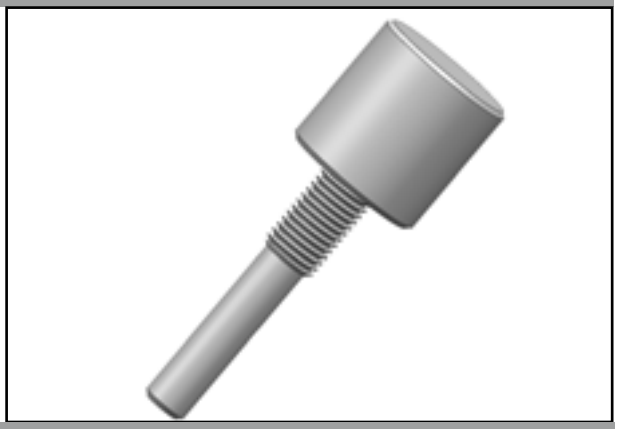

Driven Bevel Gear Press Tool

0NYK-066201-922-001

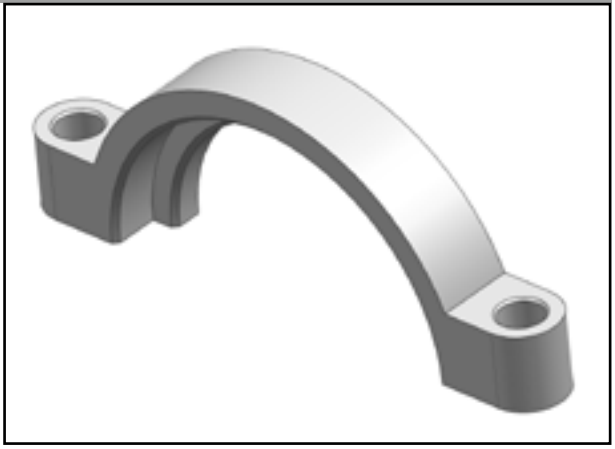

© CFMOTO Powersports, Inc. This manual is subject to all applicable copyright laws. Reproduction or duplication in any form, whole or in part, is strictly prohibited.

Transmission Special Tools - Essential

Drive Bevel Gear Nut Holder

0NYT-060015-922-001-Z

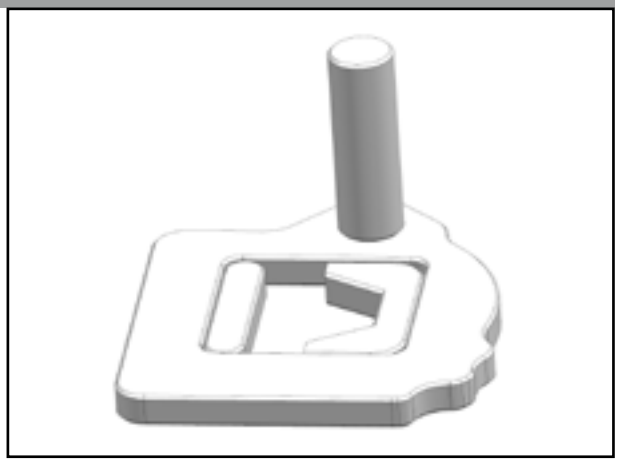

4.5.1.1 Transmission Special Tools - TMT

These special tools are required in combination with the tools in section 4.5.1 to service the TMT Transmission.

Spline Sleeve

0NYT-061001-922-001-Z
(For TMT Transmission)

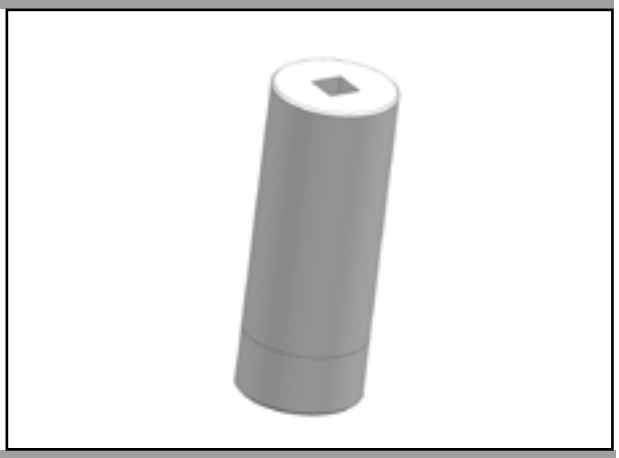

Main Shaft Stopping Tool

0NYT-061001-922-002-Z
(For TMT Transmission)

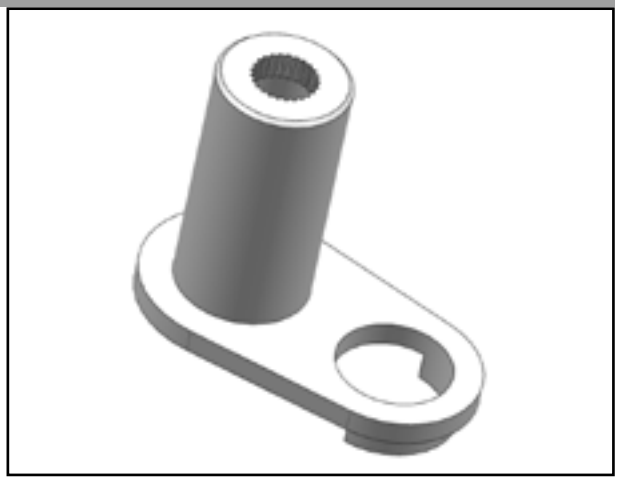

© CFMOTO Powersports, Inc. This manual is subject to all applicable copyright laws. Reproduction or duplication in any form, whole or in part, is strictly prohbited.

4.5.2 Transmission Exploded Views

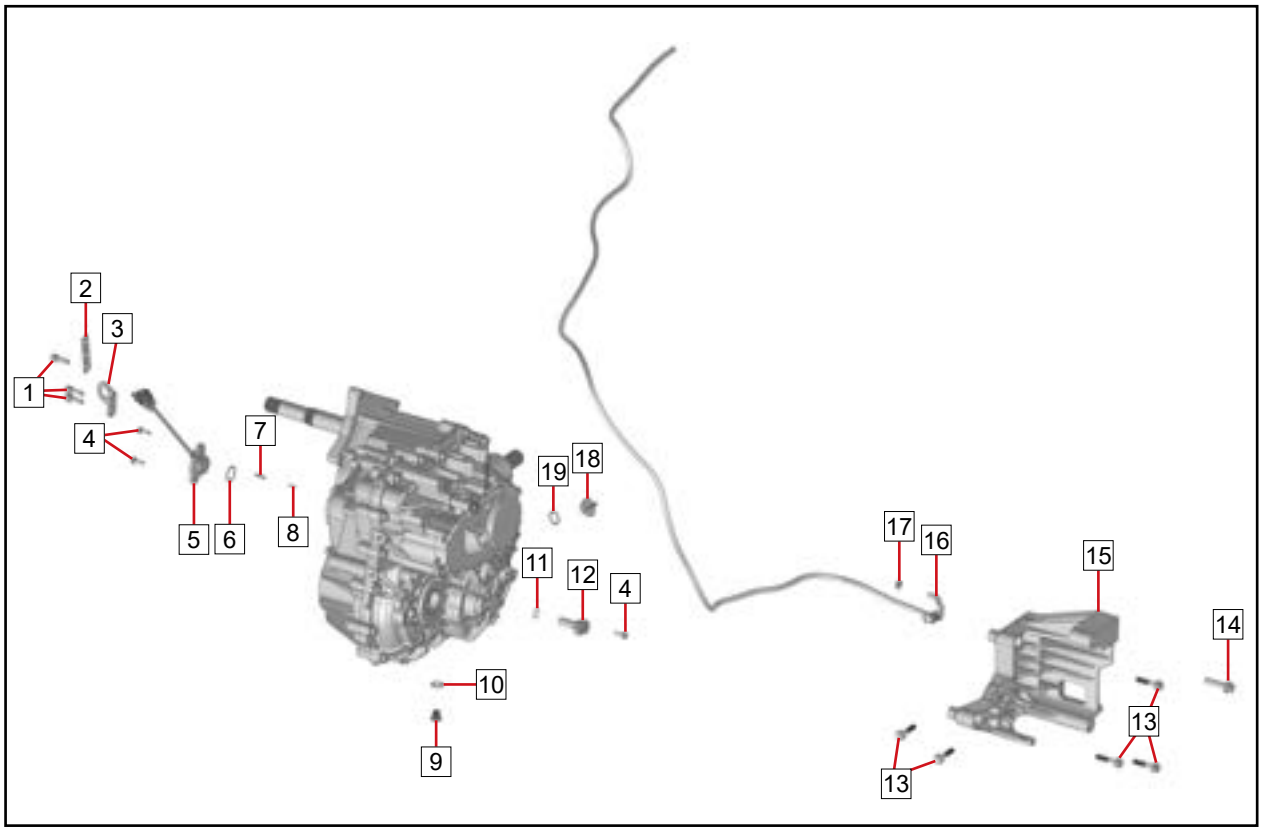

Number	Description	Remark
1	Screw M8×20	27 N•m (19.9 ft-lb.)
2	Cable bracket 2	
3	Front hook	
4	Bolt M6×16	10 N•m (7.3 ft-lb.)
5	Gear sensor	
6	O-ring	GO
7	Ball Contact	
8	Contact spring	
9	Magnetic drain bolt M12×1.5	25 N•m (18.4 ft-lb.)
10	Washer 12	
11	O-ring 13×2	GO
12	Speedometer sensor	
13	Bolt M8×38	27 N•m (19.9 ft-lb.)
14	Bolt M10×40	45 N•m (33.2 ft-lb.)
15	Gearbox bracket 2	
16	Breather hose assembly	
17	Variable one-ear clamp Φ9.5	N
18	Oil filler plug	
19	O-ring 16.8×3.1	GO

GO: Apply gear oil
N: Parts that must be replaced with new after removal

© CFMOTO Powersports, Inc. This manual is subject to all applicable copyright laws. Reproduction or duplication in any form, whole or in part, is strictly prohibited.

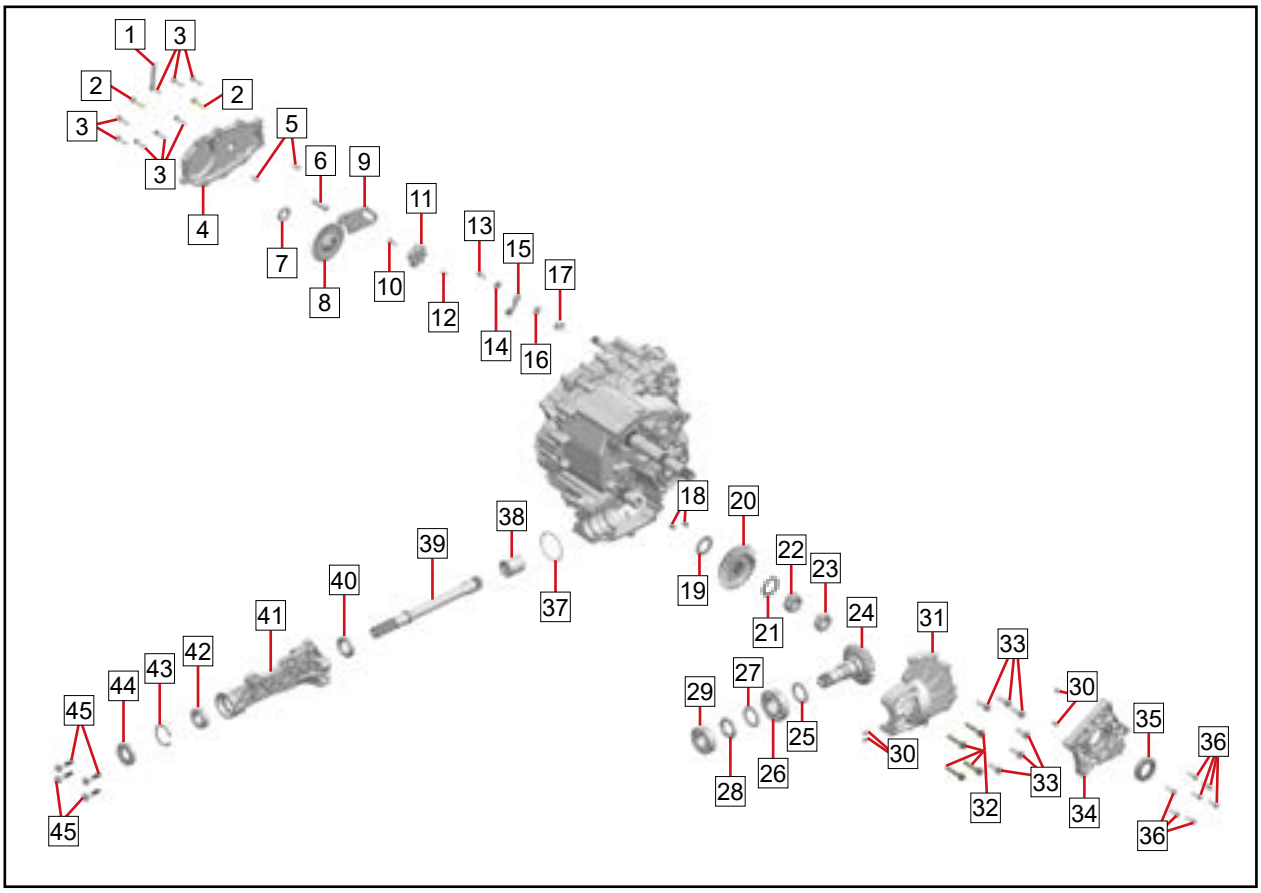

Number	Description	Remark
1	Clamp assembly	
2	Bolt M6×32	10 N•m (7.3 ft-lb.)
3	Bolt M6×25	10 N•m (7.3 ft-lb.)
4	Gearbox gearshift cover	
5	Dowel pin Φ8×14	
6	Parking swing arm shaft	
7	Nut M22×1.5	TL, 170 N•m (125.3 ft-lb.)
8	Parking gear	
9	Parking swing arm	
10	Screw M6×16	TL, 10 N•m (7.3 ft-lb.)
11	Gearshift drum cam	
12	Needle roller P4×15.8	
13	Bolt M6×16	TL, 10 N•m (7.3 ft-lb.)
14	Shift position swing arm collar	
15	Shift position swing arm sub-assembly	
16	Washer 6.3×19×1.2	
17	Shift position swing arm spring	
18	Roller 8×12	
19	Drive bevel gear adjusting washer	
20	Drive bevel gear	GO
21	Drive bevel gear adjusting washer	Mark as F, used as a common washer.
22	Nut M26×1.5×17.5	LH, 250 N•m (184.3 ft-lb.)
23	Nut M26×1.5	LH, TL, 300 N•m (221.2 ft-lb.)

© CFMOTO Powersports, Inc. This manual is subject to all applicable copyright laws. Reproduction or duplication in any form, whole or in part, is strictly prohibited.

Number	Description	Remark
24	Driven bevel gear shaft	GO
25	Driven bevel gear adjusting washer	
26	Bearing 6207	GO
27	Driven bevel gear bearing washer	
28	Nut M34×1.5×15	TL, 200 N•m (147.5 ft-lb.)
29	Bearing 6206	GO
30	Dowel pin Φ6×12	
31	Gearbox bevel gear cover	
32	Bolt M8×45	TL, SS, 35 N•m (25.8 ft-lb.)
33	Bolt M8×28	TL, SS, 35 N•m (25.8 ft-lb.)
34	Gearbox input shaft cover	
35	Oil seal 32×55×10	HG, CR
36	Bolt M6×22	10 N•m (7.3 ft-lb.)
37	O-ring 63×2.5	GO
38	Output spline sleeve	GO
39	Output spline shaft	GO
40	Bearing 61906	GO
41	Gearbox bracket 1	
42	Bearing 6005	GO
43	Circlip for hole 47B	N
44	Oil seal 25×52×7	HG, CR
45	Bolt M8×38	27 N•m (19.9 ft-lb.)

GO: Apply gear oil.
TL: Apply thread locker.
HG: Apply high-temperature grease.
CR: Apply cylindrical surface retaining adhesive.
LH: Left-hand thread.
SS: Follow the specified tightening sequence.
N: Parts that must be replaced with new after removal.

© CFMOTO Powersports, Inc. This manual is subject to all applicable copyright laws. Reproduction or duplication in any form, whole or in part, is strictly prohbited.

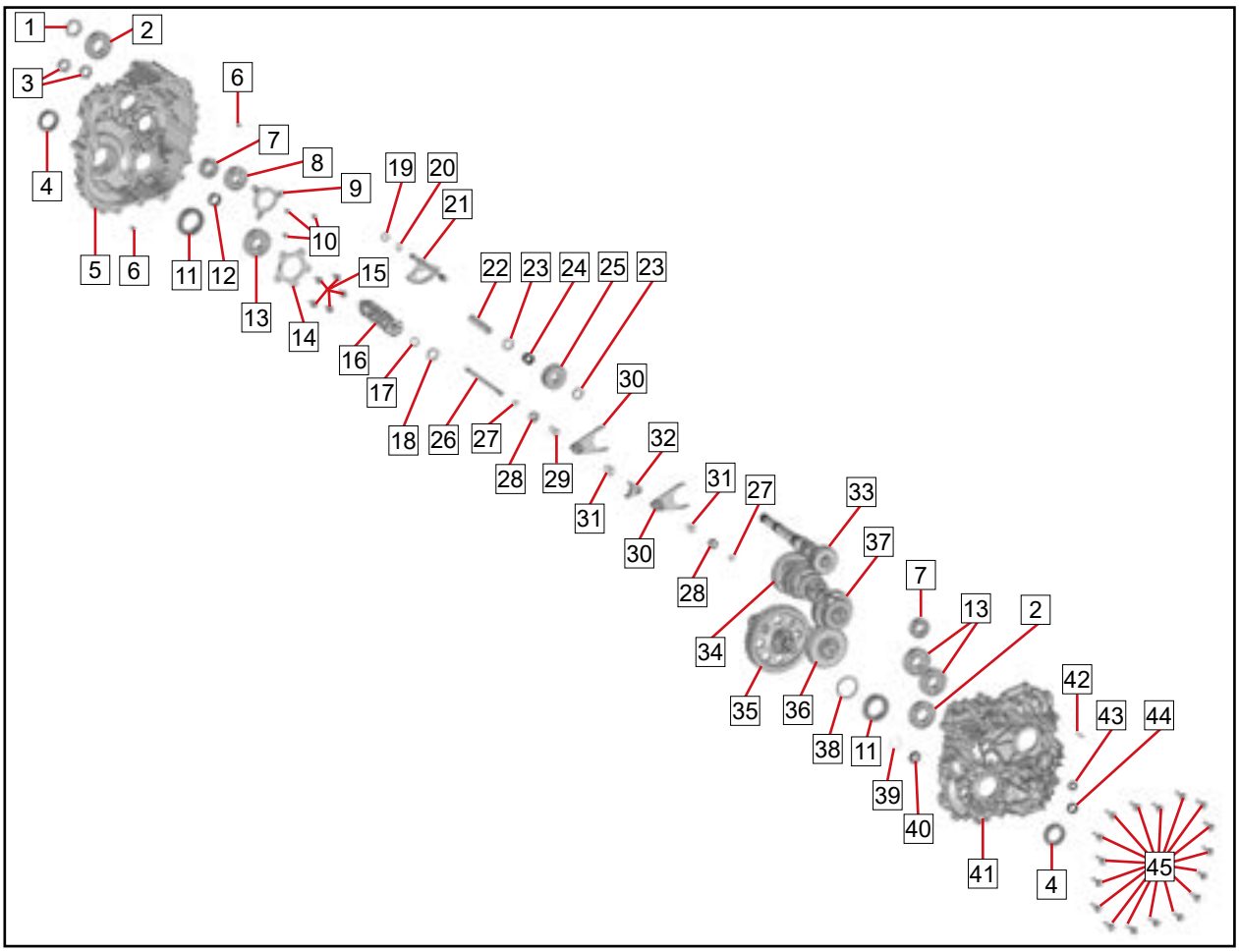

Number	Description	Remark
1	Nut M34×1.5×11.5	TL, 200 N•m (147.5 ft-lb.)
2	Bearing 6207	GO
3	Nut M24×1.5	TL, 170 N•m (125.3 ft-lb.)
4	Countershaft oil seal 40×58×8	HG, CR
5	LH Gearbox	
6	Roller 8×12	
7	Bearing 6205	GO
8	Bearing 6305	GO
9	Bearing press plate	
10	Bolt M6×16	TL, 14 N•m (10.3 ft-lb.)
11	Tapered roller bearing	GO
12	Needle bearing HK2512	GO
13	Bearing 6306	GO
14	Bearing press plate 1	
15	Hex flange bolt M8×20	TL, 35 N•m (25.8 ft-lb.)
16	Transmission shift drum assembly	GO
17	Circlips for shaft 20	N
18	Washer 20×35×1	
19	Washer14×22×1	
20	Circlips for shaft 14	N
21	Shift sector gear assembly	GO

© CFMOTO Powersports, Inc. This manual is subject to all applicable copyright laws. Reproduction or duplication in any form, whole or in part, is strictly prohbited.

Number	Description	Remark
22	Reverse intermediate gear shaft	GO
23	Washer 20.5×32×1.5	
24	Needle bearing 20×26×18	GO
25	Reverse intermediate gear	GO
26	Gearshift fork shaft	GO
27	Circlip for shaft 12	N
28	Spring seat	
29	LH spring	
30	Gearshift fork	GO
31	Center spring	
32	Fork shaft spring seat	GO
33	Main shaft assembly	GO
34	Countershaft assembly	GO
35	Rear gear case gear	GO
36	Output shaft assembly	GO
37	Intermediate shaft assembly	GO
38	Adjusting washer 61×50.5	
39	Wire clamp	
40	Oil level viewer	
41	RH gearbox	
42	Breather hose joint	
43	Oil seal SD15×25×5	HG, CR
44	Needle bearing HK2010	GO
45	Bolt M8×35	SS, 26 N•m (19.2 ft-lb.)

GO: Apply gear oil.
TL: Apply thread locker.
HG: Apply high-temperature grease.
CR: Apply cylindrical surface retaining adhesive.
SS: Follow the specified tightening sequence.
N: Parts that must be replaced with new after removal.

© CFMOTO Powersports, Inc. This manual is subject to all applicable copyright laws. Reproduction or duplication in any form, whole or in part, is strictly prohbited.

4.5.3 Transmission Overhaul

To remove the transmission system from the engine, refer to the “Engine Overhaul” section in Chapter 05.

Refer to the “Engine Assembly” section in Chapter 05 for installation of the transmission system.

4.5.3.1 Disassembly

NOTE
Before removal, the gear oil should be completely drained. refer to the section Drain Engine Oil and Gear Oil in Chapter 05.

Gearbox Bracket 1 Assembly Removal

Cross diagonally loosen the bolts [1] then remove them.

Remove gearbox bracket 1 assembly [2].

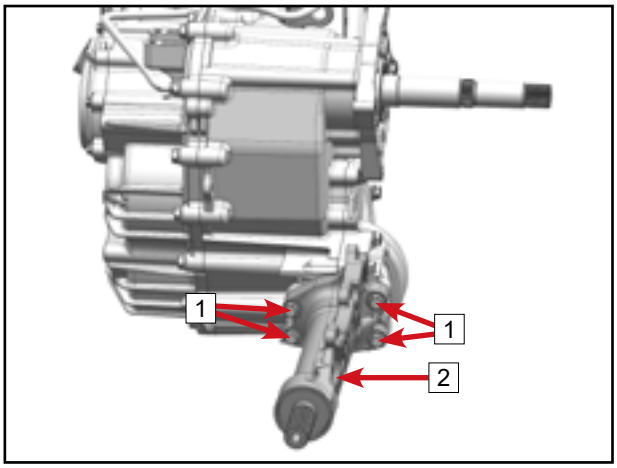

Remove dowel pin [1].

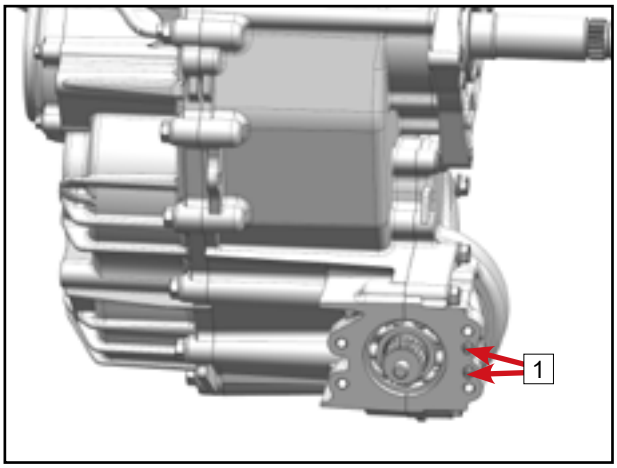

Remove output spline sleeve [1].

Remove O-ring [2].

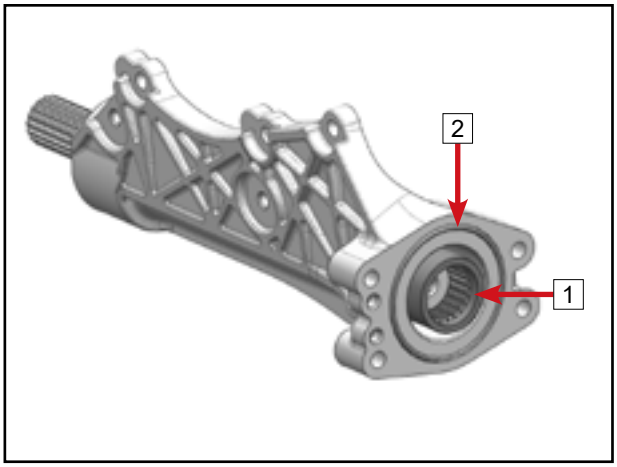

© CFMOTO Powersports, Inc. This manual is subject to all applicable copyright laws. Reproduction or duplication in any form, whole or in part, is strictly prohbited.

Remove the output spline shaft [1] in the direction of the arrow.

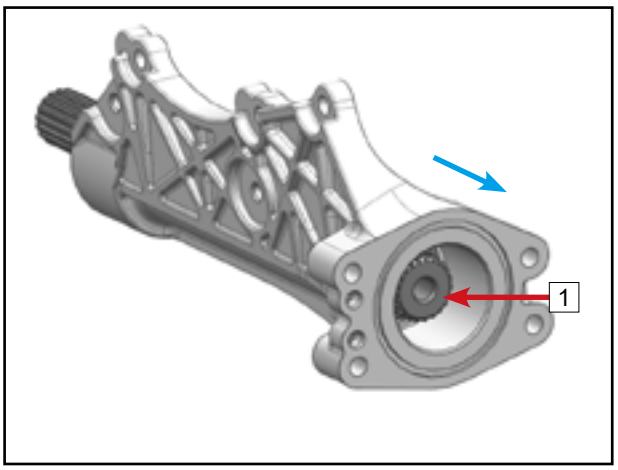

Gear Sensor Removal

Remove bolts [1].

Remove gear sensor [2].

Gear sensor inspection details in the Electrical chapter.

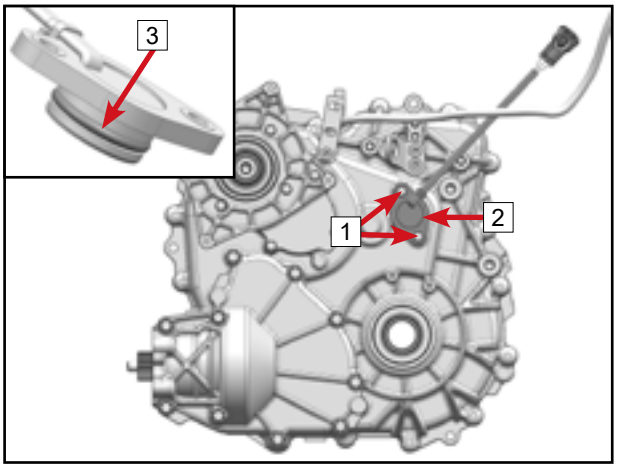

Remove ball contact [1].

Remove contact spring [2].

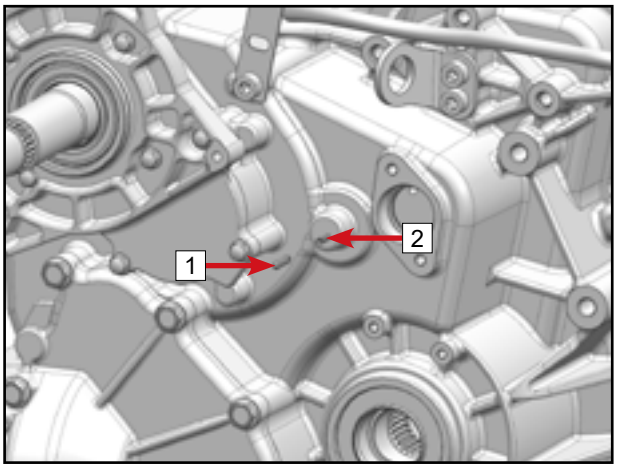

Front Hook Removal

Remove screw [1].

Remove front hook [2].

Remove screw [3].

Remove cable bracket 2 [4].

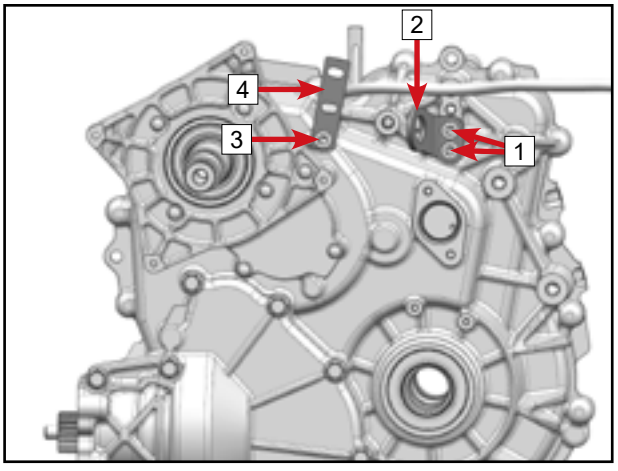

© CFMOTO Powersports, Inc. This manual is subject to all applicable copyright laws. Reproduction or duplication in any form, whole or in part, is strictly prohibited.

Breather Hose Assembly and Speedometer Sensor Removal

Release the variable one-ear clamp [1].
Remove breather hose assembly [2].

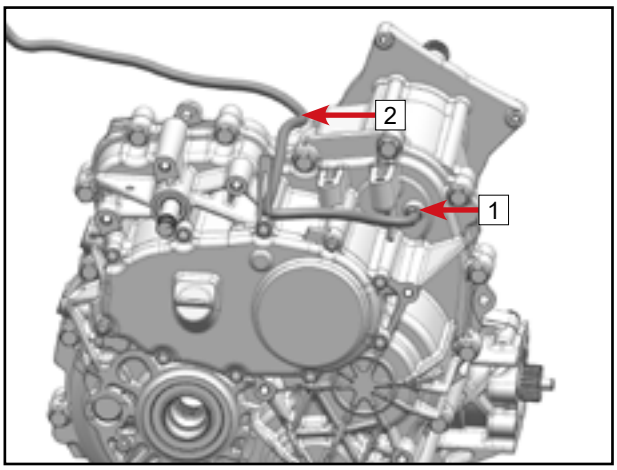

Remove bolt [1].
Remove speedometer sensor [2].

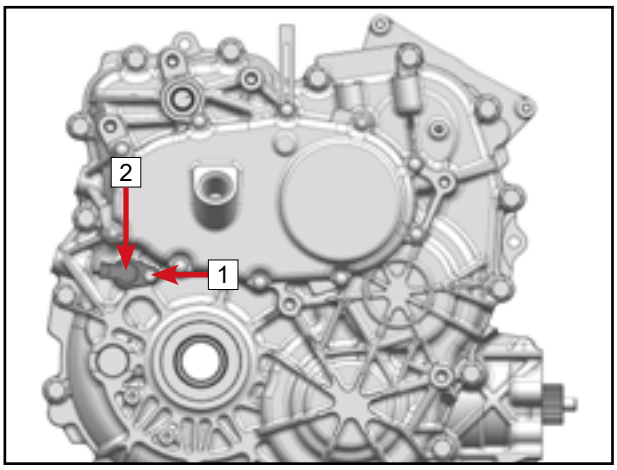

Gearbox Disassembly

Cross diagonally loosen the bolts [1] then remove them.
Remove gearbox input shaft cover assembly [2].

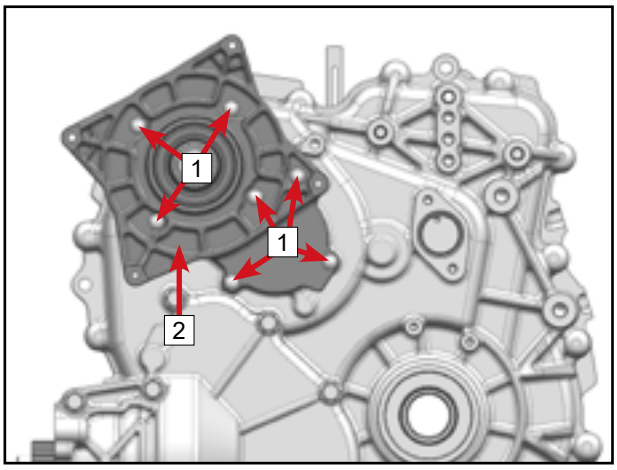

Remove dowel pin [1].

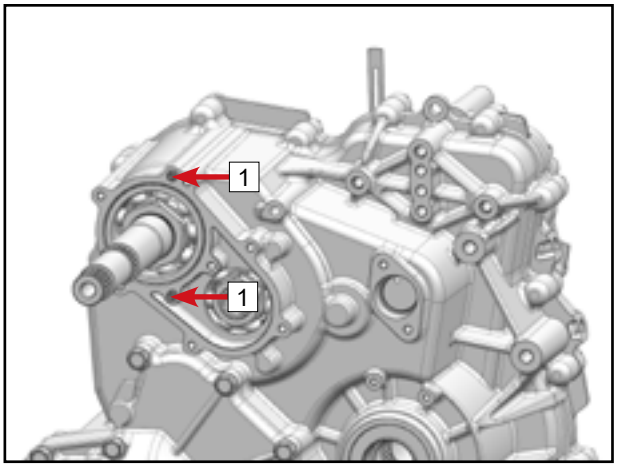

© CFMOTO Powersports, Inc. This manual is subject to all applicable copyright laws. Reproduction or duplication in any form, whole or in part, is strictly prohibited.

Install M34 nut sleeve [1] and Gearbox input shaft cover bolt [2].
Install the spline sleeve [3] onto the spindle.
Rotate the spline sleeve [3] clockwise to loosen the nut M34×1.5×11.5 [4].
Remove tool [3] and tool [1].
Remove nut [4].

M34 nut sleeve
(See section 4.5.1 for details.)
Spline sleeve
(See section 4.5.1 for details.)

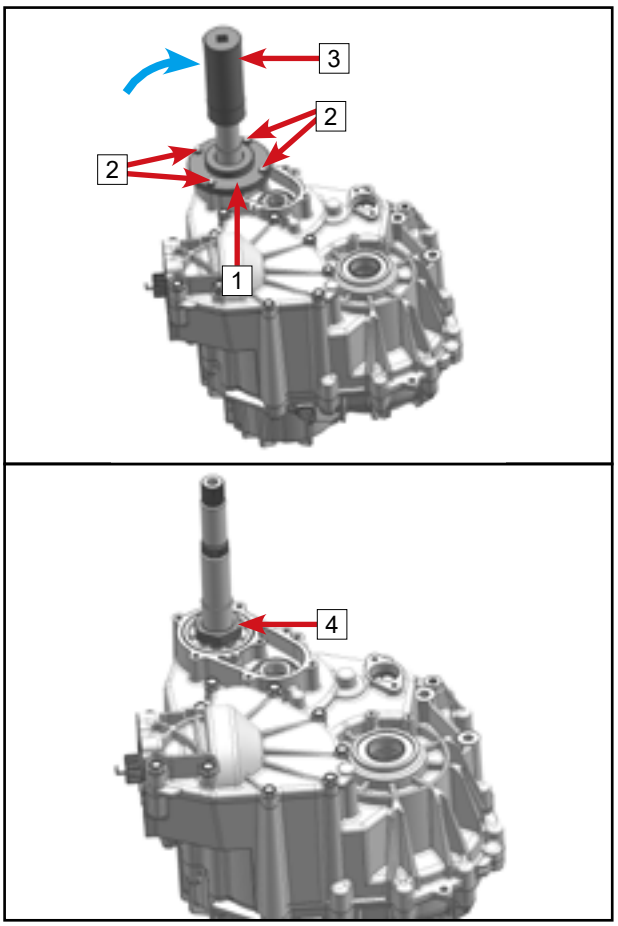

Cross diagonally loosen the bolts [1] and bolts [2] then remove them.
Remove gearbox bevel gear cover [3].

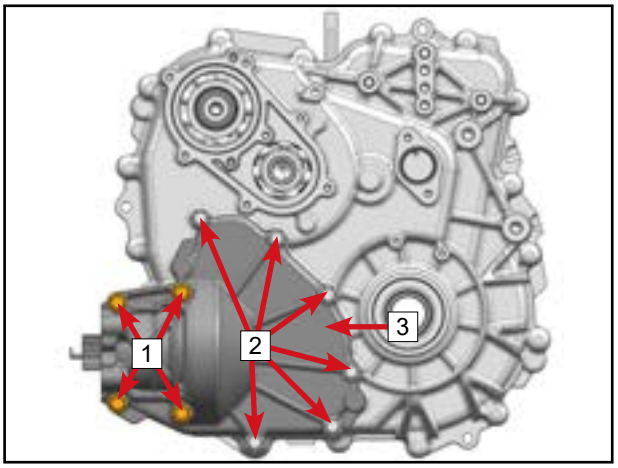

Remove driven bevel gear shaft assembly [1].

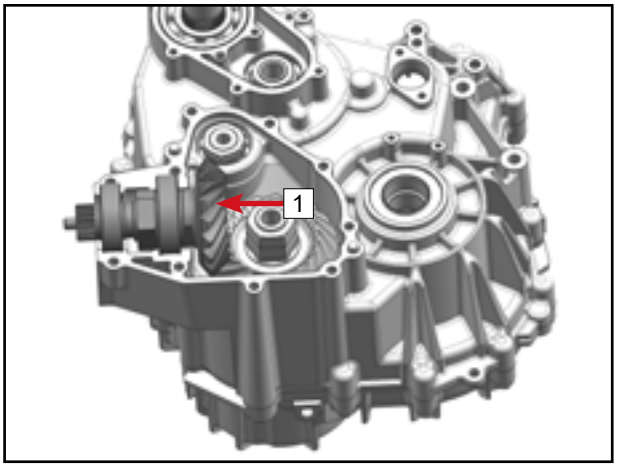

© CFMOTO Powersports, Inc. This manual is subject to all applicable copyright laws. Reproduction or duplication in any form, whole or in part, is strictly prohibited.

Set the gearbox to the low gear position.
Install main shaft stopping tool A.

Main Shaft Stopping Tool
(See section 4.5.1 for details.)

Remove nut M26×1.5 1 (left-hand thread).

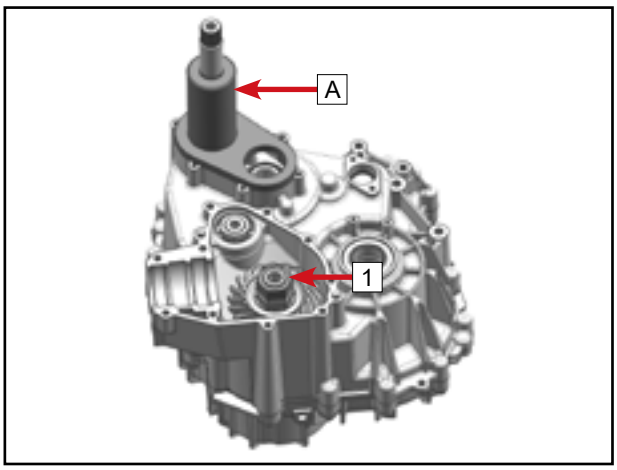

Remove nut M26×1.5×17.5 1 (left-hand thread).
Remove the drive bevel gear adjusting washer (group marked F) 2 used as a common washer.
Remove drive bevel gear 3.

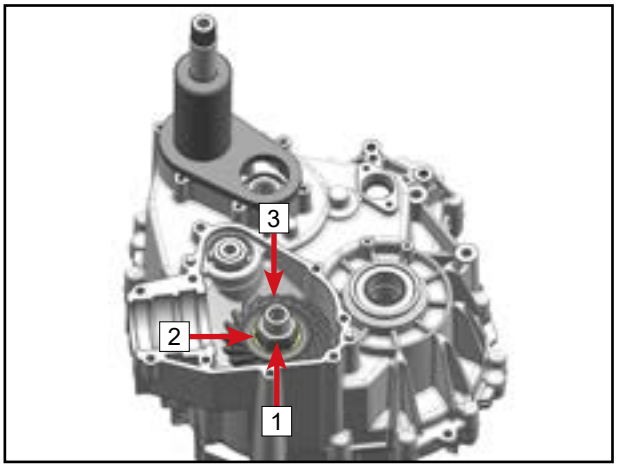

Remove drive bevel gear adjusting washer 1.

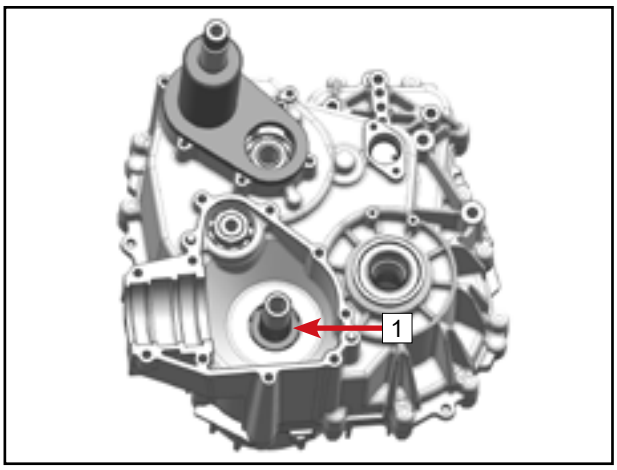

Remove nuts M24×1.5 1.
Remove main shaft stopping tool A.

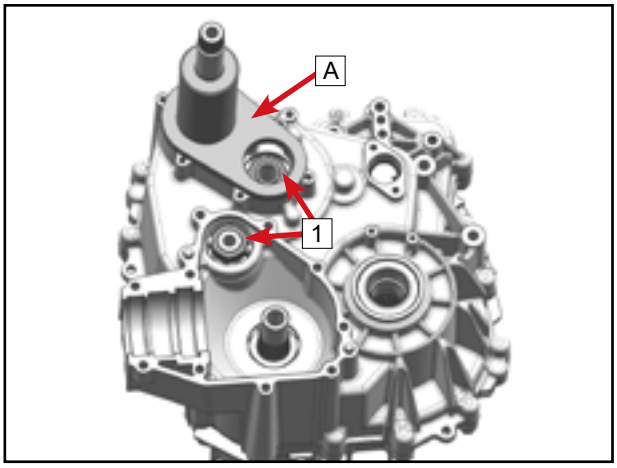

© CFMOTO Powersports, Inc. This manual is subject to all applicable copyright laws. Reproduction or duplication in any form, whole or in part, is strictly prohibited.

Cross diagonally loosen the bolts [1] and bolts [2] then remove them.
Remove clip [3] and gearbox gearshift cover [4].

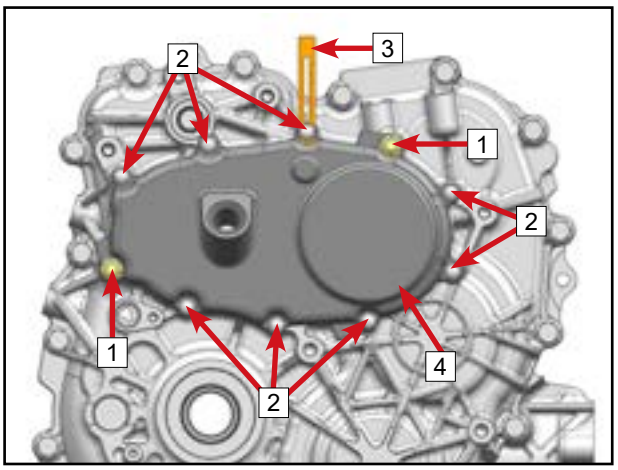

Remove dowel pin [1].

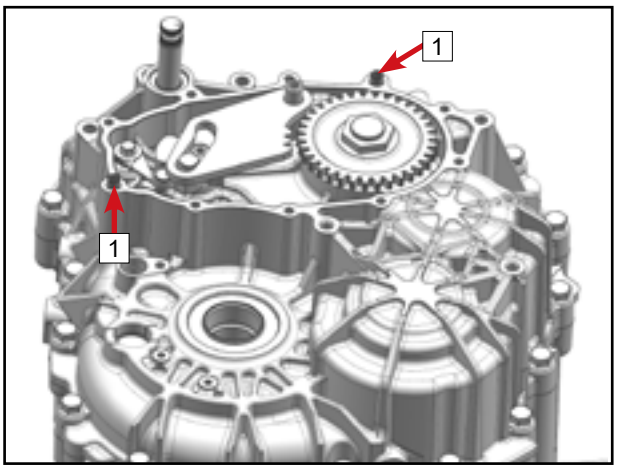

Install main shaft stopping tool [A].

Main Shaft Stopping Tool
(See section 4.5.1 for details.)

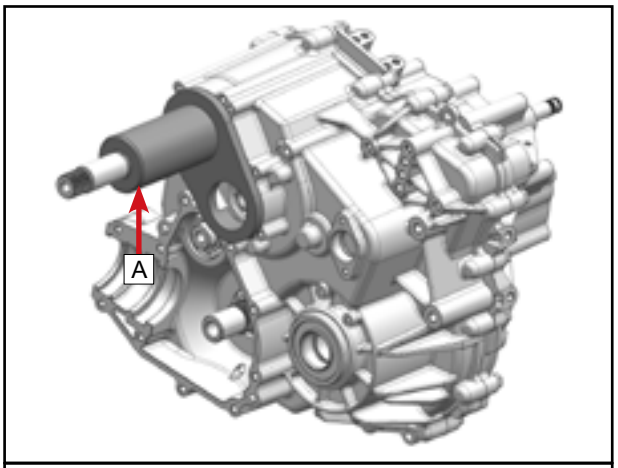

Remove nut M22×1.5 [1].
Remove parking gear [2].
Remove parking swing arm shaft [3].
Remove parking swing arm [4].
Remove main shaft stopping tool [A].

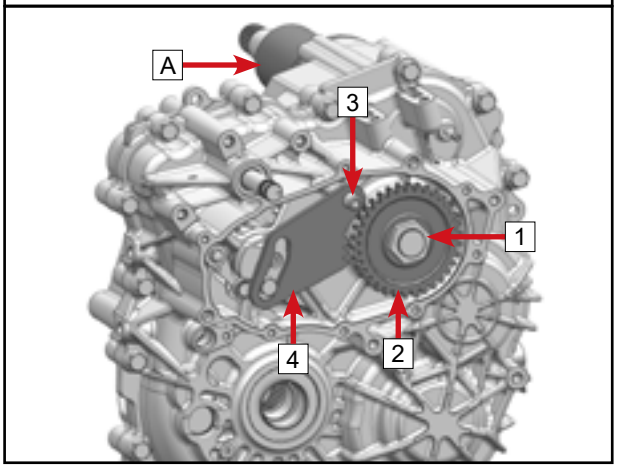

© CFMOTO Powersports, Inc. This manual is subject to all applicable copyright laws. Reproduction or duplication in any form, whole or in part, is strictly prohibited.

Remove screw 1.
Push the shift positioning swing arm along the direction of the arrow and remove the positioning cam 1.

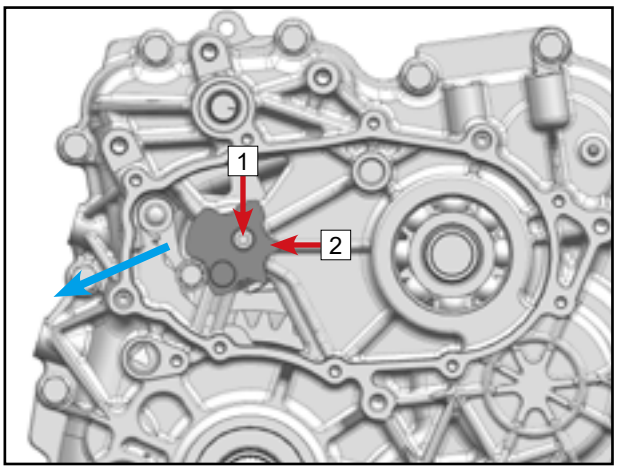

Remove needle roller 1.

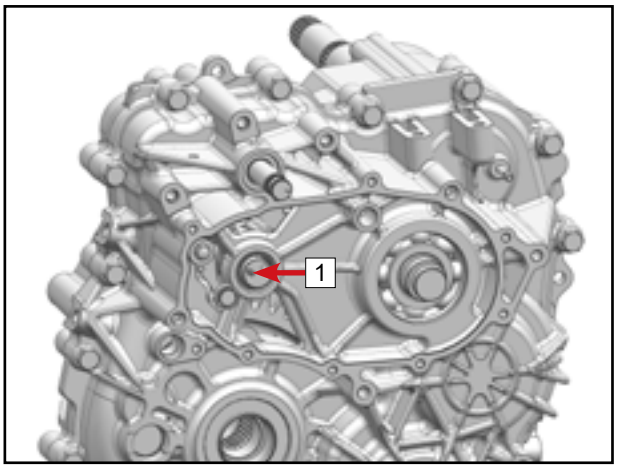

Remove bolt 1, shift positioning swing arm collar 2, shift positioning swing arm sub-assembly 3, washer 4 and shift positioning swing arm spring 5.

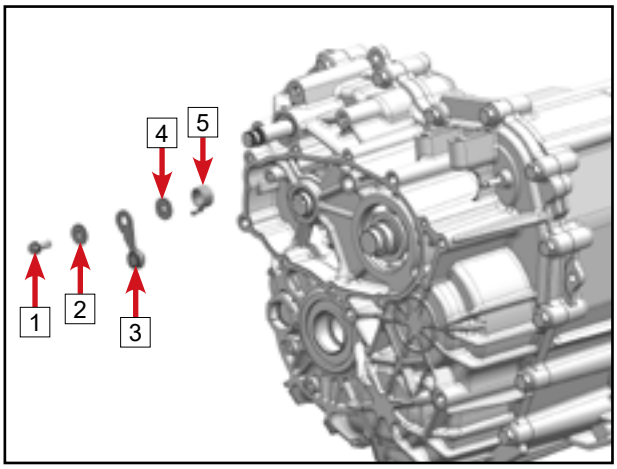

Cross diagonally loosen the bolts 1 then remove them.

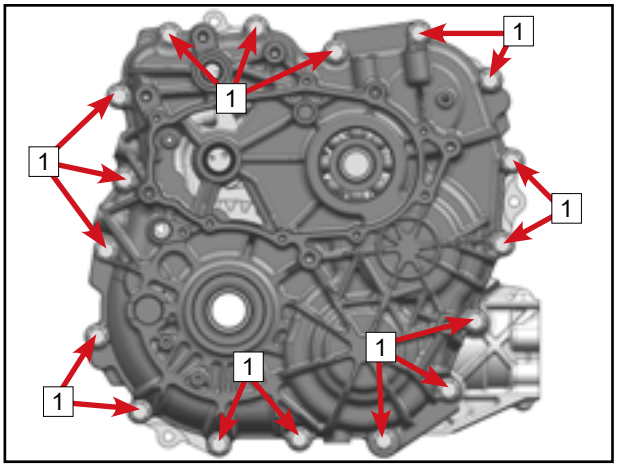

© CFMOTO Powersports, Inc. This manual is subject to all applicable copyright laws. Reproduction or duplication in any form, whole or in part, is strictly prohibited.

Use a straight screwdriver to separate the RH gearbox [1] and LH gearbox [2].

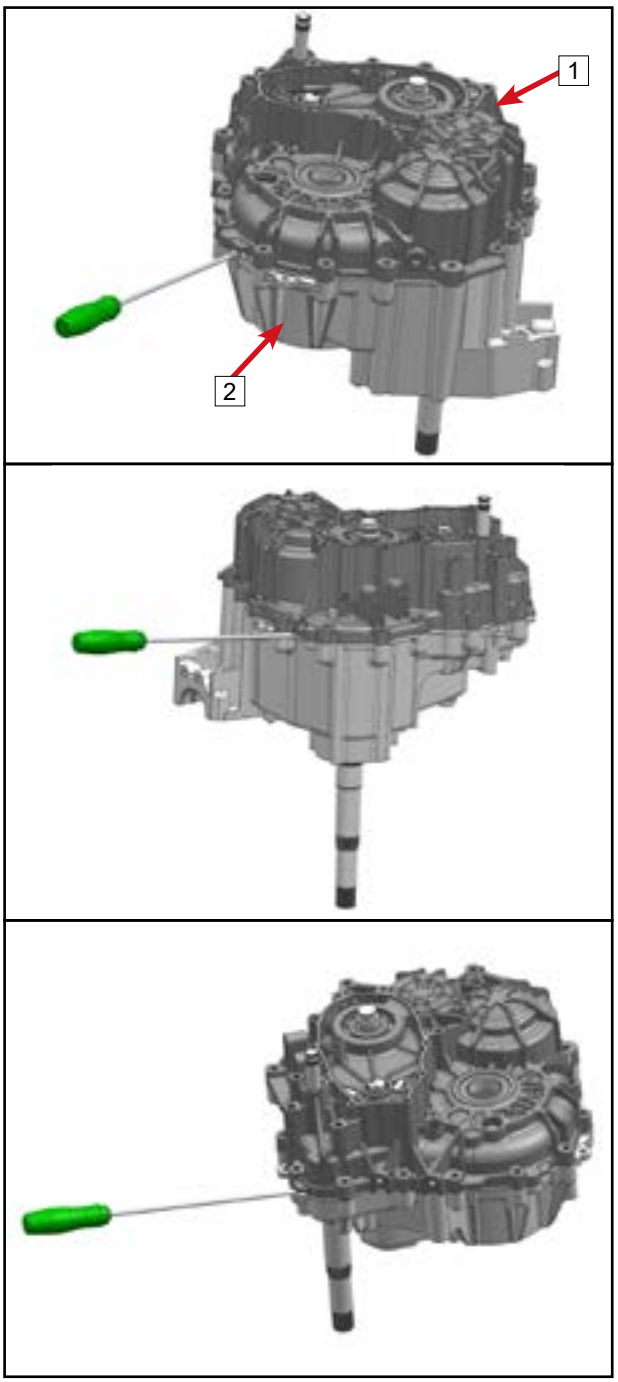

© CFMOTO Powersports, Inc. This manual is subject to all applicable copyright laws. Reproduction or duplication in any form, whole or in part, is strictly prohibited.

Remove washer 1.

NOTE

The washer 1 may adhere to RH gearbox, do not lose it during removal.

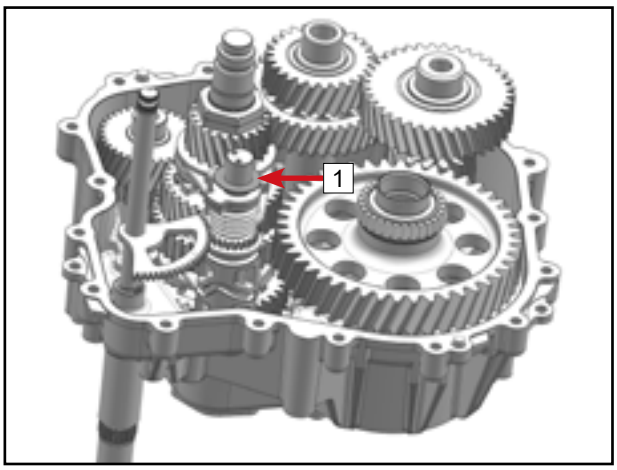

Set gearbox at neutral gear.

NOTE

When in neutral, the point mark A should be aligned with the point mark B.

Remove shift sector gear assembly 1.

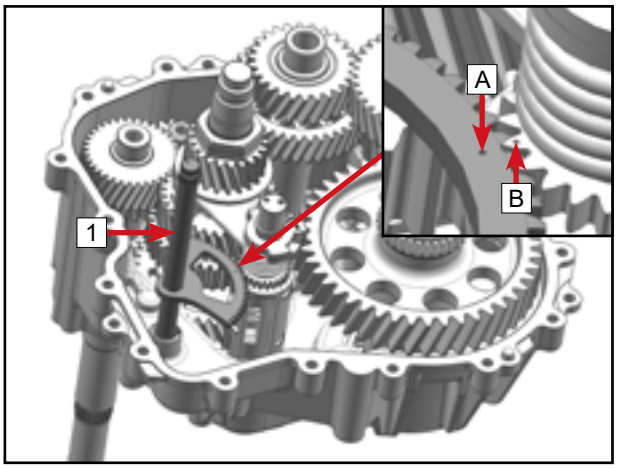

Remove washer 1.

NOTE

The washer 1 usually adheres to LH gearbox, do not lose it during removal.

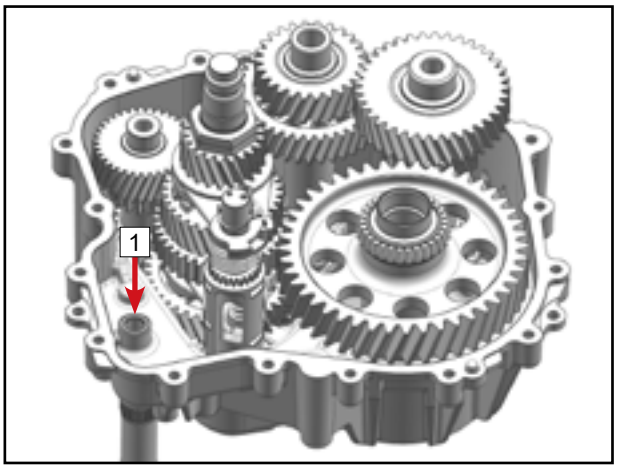

Remove output shaft assembly 1.
Remove inner ring 2 of the bearing.
Mark the inner ring 2 of the bearing in order to reinstall it back to its original position during reinstallation.

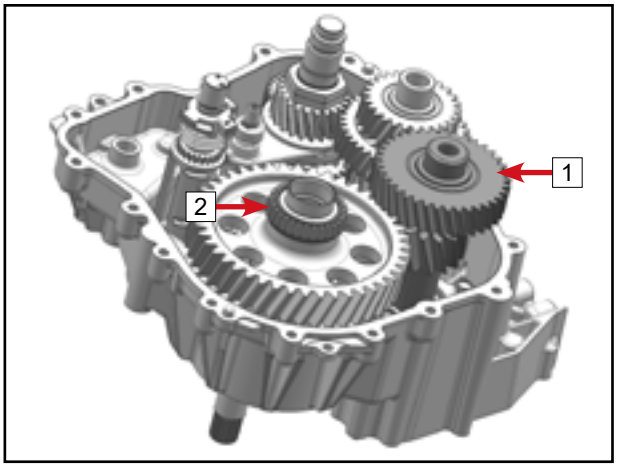

© CFMOTO Powersports, Inc. This manual is subject to all applicable copyright laws. Reproduction or duplication in any form, whole or in part, is strictly prohibited.

Remove adjusting washer [1].
Remove rear gear case gear [2].

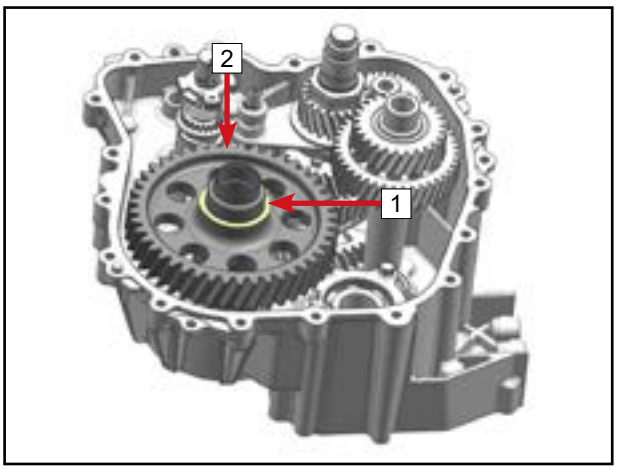

Remove intermediate shaft assembly [1].
Remove the inner ring [2] of the bearing.
Mark the inner ring [2] of the bearing in order to reinstall it back to its original position during reinstallation.

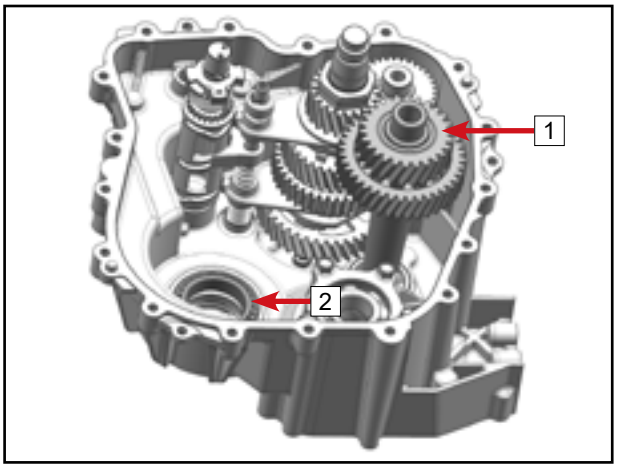

Remove reverse intermediate gear shaft [1].
Remove washer [2].
Remove reverse intermediate gear [3].
Remove needle bearing [4].
Remove washer [2].

NOTE
The washer [1] on top may adhere to RH gearbox, do not lose it during removal.

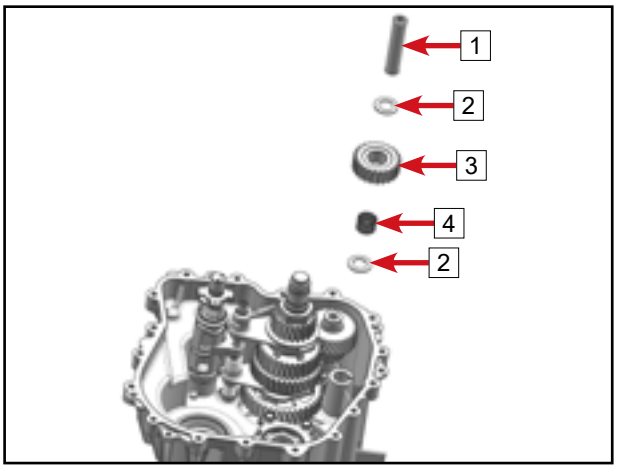

Remove main shaft assembly [1].

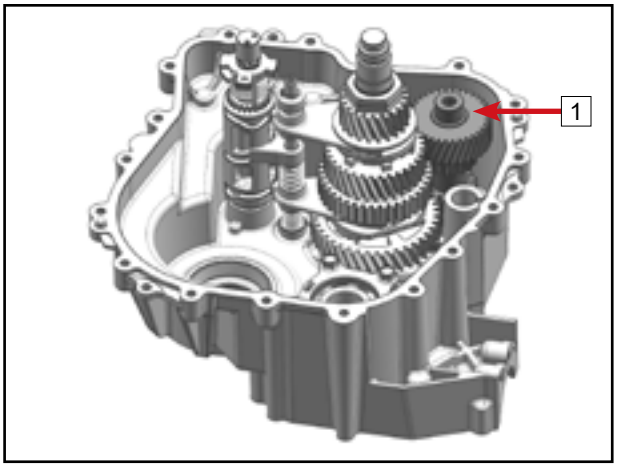

© CFMOTO Powersports, Inc. This manual is subject to all applicable copyright laws. Reproduction or duplication in any form, whole or in part, is strictly prohibited.

Remove the transmission shift drum 1, gearshift fork assembly 2, and countershaft assembly 3 together.

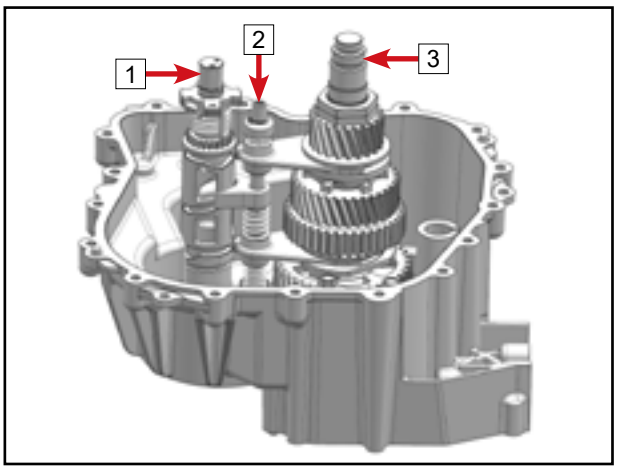

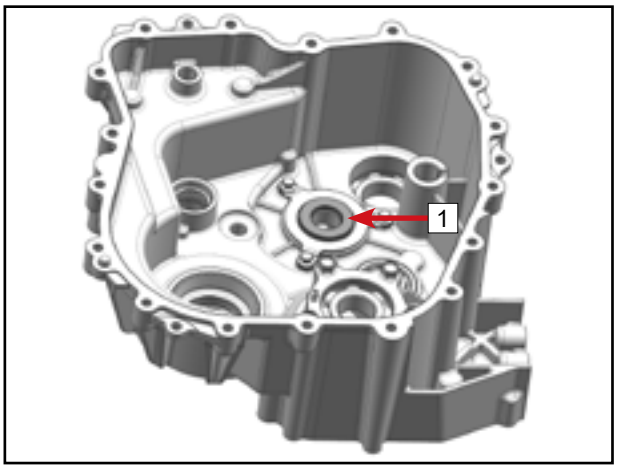

NOTE
The washer 1 at the bottom of the countershaft assembly usually adheres to LH gearbox, do not lose it during removal.

© CFMOTO Powersports, Inc. This manual is subject to all applicable copyright laws. Reproduction or duplication in any form, whole or in part, is strictly prohbited.

Gearshift Fork Assembly Disassembly

NOTE
Springs are not the same. Mark each spring for ease of reinstall.

NOTE
Pay attention to the direction of fork and spring seat of fork shaft.

Remove the following parts from the gearshift fork shaft 7. It is highly recommended to place the removed parts according to their original installation positions.

1 : Circlip
2: Spring seat
3: Center spring
4: Gearshift fork
5: Fork shaft spring seat
6: LH spring

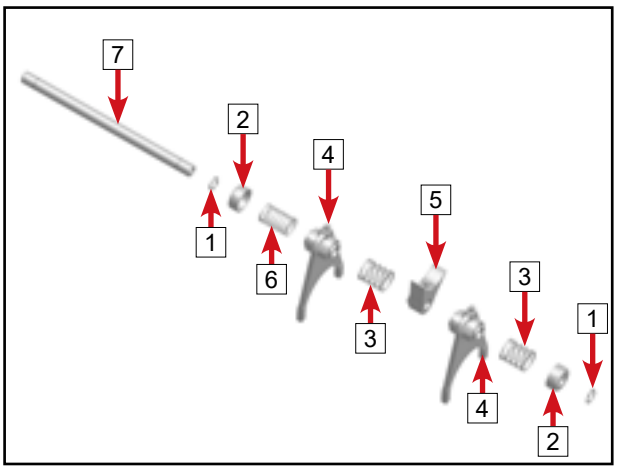

Countershaft Disassembly

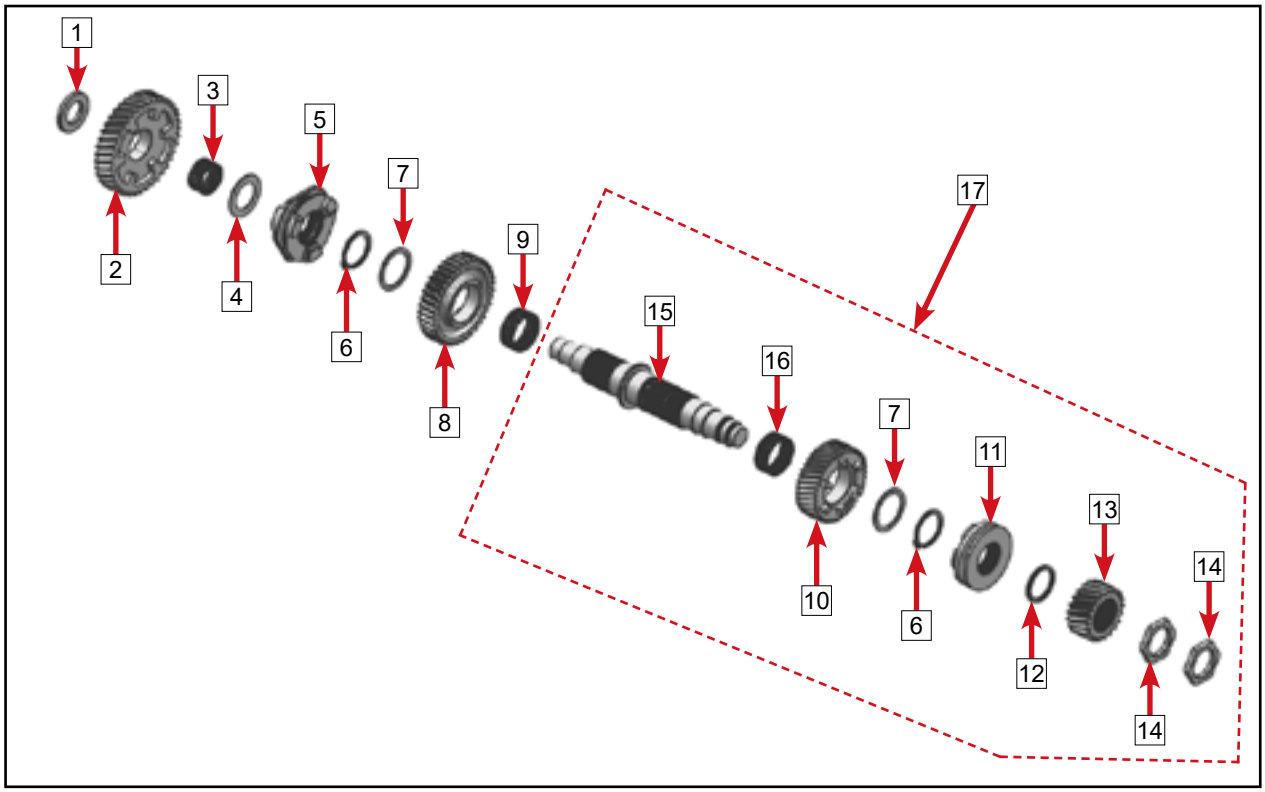

1	Countershaft washer 1	10	High driven gear
2	Low driven gear	11	H gearshift sliding sleeve
3	Low gear needle bearing	12	Half round gasket
4	Countershaft washer 2	13	Middle drive gear
5	LR gearshift sliding sleeve	14	Nut M34×1.5
6	Circlip 38	15	Countershaft
7	Countershaft washer 3	16	High gear needle bearing
8	Reverse driven gear	17	Countershaft component
9	Reverse gear needle bearing		

© CFMOTO Powersports, Inc. This manual is subject to all applicable copyright laws. Reproduction or duplication in any form, whole or in part, is strictly prohbited.

Remove the following parts from the countershaft component 17.
— Countershaft washer 1 1
— Low driven gear 2
— Low gear needle bearing 3
— Countershaft washer 2 4
— LR gearshift sliding sleeve 5
— Circlip 38 6
— Countershaft washer 3 7
— Reverse driven gear 8
— Reverse gear needle bearing 9

NOTE
Do not remove the M34x1.5 nuts 14 from the countershaft 17. Assembly of the M34x1.5 nuts 14 without specific factory equipment, tools and torque specifications may cause the nuts to loosen and cause transmission damage.

© CFMOTO Powersports, Inc. This manual is subject to all applicable copyright laws. Reproduction or duplication in any form, whole or in part, is strictly prohbited.

Driven Bevel Gear Shaft Assembly Disassembly

NOTE
Check before remove and remove as required.

NOTE
Washer 3 and washer 5 are different. Mark each washer for ease of reinstall.

Remove the following parts from the driven bevel gear shaft 6 in turn:
— Bearing 6206 1
— Nut M34×1.5×15 2 (left-hand thread)
— Driven bevel gear bearing washer 3
— Bearing 6207 4
— Driven bevel gear adjusting washer 5

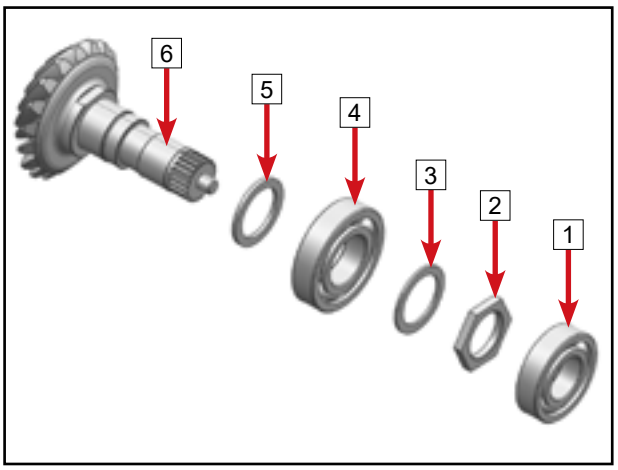

4.5.3.2 Parts Inspection

Gearbox Connecting Bracket and Output Spline Shaft

Inspect O-rings 1 for cracks, hardened or other damage. If damaged, replace.
Inspect the inner spline of the output spline sleeve 2 for excess wear or other damage. If damaged, replace.
Inspect the outer spline and bearing journal of output spline shaft 3 for excess wear or other damage. If damaged, replace.
Inspect if the rolling bearing 4 and rolling bearing 6 can rotate freely and smoothly.
Inspect the gearbox bracket 1 5 for cracks or other damage.

NOTE
The gearbox bracket 1 5, rolling bearing 4 and rolling bearing 6 are replaced as a whole.

For each maintenance, once the circlip 7 is removed, replace it with a new one. If the oil seal 8 becomes brittle, hard or damaged, replace it.

Inspect the gearbox bracket 2 9 for cracks or other damage. If damaged, replace.

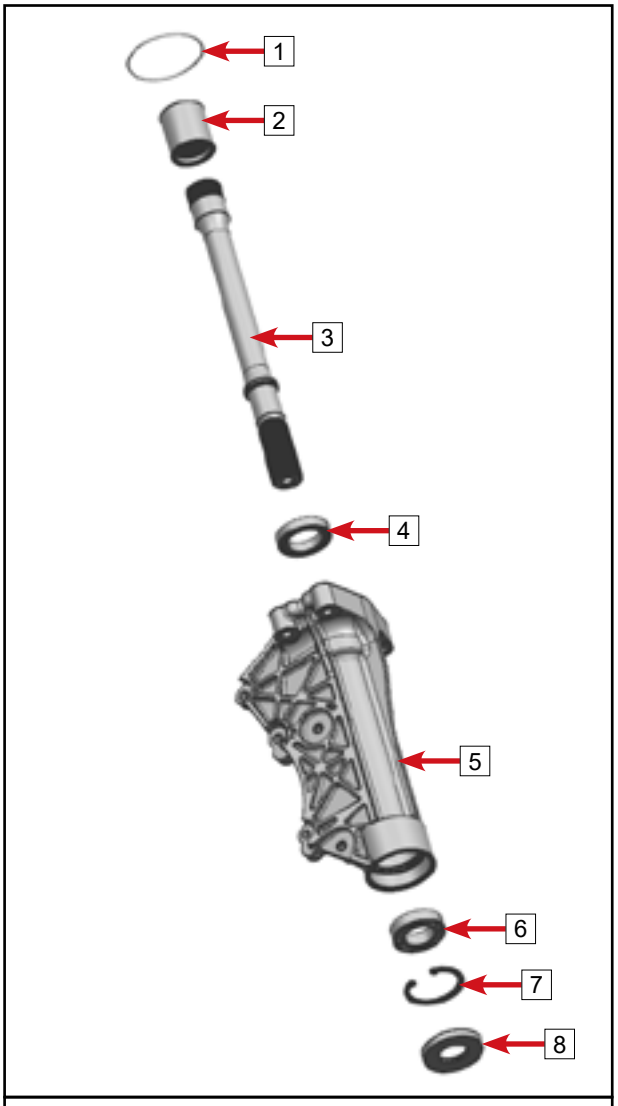

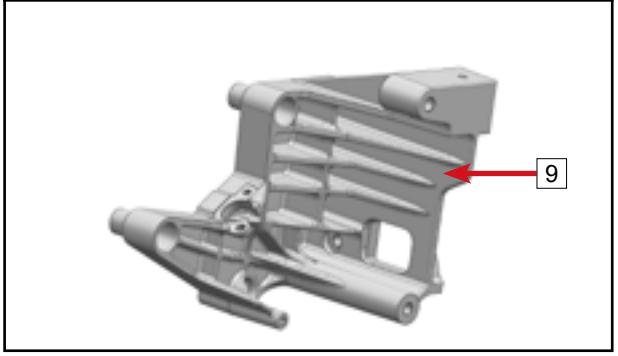

© CFMOTO Powersports, Inc. This manual is subject to all applicable copyright laws. Reproduction or duplication in any form, whole or in part, is strictly prohbited.

© CFMOTO Powersports, Inc. This manual is subject to all applicable copyright laws. Reproduction or duplication in any form, whole or in part, is strictly prohibited.

Gearbox Body

NOTE

Replace the LH gearbox and gearbox bevel gear cover in a complete set.

Inspect the gearbox 14 and 15 for cracks or other damage. If damaged, replace.

Inspect the bearing seat surface A on the LH gearbox for damage. Replace if necessary.

Inspect if the oil seal 11 and 12 becomes brittle, hard or damaged. If damaged, replace.

Inspect the bearings for dirt and/or metal chips. If required, clean it thoroughly.

Inspect if the bearings can rotate freely and smoothly. Replace if necessary.

Replace Bearings:

Heat the gearbox to 100 °C before removing the bearings if necessary.

⚠WARNING

Before heating, clean the oil inside and outside the box.

⚠WARNING

When removing bearings, be sure to support the box properly. If this procedure is not performed correctly, the box may be damaged.

Remove bolts 1 and/or 2, bearing press plate 9 and/or 10.

Use appropriate tools to remove bearings.

Remove blind hole bearings using a suitable puller.

NOTE

When installing bearings, the marked side of the bearing should face outward.

⚠CAUTION

Unless specified, do not use a hammer to install bearings. Only press fit.

Heat the gearbox to 100 °C before installing the bearings if necessary.

⚠WARNING

Before heating, clean the oil inside and outside the box.

Before installation, place the bearings in the freezer for 10 minutes.

Use appropriate tools to install new bearings.

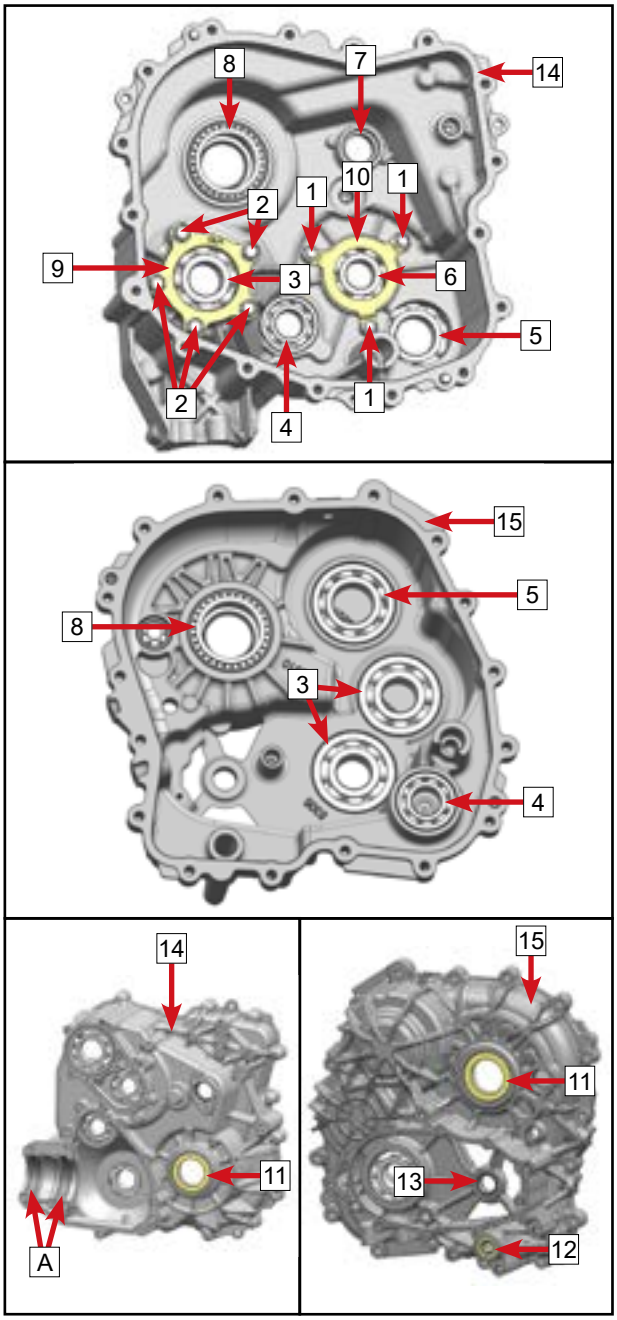

1	Bolt M6×16
2	Hex flange bolt M8×20
3	Bearing 6306
4	Bearing 6205
5	Bearing 6207
6	Bearing 6305
7	Needle bearing HK2512
8	Tapered roller bearing
9	Bearing press plate 1
10	Bearing press plate
11	Countershaft oil seal 40×58×8
12	Oil seal SD15×25×5
13	Needle bearing HK2010
14	LH gearbox
15	RH gearbox

When installing the bearing press plate 9, its "OUT" mark should face outward.
Apply 272 thread locker to the bearing press plate bolt 1 and 2.
(Before applying thread locker, clean the oil and other impurities on the internal/ external threads, and dry the threads.)

Bearing Press Plate Bolt Torque	
Bolt 1	14 N•m (10.3 ft-lb.)
Bolt 2	35 N•m (25.8 ft-lb.)

Bevel Gear and Bevel Gear Cover

NOTE
Replace the driven bevel gear shaft and drive bevel gear in pairs.

NOTE
If any part of drive bevel gear, driven bevel gear shaft, LH gearbox and gearbox bevel gear cover is replaced, proper adjusting washer need to be selected again. Refer to the section Transmission Bevel Gear Clearance Adjustment.

Inspect if the tooth surface and outer spline of the driven bevel gear shaft 6 are corroded, scratched, worn or damaged. Replace with new parts in case of abnormality.
Inspect the bearing journals of the driven bevel gear shaft 6 for excess wear. Replace if necessary.
Inspect if the rolling bearing 1 and 4 can rotate freely and smoothly. Replace if necessary.
Inspect the washer 3 and 5 for excess wear. If damaged, replace.

Inspect if the tooth surface and inner spline of drive bevel gear 7 are corroded, scratched, worn or damaged. Replace with new parts in case of abnormality.

Inspect the gearbox bevel gear cover 8 for cracks or other damage. If damaged, replace.
Inspect the bearing seat surface A on the bevel gear cover for damage. Replace the bevel gear cover if necessary.

NOTE
Replace the LH gearbox and gearbox bevel gear cover in a complete set.

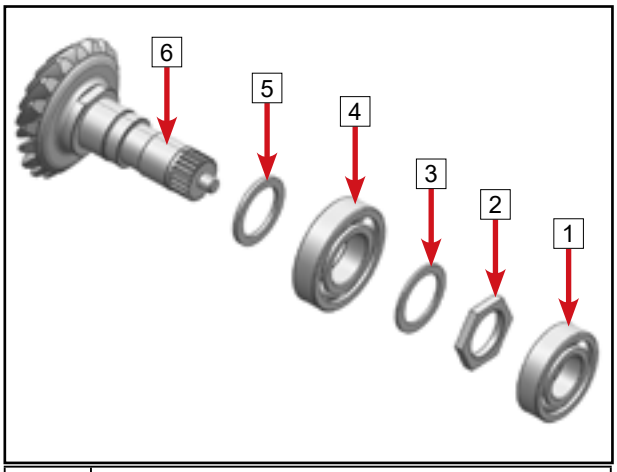

1	Bearing 6206
2	Nut M34×1.5
3	Driven bevel gear bearing washer
4	Bearing 6207
5	Driven bevel gear adjusting washer
6	Driven bevel gear shaft

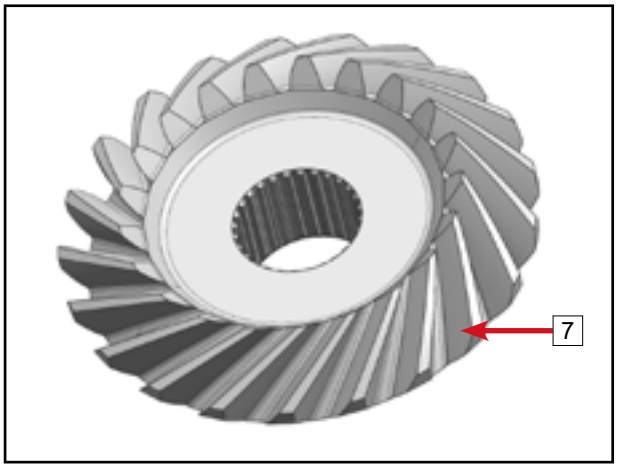

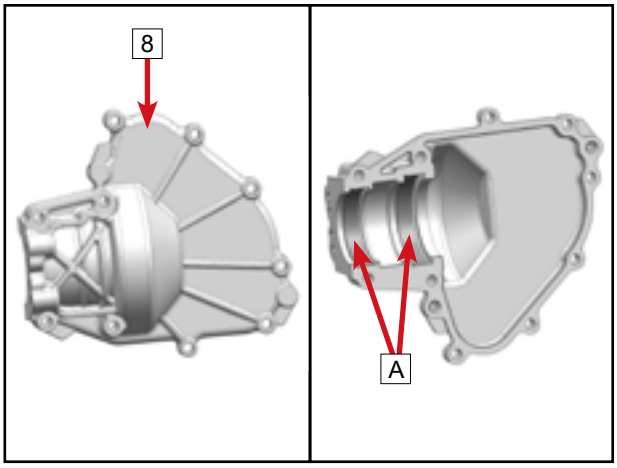

© CFMOTO Powersports, Inc. This manual is subject to all applicable copyright laws. Reproduction or duplication in any form, whole or in part, is strictly prohibited.

Gearbox Input Shaft Cover and Gearshift Cover

Check the gearbox input shaft cover [1] for cracks or other damage. If damaged, replace.

If the oil seal [2] becomes brittle, hard or damaged, replace it.

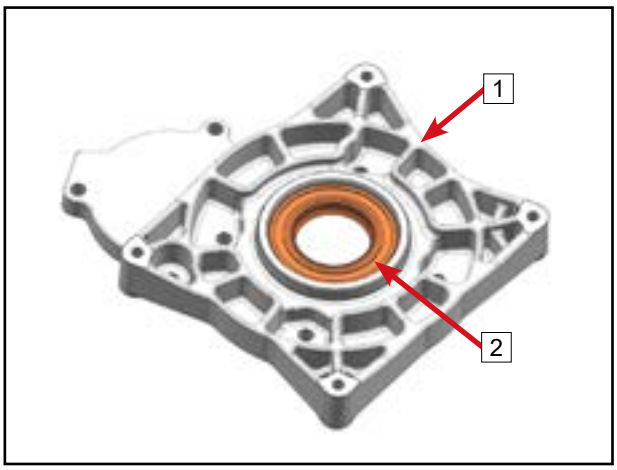

Check the gearbox gearshift cover [1] for cracks or other damage. If damaged, replace.

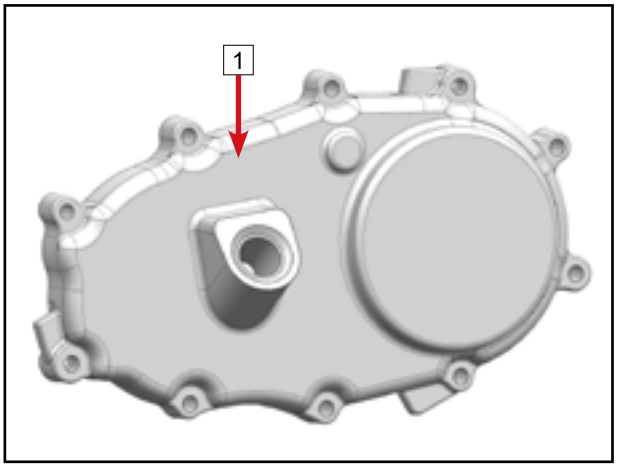

Parking Swing Arm, Shaft and Gear

Inspect if the parking swing arm [1] is crack, excess wear or damage. If damaged, replace.

Inspect parking gear [3] teeth and inner splines for excess wear or damage. If damaged, replace.

Inspect the parking swing arm shaft [2] for excess wear. If damaged, replace.

Parking Swing Arm Shaft Outer Diameter [A]	
New	11.966 ~ 11.984 mm (0.47110 ~ 0.47181 in.)
Service Limit	11.960 mm (0.47087 in.)

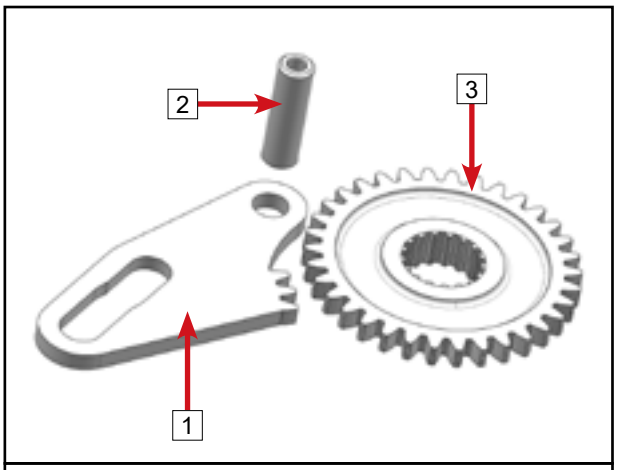

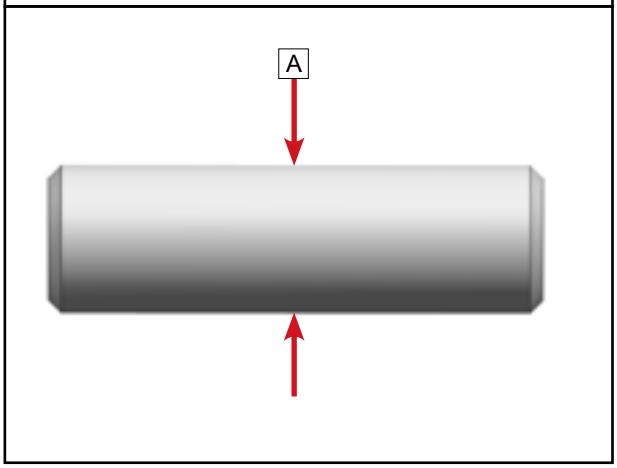

© CFMOTO Powersports, Inc. This manual is subject to all applicable copyright laws. Reproduction or duplication in any form, whole or in part, is strictly prohibited.

Output Shaft Assembly

Inspect gear and outer splines for excess wear or damage.

Check bearing journals for excess wear.

Bearing Journal Outer Diameter A	
New	34.975 ~ 34.991 mm (1.37697 ~ 1.37760 in.)
Service Limit	34.965 mm (1.37657 in.)
Bearing Journal Outer Diameter B	
New	29.980 ~ 29.993 mm (1.18031 ~ 1.18083 in.)
Service Limit	29.970 mm (1.17992 in.)

If excess wear or damage occurs in any position, replace the output shaft assembly with a new one.

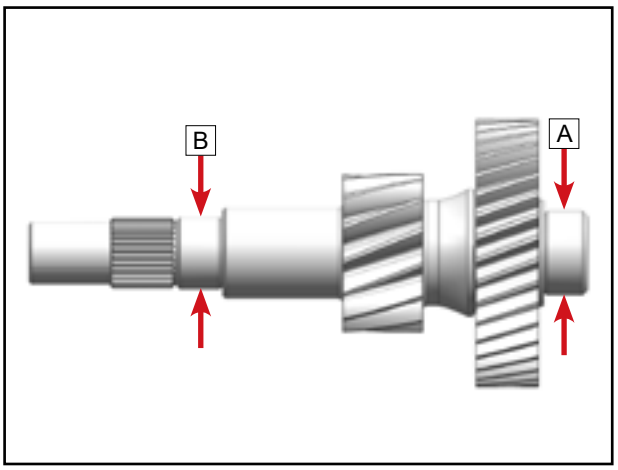

Intermediate Shaft Assembly

Inspect gear for excess wear or damage.

Inspect bearing journals for excess wear.

Bearing Journal Outer Diameter A	
New	29.980 ~ 29.993 mm (1.18031 ~ 1.18083 in.)
Service Limit	29.970 mm (1.17992 in.)
Bearing Journal Outer Diameter B	
New	24.980 ~ 24.993 mm (0.98346 ~ 0.98398 in.)
Service Limit	24.970 mm (0.98307 in.)

If excess wear or damage occurs in any position, replace the intermediate shaft assembly with a new one.

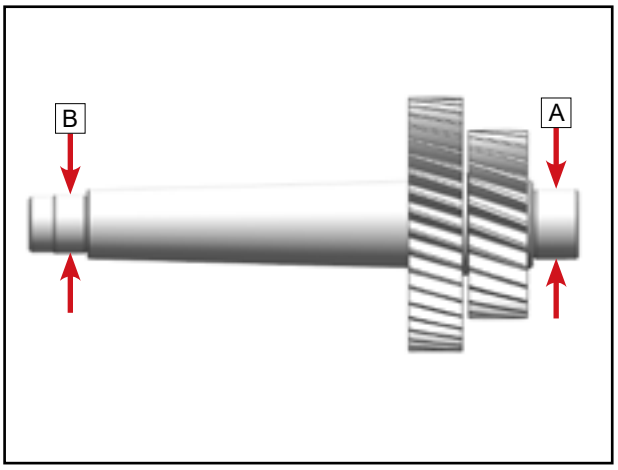

© CFMOTO Powersports, Inc. This manual is subject to all applicable copyright laws. Reproduction or duplication in any form, whole or in part, is strictly prohibited.

Main Shaft Assembly (TMT)

Inspect gear and outer splines for excess wear or damage.

Inspect bearing journals for excess wear.

Bearing Journal Outer Diameter [A]	
New	24.980 ~ 24.993 mm (0.98346 ~ 0.98398 in.)
Service Limit	24.970 mm (0.98307 in.)
Bearing Journal Outer Diameter [B]	
New	34.975 ~ 34.991 mm (1.37697 ~ 1.37760 in.)
Service Limit	34.965 mm (1.37657 in.)

If excess wear or damage occurs in any position, replace the main shaft assembly with a new one.

NOTE
There is (two circle) mark grooves [C] on the high gear driving gear [1].

TMT

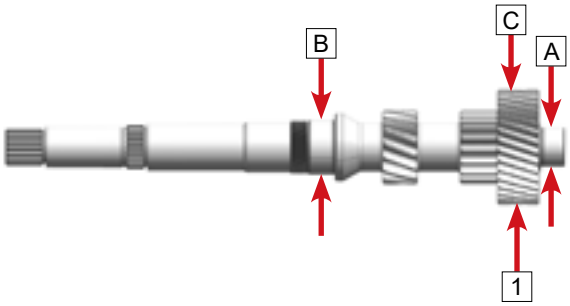

Rear Gear Case Gear

Check gear and internal splines for excessive wear or damage.

Check bearing journals for excessive wear.

Bearing Journal Outside Diameter [A]	
New	49.975 ~ 49.991 mm (1.96752 ~ 1.96815 in.)
Service Limit	49.965 mm (1.96713 in.)

If excessive wear or damage occurs in any location, replace the rear gear case gear.

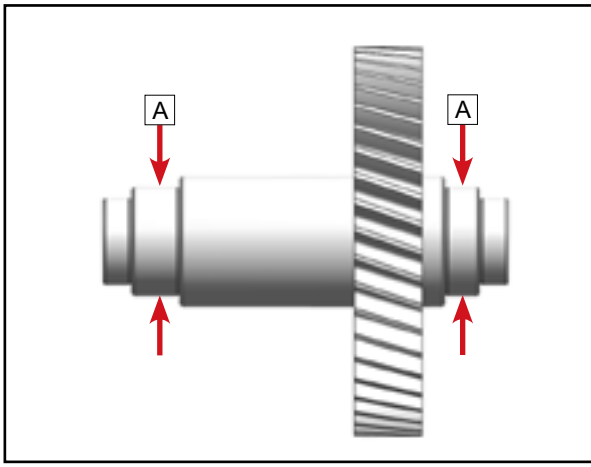

© CFMOTO Powersports, Inc. This manual is subject to all applicable copyright laws. Reproduction or duplication in any form, whole or in part, is strictly prohibited.

Reverse Intermediate Gear and Shaft

Inspect washers 1 and needle bearing 3 for excess wear or damage. If damaged, replace.

Inspcet reverse intermediate gear 2 for excess wear or damage.

Reverse Intermediate Gear Inner Diameter A	
New	26 ~ 26.021 mm (1.02362 ~ 1.02445 in.)
Service Limit	26.025 mm (1.02461 in.)

If excess wear or damage occurs in any position, replace the gear with a new one.

Inspect reverse intermediate gear shaft 4 for excess wear. If damaged, replace a new shaft.

Reverse Intermediate Gear Shaft Outer Diameter B	
New	19.972 ~ 19.993 mm (0.78630 ~ 0.78713 in.)
Service Limit	19.965 mm (0.78602 in.)

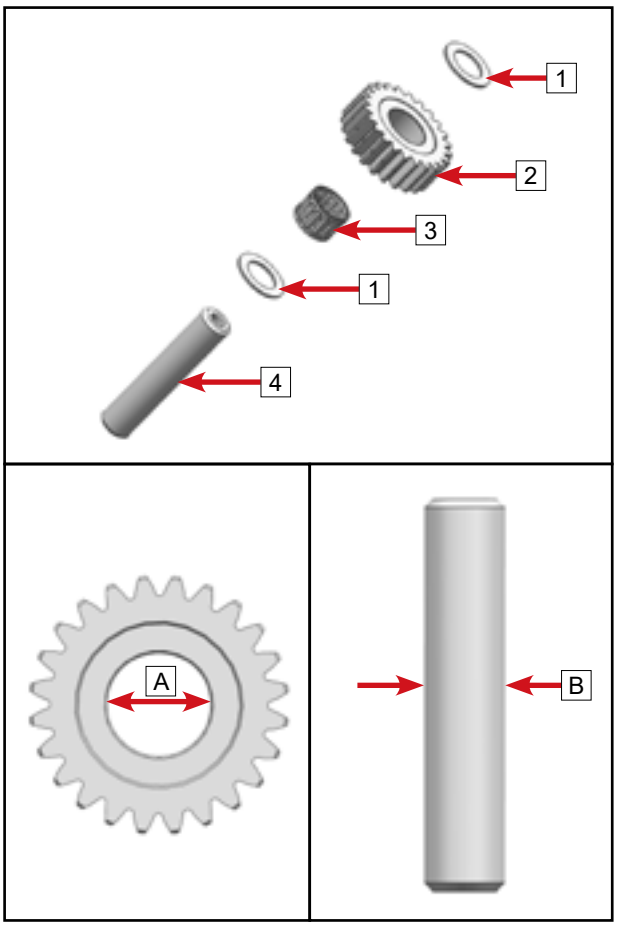

Shift Fork Shaft, Shift Fork and Fork Shaft Spring Seat

Inspect shift fork shaft for excess wear or damage.

Place shift fork shaft on a level surface and roll it. Replace if bent or damaged.

⚠CAUTION
Do not try to correct a bent shift fork shaft.

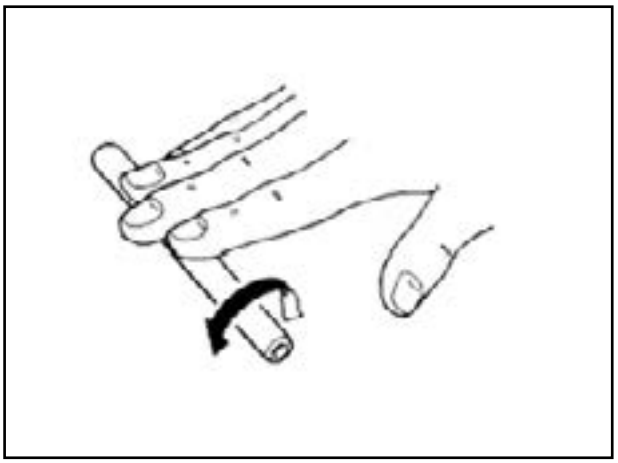

© CFMOTO Powersports, Inc. This manual is subject to all applicable copyright laws. Reproduction or duplication in any form, whole or in part, is strictly prohbited.

Inspect two shift forks for excess wear or damage, and whether the fork claws are bent.
Measure the thickness [1] of the fork claw. If the service limit is exceeded, replace it.

Fork Claw Thickness [1]	
New	5.93 ~ 6.00 mm (0.23346 ~ 0.23622 in.)
Service Limit	5.83 mm (0.22953 in.)

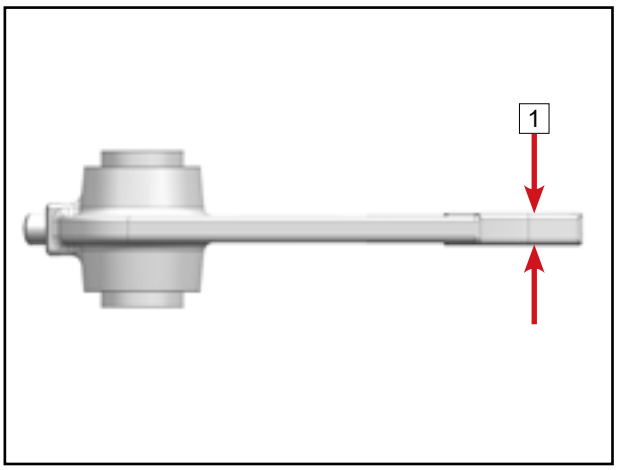

Measure shift fork pin diameter [1]. Replace if beyond service limit.

Shift Fork Pin Diameter [1]	
New	5.952 ~ 6.000 mm (0.23433 ~ 0.23622 in.)
Service Limit	5.88 mm (0.23150 in.)

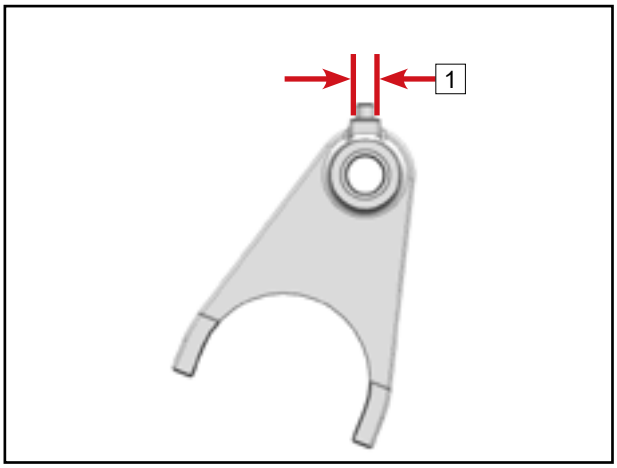

Place each fork on the fork shaft, move it left and right. If not smooth, replace with new parts.

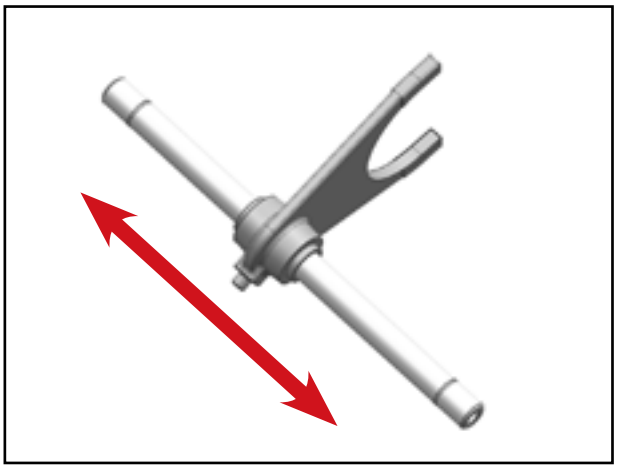

Inspect fork shaft spring seat [1] for excess wear or damage.
Measure the diameter [A] of the guide pin. If the service limit is exceeded, replace it.

Guide Pin Diameter [A]	
New	5.95 mm ~ 6.00 mm (0.23425 ~ 0.23622 in.)
Service Limit	5.88 mm (0.23150 in.)

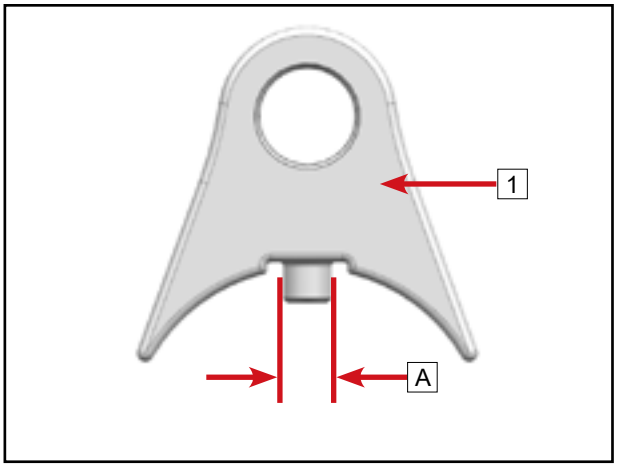

© CFMOTO Powersports, Inc. This manual is subject to all applicable copyright laws. Reproduction or duplication in any form, whole or in part, is strictly prohibited.

Place fork shaft spring seat on the fork shaft, move it left and right. If not smooth, replace with new parts.

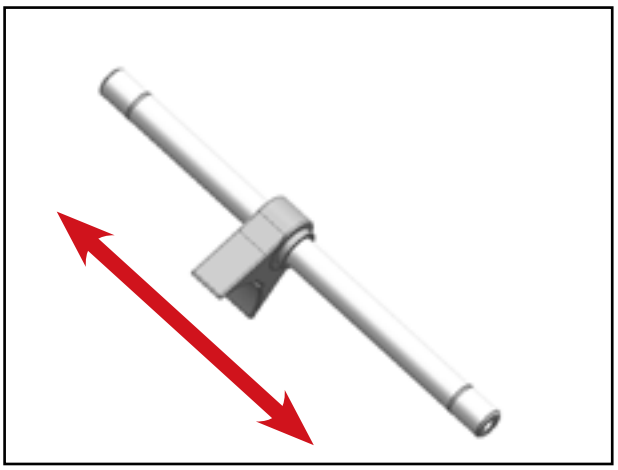

Shift Fork Spring

Inspect shift fork spring for breaks, cracks or other damage. Replace if damaged.

1: Center spring, free length 36.6 mm (new part)

2: LH spring, free length 54 mm (new part)

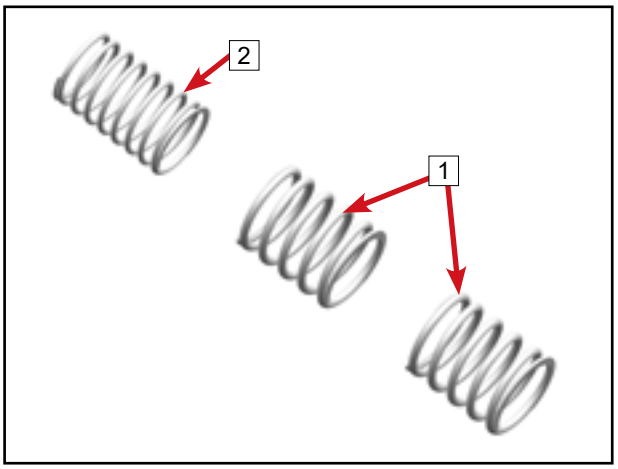

Transmission Shift Drum Assembly

NOTE
Do not disassemble the transmission shift drum assembly.

Inspect transmission shift drum 1 for excess wear or damage (especially the guide rail A).

Check the shift driven sector gear 2 for excessive wear or damage.

Check torsion spring 3 for severe distortion or damage.

Check bushing 4 for excessive wear or damage.

Check shift drive plate 5 for excessive wear or damage.

Check shift driven plate 6 for excessive wear or damage.

If any of the above parts show excessive wear or damage, replace the entire shift drum assembly.

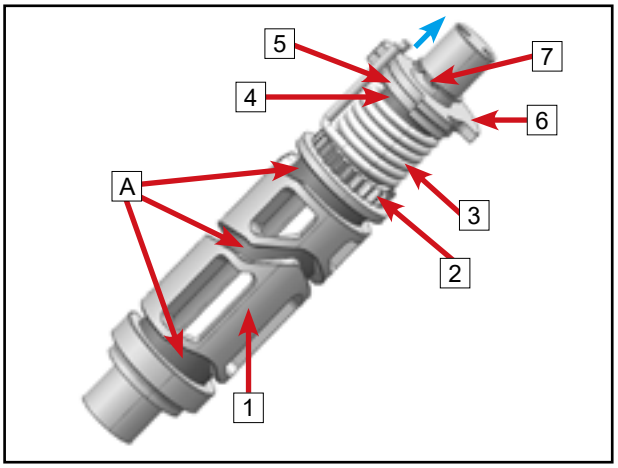

Use a new circlip 7 for each repair.

When installing the circlip 7, the side with round corner faces the direction pointed by the arrow in the image.

© CFMOTO Powersports, Inc. This manual is subject to all applicable copyright laws. Reproduction or duplication in any form, whole or in part, is strictly prohibited.

Shift Sector Gear Assembly

Inspect the shift sector gear assembly [1] for excessive wear or damage. If damaged, replace with a new part.
Use a new circlip [2] for each service.
Install the circlip [2] with the rounded side facing the direction indicated by the arrow in the image.

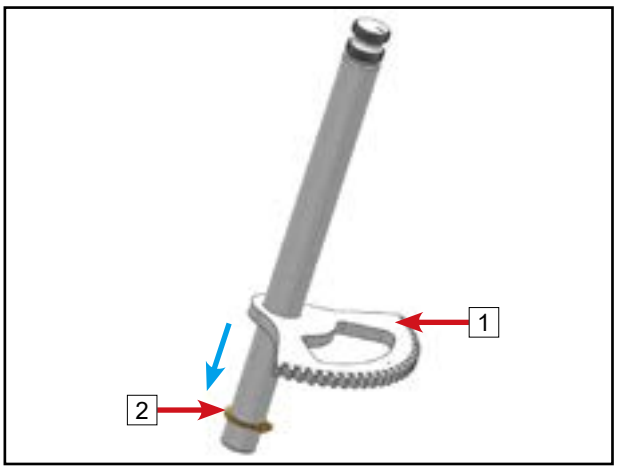

Positioning Cam

Check for cracked or damaged positioning cam. If damaged, replace.
Check positioning tooth [1] and cylindrical surfaces [2] for excessive wear. Replace the positioning cam if necessary.

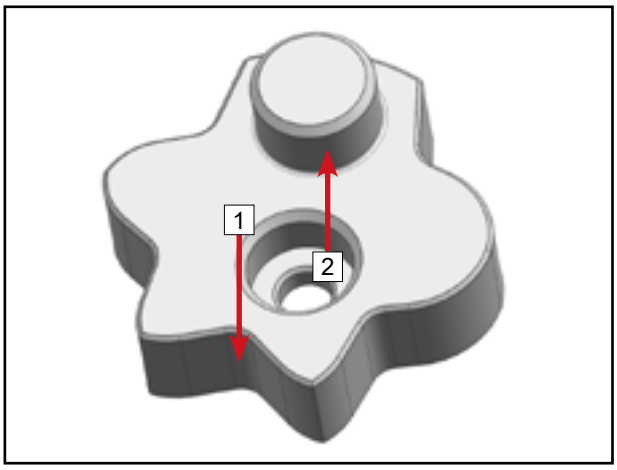

Shift Positioning Swing Arm Assembly

Inspect bushing [1] and washer [4] for excessive wear or other damage. If necessary, replace.
Check torsion spring [5] for severe distortion, wear or other damage. If necessary, replace.
Inspect the shift positioning swing arm [2] for bending and distortion. If damaged, replace with new shift positioning swing arm sub-assembly.
Check that the bearing [3] rotates flexibly. If stuck, replace with new shift positioning swing arm sub-assembly.

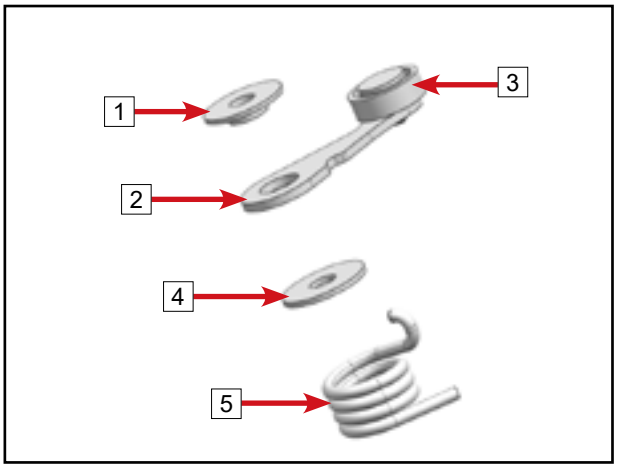

© CFMOTO Powersports, Inc. This manual is subject to all applicable copyright laws. Reproduction or duplication in any form, whole or in part, is strictly prohibited.

Countershaft Assembly

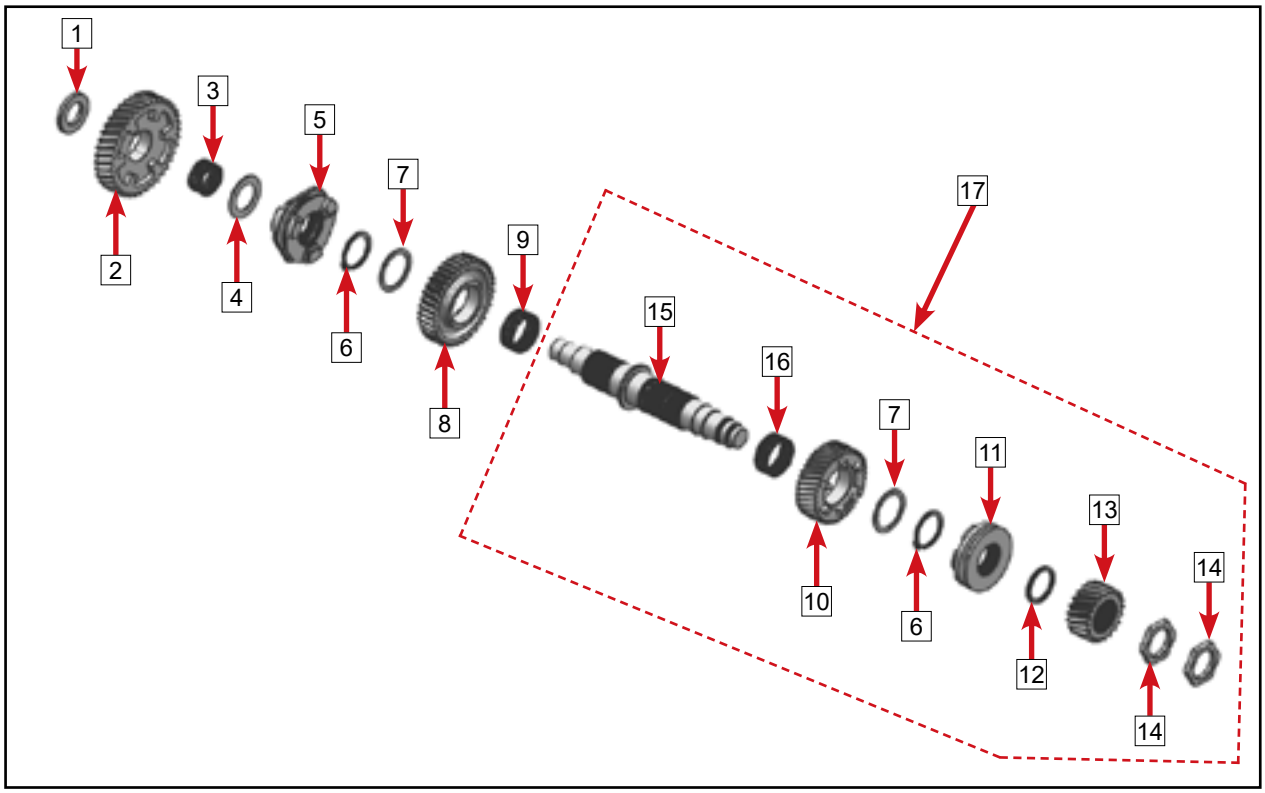

1	Countershaft washer 1	10	High driven gear
2	Low driven gear	11	H gear gearshift sliding sleeve
3	Low gear needle bearing	12	Half round gasket
4	Countershaft washer 2	13	Intermediate drive gear
5	LR gearshift sliding sleeve	14	Nut M34×1.5
6	Circlip 38	15	Countershaft
7	Countershaft washer 3	16	High gear needle bearing
8	Reverse driven gear	17	Countershaft component
9	Reverse gear needle bearing		

Inspect needle bearings 3 and 9 for excess wear or damage. If damaged, replace the needle bearing.
Inspect the inner spline of the gearshift sliding sleeve 5 for excess wear or damage. If damaged, replace the parts in pairs.
Inspect the gearshift engaging pawls of the gearshift sliding sleeve 5 for excess wear or damage. If damaged, replace the parts in pairs.
Inspect the tooth surface of the gears 2 and 8 for excess wear or damage. If damaged, replace the gears in pairs.
Inspect the gearshift engaging grooves of the gears 2 and 8 for excess wear or damage. If damaged, replace the gears in pairs.
Inspect if the gearshift sliding sleeve 5 can slide freely and smoothly on the countershaft 15. In case of clamping stagnation, replace the gearshift sliding sleeve 5 or the countershaft component 17.

Inspect washers 1 4 for excess wear or damage. If damaged, replace the washer.
Use new circlips 6 for each repair.

© CFMOTO Powersports, Inc. This manual is subject to all applicable copyright laws. Reproduction or duplication in any form, whole or in part, is strictly prohibited.

Check whether the countershaft component 17 has the following conditions:
— Excessive wear or damage to the bearing journal and external splines of the countershaft 15.
— Excessive wear or damage on the tooth surface of the gear 10 and 13.
— Excessive wear or damage to the shift engaging pawl of the gear 10.
— Excessive wear or damage to the gearshift engaging pawl or groove of the gearshift sliding sleeve 11.
— Sticks when the gearshift sliding sleeve 11 slids on the countershaft 15.
— Excessive wear or damage to the needle bearing 16.

If any abnormality is found, replace the countershaft component 17.

NOTE
Do not remove the M34x1.5 nuts 14 from the countershaft 17. Assembly of the M34x1.5 nuts 14 without specific factory equipment, tools and torque specifications may cause the nuts to loosen and cause transmission damage.

© CFMOTO Powersports, Inc. This manual is subject to all applicable copyright laws. Reproduction or duplication in any form, whole or in part, is strictly prohbited.

The typical example is as shown on the right.
1, 2: Gearshift sliding sleeve
A: Gearshift engaging pawl
B: Gearshift engaging groove

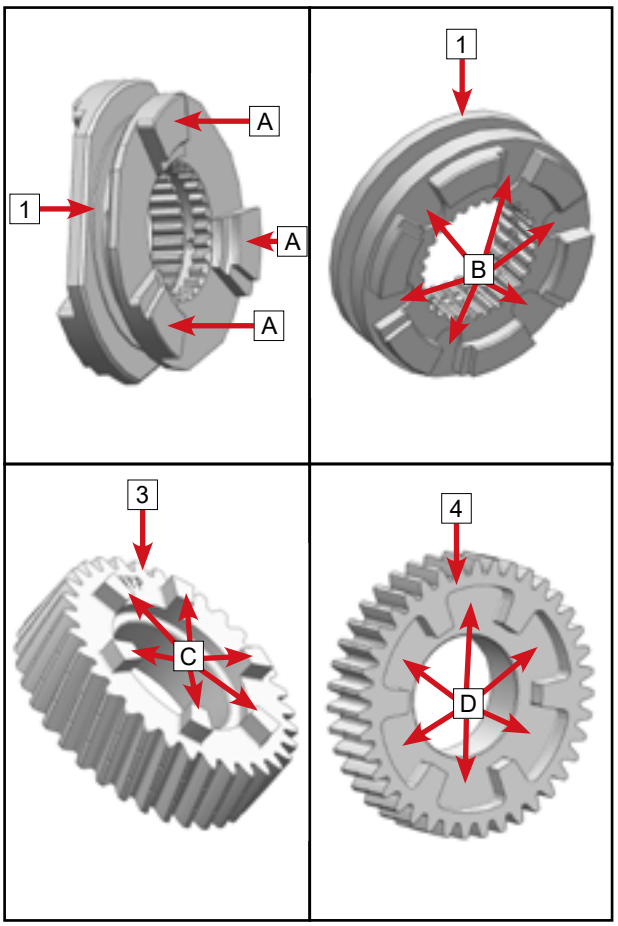

3, 4: Gearshift gear
C: Gearshift engaging pawl
D: Gearshift engaging groove

Measure the width of groove on the gearshift sliding sleeve matching with the fork. Replace if beyond service limit.
The fork slots of the LR gearshift sliding sleeve and the H gear gearshift sliding sleeve are the same in width.

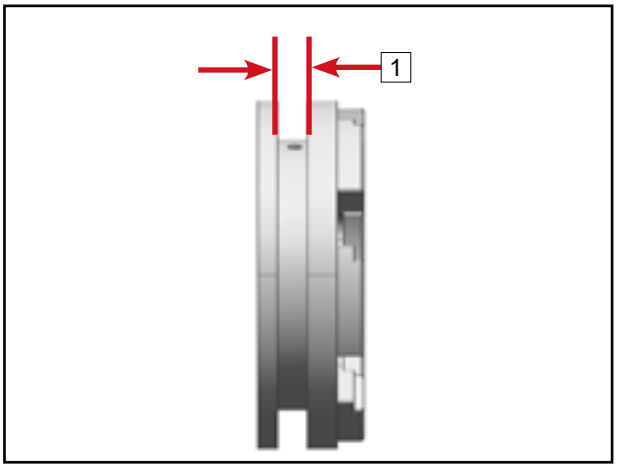

Fork Slot Width 1	
New	6.1 ~ 6.2 mm (0.24016 ~ 0.24409 in.)
Service Limit	6.3 mm (0.24803 in.)

Measure the low driven gear inner diameter 1. Replace if beyond service limit .

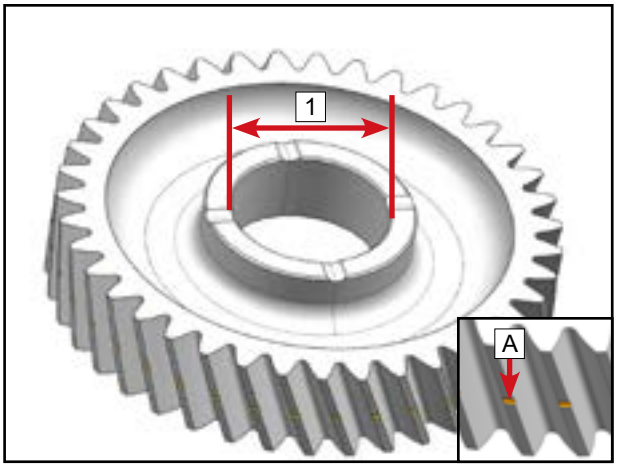

Low Driven Gear Inner Diameter 1	
New	35 ~ 35.016 mm (1.37795 ~ 1.37858 in.)
Service Limit	35.020 mm (1.37874 in.)

NOTE
There is (one circle) mark groove A on the Low Driven Gear.

© CFMOTO Powersports, Inc. This manual is subject to all applicable copyright laws. Reproduction or duplication in any form, whole or in part, is strictly prohibited.

Measure the reverse driven gear inner diameter 1. Replace if beyond service limit.

Reverse Driven Gear Inner Diameter 1	
New	43.009 ~ 43.025 mm (1.69327 ~ 1.69390 in.)
Service Limit	43.030 mm (1.69409 in.)

NOTE
There is (one circle) mark groove A on the Reverse Driven Gear.

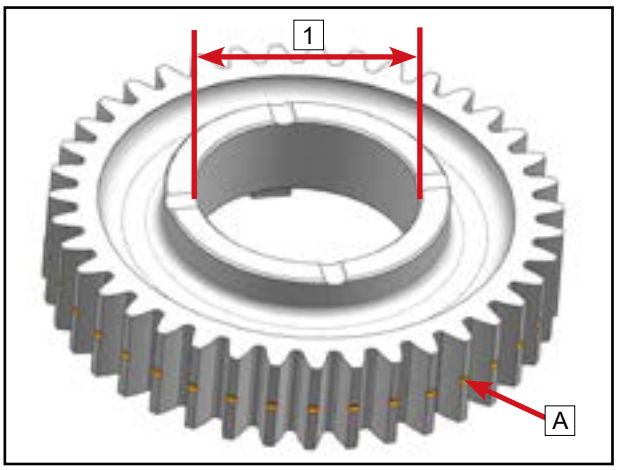

Measure the high driven gear (TMT) inner diameter 1. Replace if beyond service limit.

High Driven Gear Inner Diameter 1	
New	43.009 ~ 43.025 mm (1.69327 ~ 1.69390 in.)
Service Limit	43.030 mm (1.69409 in.)

NOTE
There is no mark groove on the High Driven Gear.

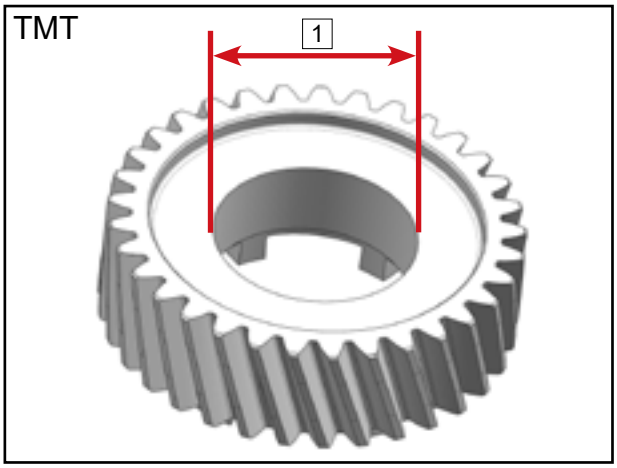

Measure the outer diameter of countershaft bearing journal. Replace if beyond service limit.

Countershaft Bearing Journal	
Outer Diameter 1	
New	24.980 ~ 24.993 mm (0.98346 ~ 0.98398 in.)
Service Limit	24.974 mm (0.98323 in.)
Outer Diameter 2	
New	29.987 ~ 30.000 mm (1.18060 ~ 1.18110 in.)
Service Limit	29.981 mm (1.18035 in.)
Outer Diameter 3	
New	37.984 ~ 38.000 mm (1.49543 ~ 1.49606 in.)
Service Limit	37.978 mm (1.49520 in.)
Outer Diameter 4	
New	29.980 ~ 29.993 mm (1.18031 ~ 1.18083 in.)
Service Limit	29.974 mm (1.18008 in.)

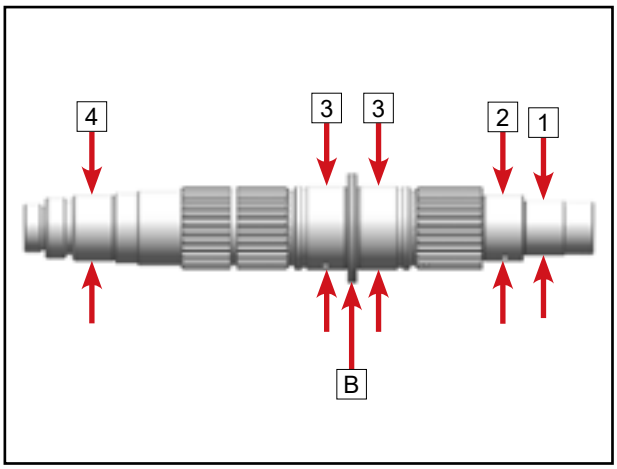

B: Identification slot

© CFMOTO Powersports, Inc. This manual is subject to all applicable copyright laws. Reproduction or duplication in any form, whole or in part, is strictly prohibited.

4.5.3.3 Reassembly
Countershaft Reassembly

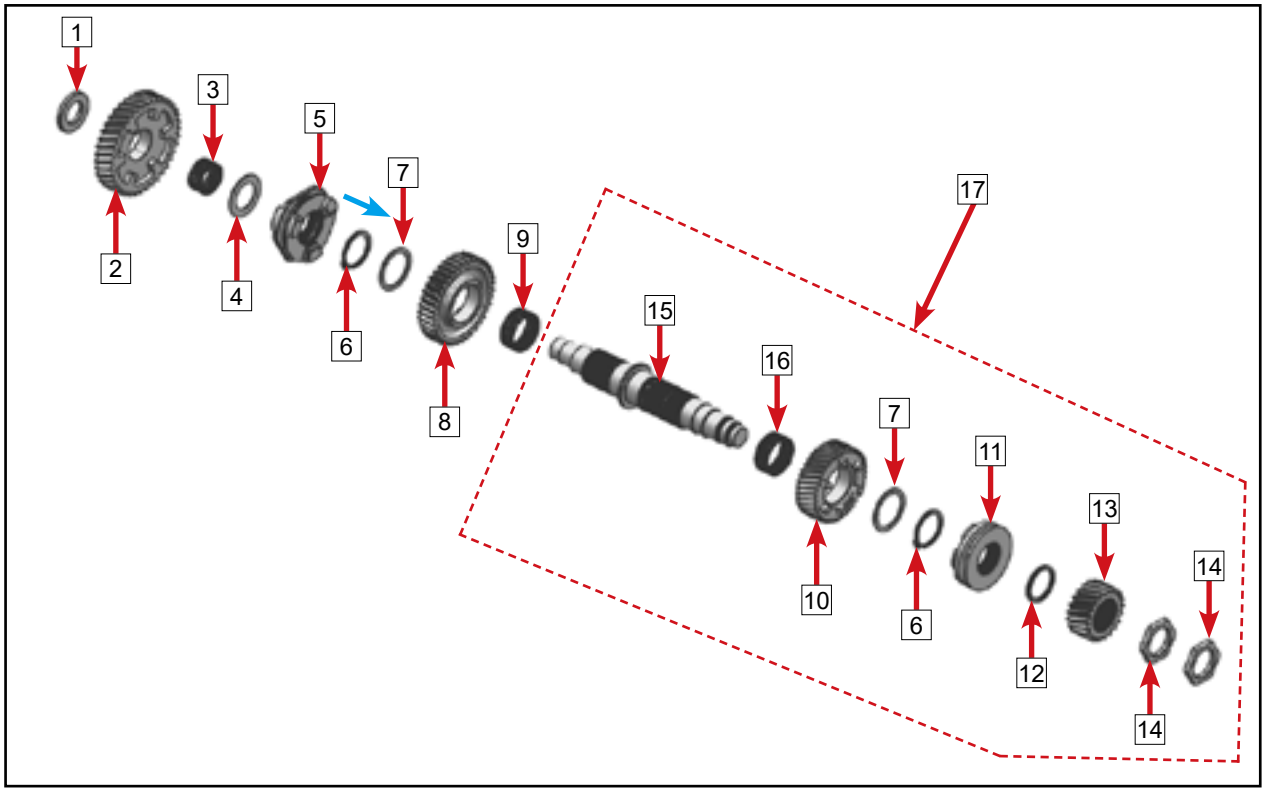

1	Countershaft washer 1	10	High driven gear
2	Low driven gear	11	H gear gearshift sliding sleeve
3	Low gear needle bearing	12	Half round gasket
4	Countershaft washer 2	13	Intermediate drive gear
5	LR gearshift sliding sleeve	14	Nut M34×1.5
6	Circlip 38	15	Countershaft
7	Countershaft washer 3	16	High gear needle bearing
8	Reverse driven gear	17	Countershaft component
9	Reverse gear needle bearing		

NOTE
Removed circlips cannot be used again. Replace with a new one. When installing, the rounded edge of the circlip faces the direction pointed by the arrow in the image. Ensure it is fully installed in groove.

Clean and lubricate all parts thoroughly before assembly.
Install the following parts on the countershaft component 17 in turn.
— Reverse gear needle bearing 9
— Reverse driven gear 8
— Countershaft washer 3 7
— New circlip 38 6
— LR gearshift sliding sleeve 5
— Countershaft washer 2 4
— Low gear needle bearing 3
— Low driven gear 2
— Countershaft washer 1 1
Finally check the smoothness of motion of all gears.

© CFMOTO Powersports, Inc. This manual is subject to all applicable copyright laws. Reproduction or duplication in any form, whole or in part, is strictly prohibited.

Gearshift Fork Reassembly

NOTE
Springs are not the same. Pay attention to the orientation details.

NOTE
Removed circlips cannot be used again. Replace with a new one. When installing, the rounded edge of the circlip faces the direction pointed by the arrow in the image. Ensure that it is fully installed in groove.

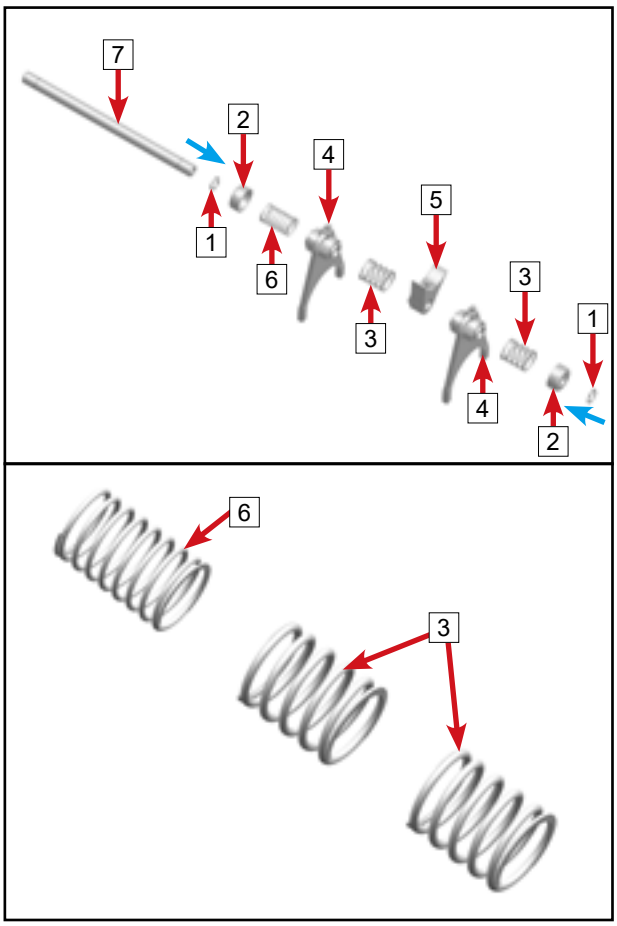

Install the following parts on the gearshift fork shaft 7 in turn.
— New circlip 1
— Spring seat 2
— LH spring 6
— Gearshift fork 4
— Centering spring 3
— Fork shaft spring seat 5
— Gearshift fork 4
— Centering spring 3
— Spring seat 2
— New circlip 1

The following is for reference when installing springs.
Centering Spring Free Length 3**:** 36.6 mm (new part)
LH Spring Free Length 6**:** 54 mm (new part)

© CFMOTO Powersports, Inc. This manual is subject to all applicable copyright laws. Reproduction or duplication in any form, whole or in part, is strictly prohbited.

Driven Bevel Gear Shaft Reassembly

NOTE
Washer 3 and washer 5 are different. Do not assemble them incorrectly.

NOTE
If any part of drive bevel gear, driven bevel gear shaft, LH gearbox and gearbox bevel gear cover is replaced, it is required to select proper adjusting washer again. Refer to the Transmission Bevel Gear Clearance Adjustment section.

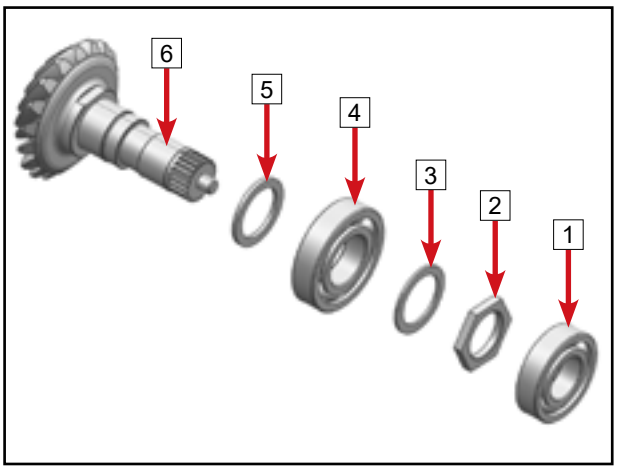

Install the following parts on the driven bevel gear shaft 6 in order.

— Driven bevel gear adjusting washer 5
— Bearing 6207 4
— Driven bevel gear bearing washer 3
— Nut M34×1.5×15 2 (left-hand thread), apply 272 thread locker (Before applying thread locker, clean the oil and other impurities on the inner/outer threads and dry the threads.)

Nut M34×1.5×15 2 (left-hand thread)	
Torque	200 N•m (147.5 ft-lb.)

— Bearing 6206 1

© CFMOTO Powersports, Inc. This manual is subject to all applicable copyright laws. Reproduction or duplication in any form, whole or in part, is strictly prohbited.

© CFMOTO Powersports, Inc. This manual is subject to all applicable copyright laws. Reproduction or duplication in any form, whole or in part, is strictly prohbited.

Gearbox Reassembly

NOTE
Before assembly, thoroughly clean all parts, check and ensure all parts are no wrong or missing.

NOTE
Before assembly, carefully lubricate each bearing journal, bearing and gear.

If new parts are installed, verify that axial clearance of rear gear case gear meets the requirement before full assembly of the gearbox (Refer to Section 4.5.4).

If new parts are installed, verify that bevel gear backlash and tooth surface contact meets the requirement before full assembly of the gearbox (Refer to Section 4.5.5).

Place the LH gearbox on the bench.

Assemble the transmission shift drum [1], gearshift fork assembly [2] and countershaft assembly [3] together, insert the shift fork claw of the shift fork into the groove of the corresponding shift sliding sleeve, and clamp the guide pin of the shift fork into the corresponding groove of the transmission shift drum.

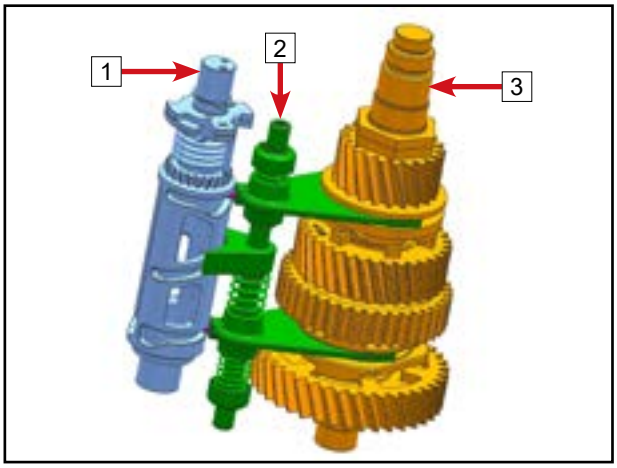

Install the transmission shift drum [1], gearshift fork assembly [2] and countershaft assembly [3] on the LH gearbox at the same time.

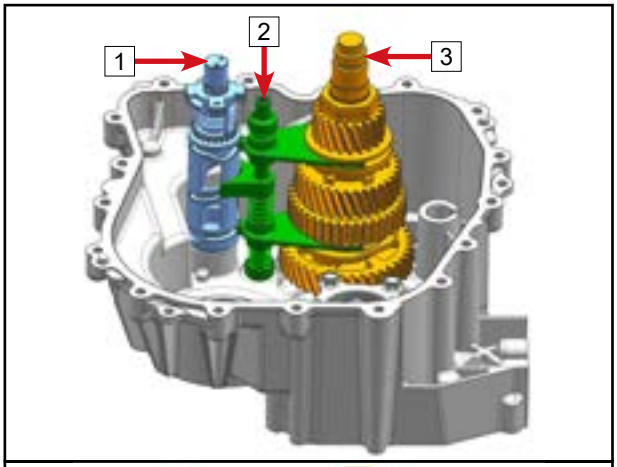

NOTE
Do not lose the washer [4] at the bottom of the countershaft assembly during installation.

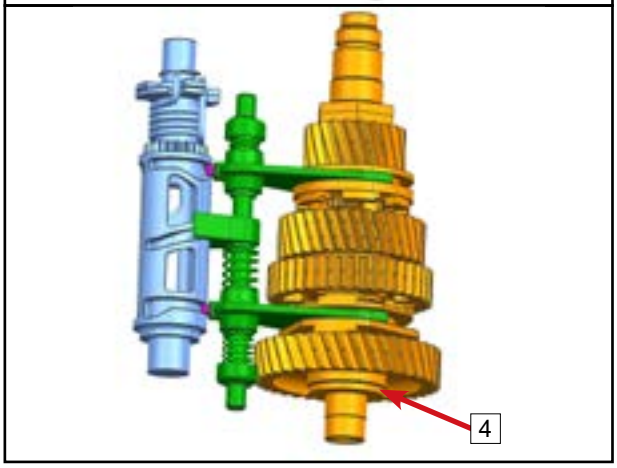

Install main shaft assembly 1.

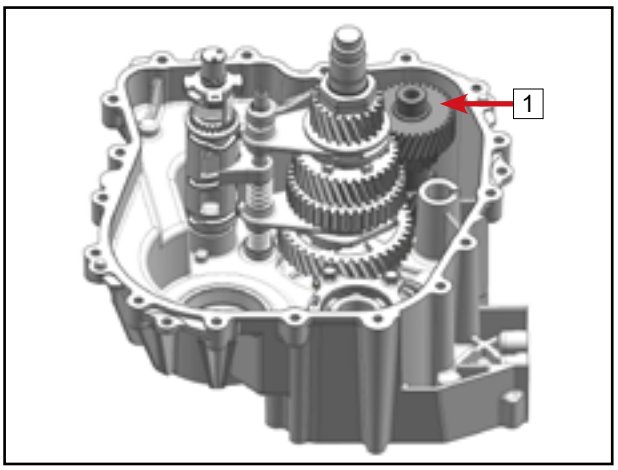

Install the washer 1, reverse intermediate gear 2, needle bearing 3 and washer 1 on the box in turn, and ensure correct gear 2 engagement.
Insert the reverse intermediate gear shaft 4.

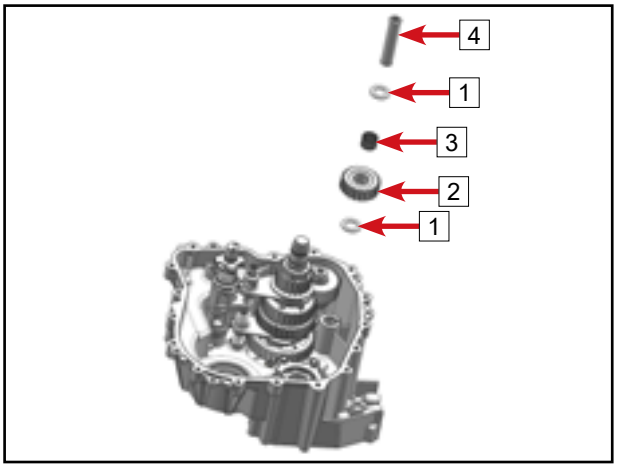

Install intermediate shaft assembly 1.

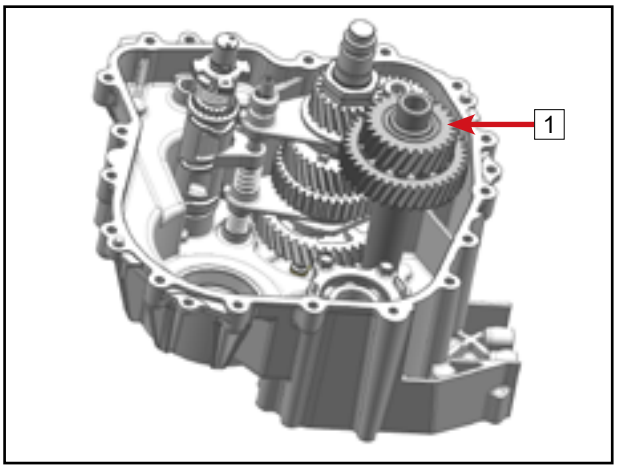

NOTE
Install the bearing inner ring 2 and 3 in place according to the marks made during disassembly.

Install the adjusting washer 1, bearing inner ring 2 and bearing inner ring 3 on the rear gear case gear 4.

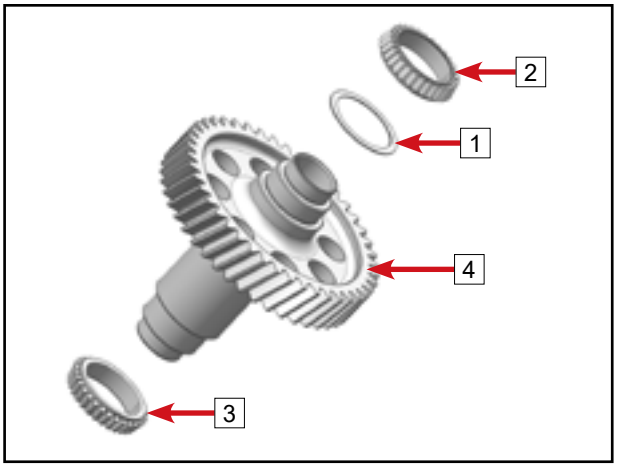

© CFMOTO Powersports, Inc. This manual is subject to all applicable copyright laws. Reproduction or duplication in any form, whole or in part, is strictly prohibited.

Install rear gear case gear assembly 1.

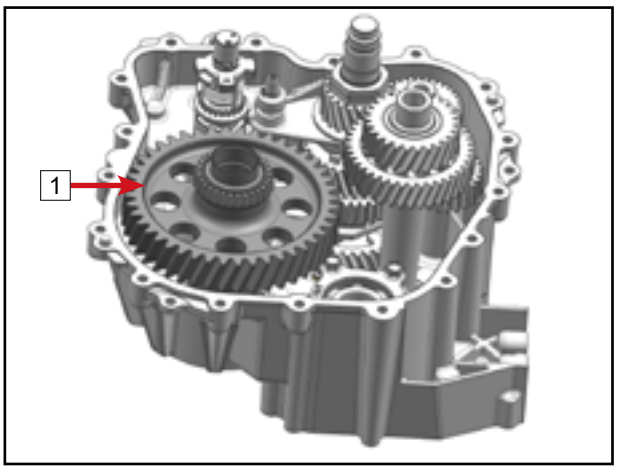

Install output shaft assembly 1.

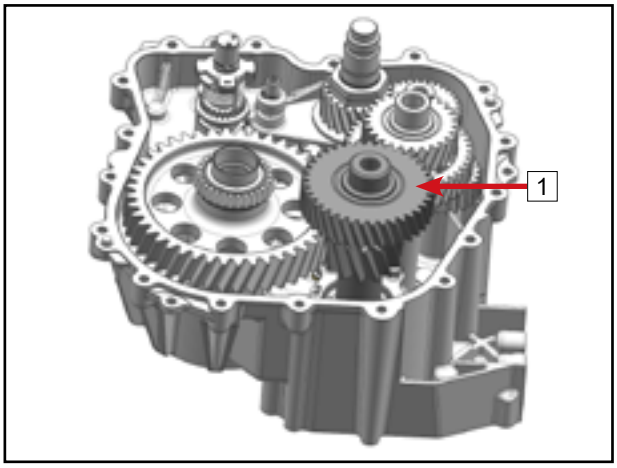

Turn the shift drum to neutral.
Install washer 1.

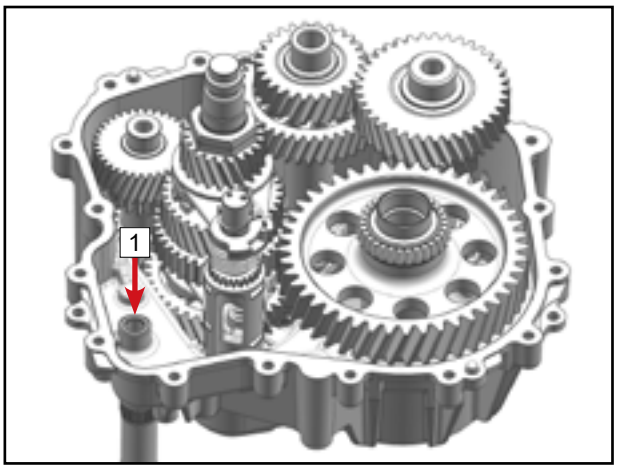

Install shift sector gear assembly 1.

NOTE
When in neutral position, the dot mark A should be aligned with the dot mark B.

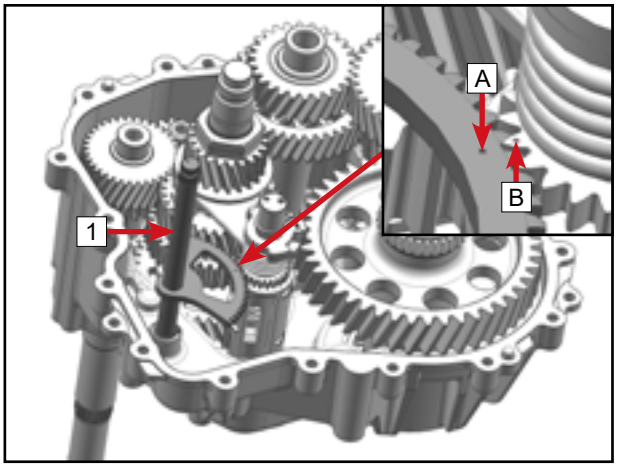

© CFMOTO Powersports, Inc. This manual is subject to all applicable copyright laws. Reproduction or duplication in any form, whole or in part, is strictly prohibited.

Install washer 1.
Ensure the cylindrical roller 2 is not lost.

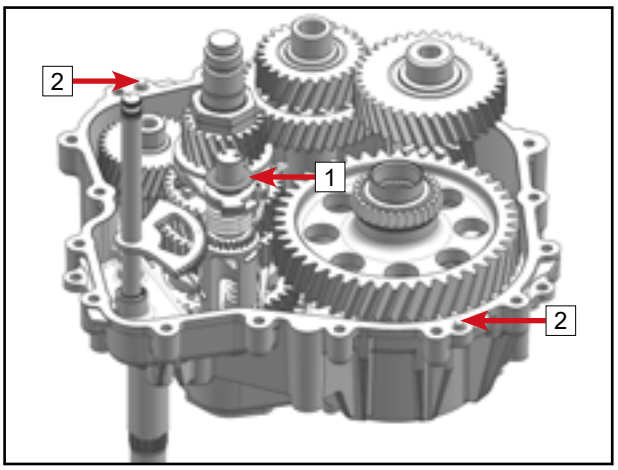

Ensure the sealing surface of the gearbox body is clean, dry and free of oil stain.
As shown on the right, apply an appropriate amount of KB599 flange sealant 1 on the sealing surface of the RH gearbox. The sealant shall be applied evenly and continuously.

NOTE
From applying flange sealant to completing the installation of the RH gearbox and tightening the fixing bolts, it should be controlled within 10 minutes. It is recommended that you keep everything needed close to your hand to save time.

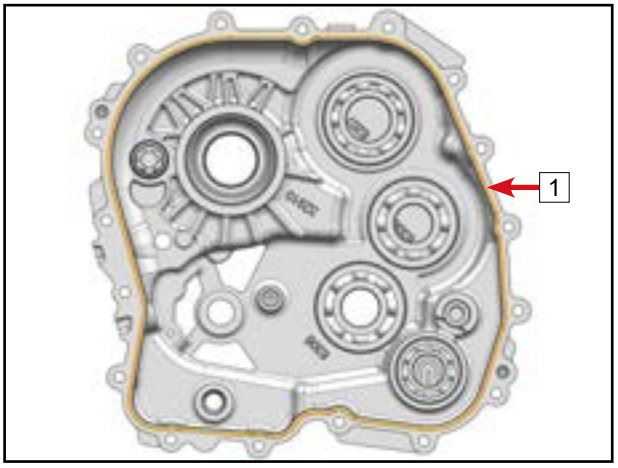

Install the RH gearbox A to the LH gearbox.
Install the gearbox bolts.
Tighten the gearbox bolts to the specified torque in three steps according to the order as shown in the right.

Gearbox Bolt (M8) Torque	
Step 1	10 N•m (7.3 ft-lb.)
Step 2	20 N•m (14.7 ft-lb.)
Step 3	26 N•m (19.2 ft-lb.)

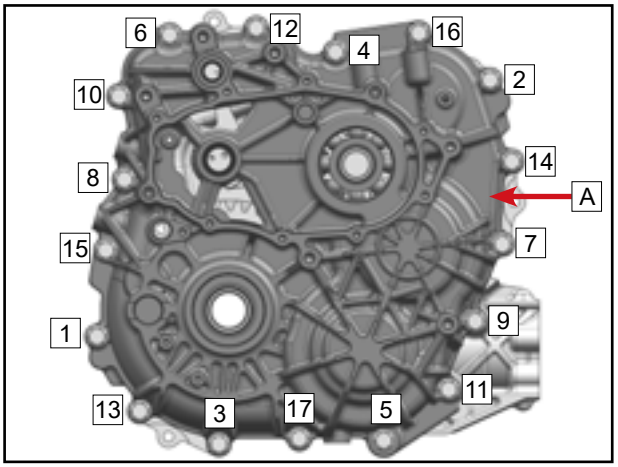

Remove spilled flange sealant.

Install the needle roller 1 into the shift drum hole.

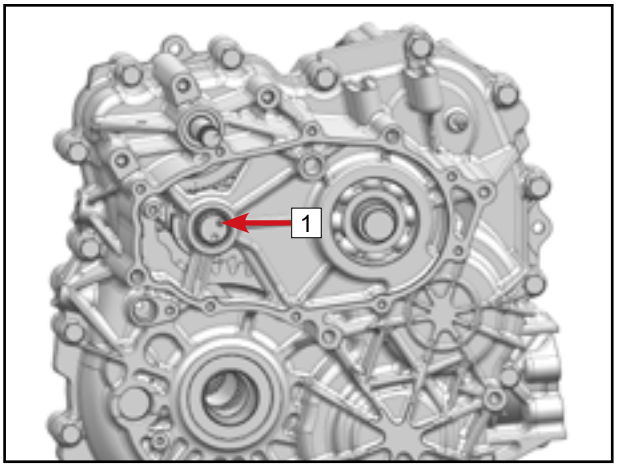

© CFMOTO Powersports, Inc. This manual is subject to all applicable copyright laws. Reproduction or duplication in any form, whole or in part, is strictly prohibited.

Assemble the shift positioning swing arm torsion spring 1, washer 2, shift positioning swing arm sub-assembly 3, shift positioning swing arm bushing 4, and bolt 5 together.
The end of the torsion spring should snap into the groove of the positioning swing arm.
The positioning swing arm sub-assembly should rotate flexibly on the bushing.

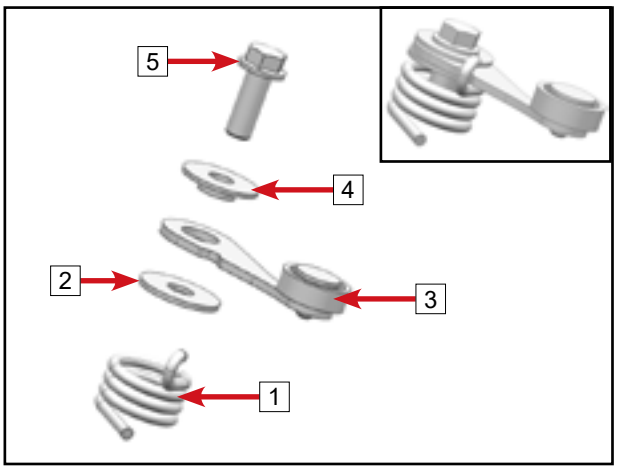

NOTE
The smooth surface of the washer faces the shift positioning swing arm sub-assembly.

Apply 243 thread locker on bolt 3.
Install shift positioning swing arm assembly 4, tighten bolt 3 to specified torque.

Shift Positioning Swing Arm Bolt 3	
Torque	10 N•m (7.3 ft-lb.)

Push the positioning swing arm 4 in the direction of the arrow to an appropriate position, and then install the positioning cam 2.
Apply 243 thread locker on screw 1.
Install screw 1, tighten to specified torque.

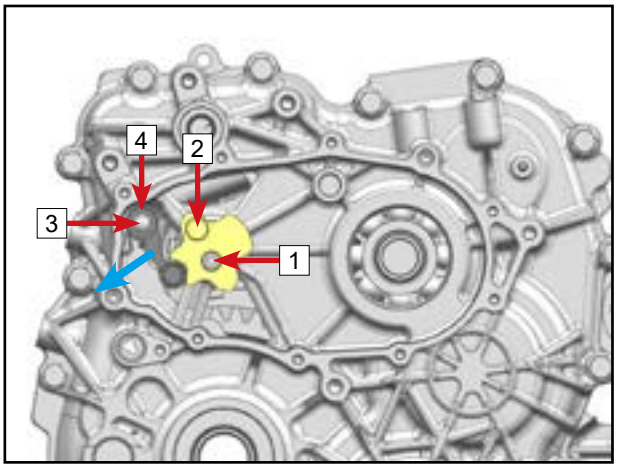

Positioning Cam Screw 1	
Torque	10 N•m (7.3 ft-lb.)

Set the gearbox at low gear.
Install the parking gear 1.
Apply 243 thread locker to bolt M22×1.5 2.
(Before applying thread locker, clean the oil and other impurities on the inner/outer threads and dry the threads.)
Install and pre-tighten the nut 2.

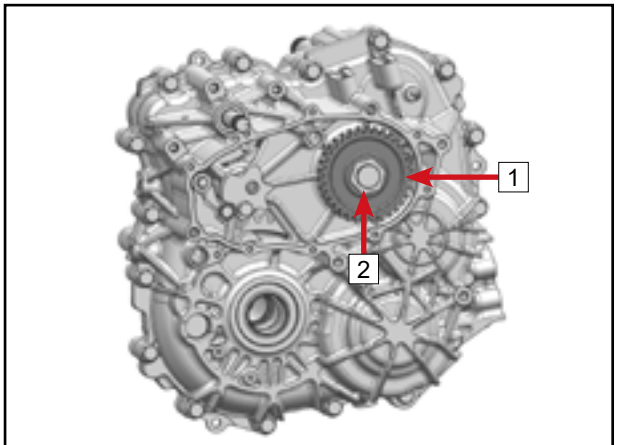

Install main shaft stopping tool A.

Main Shaft Stopping Tool (See section 4.1 for details.)

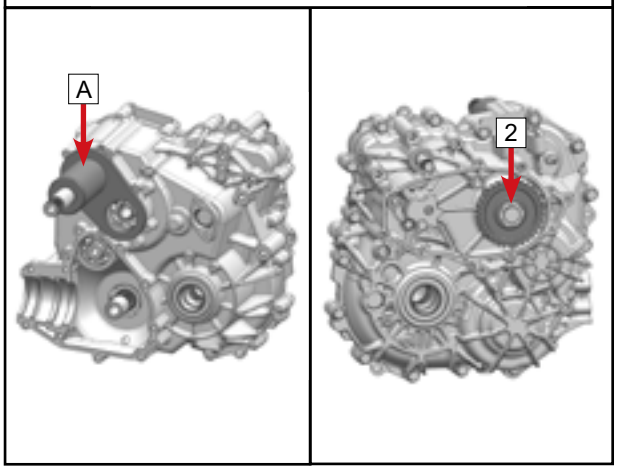

Tighten nut M22 × 1.5 2 to the specified torque.

Nut M22×1.5 2 (Parking Gear)	
Torque	170 N•m (125.3 ft-lb.)

© CFMOTO Powersports, Inc. This manual is subject to all applicable copyright laws. Reproduction or duplication in any form, whole or in part, is strictly prohibited.

Place the parking swing arm [1] in place.
Insert the parking swing arm shaft [2].
Install the dowel pin [3].

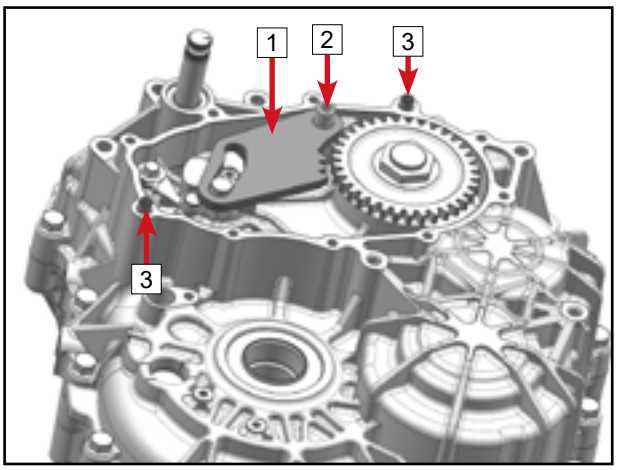

Ensure the sealing surface of the RH gearbox body and gearbox gearshift cover is clean, dry and free of oil stain.
As shown in the right image, apply an appropriate amount of KB599 flange sealant [1] on the sealing surface of the gearbox gearshift cover. The sealant shall be applied evenly and continuously.

NOTE
From applying flange sealant to completing the installation of the gearbox gearshift cover and tightening the fixing bolts, it should be controlled within 10 minutes. It is recommended that you keep everything needed close to your hand to save time.

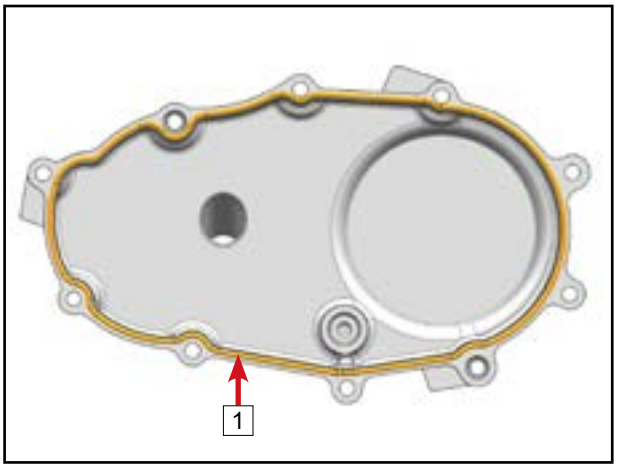

Install gearbox gearshift cover [4].
Install bolts [1], bolts [2] and clip assembly [3].

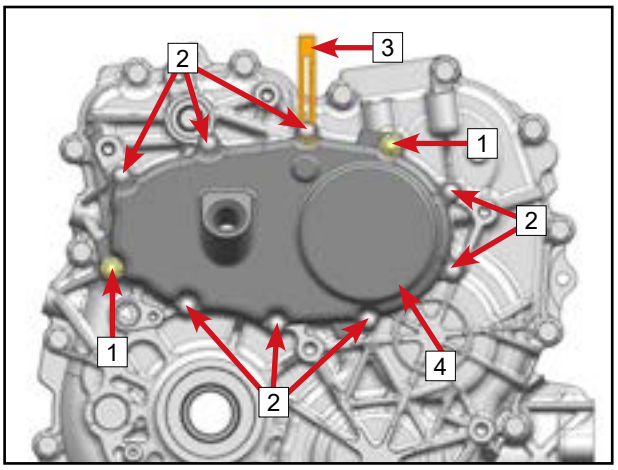

Tighten the bolts of the gearbox gearshift cover to the specified torque in the order of [1] ~ [10].

Gearshift Cover Bolt M6	
Torque	10 N•m (7.3 ft-lb.)

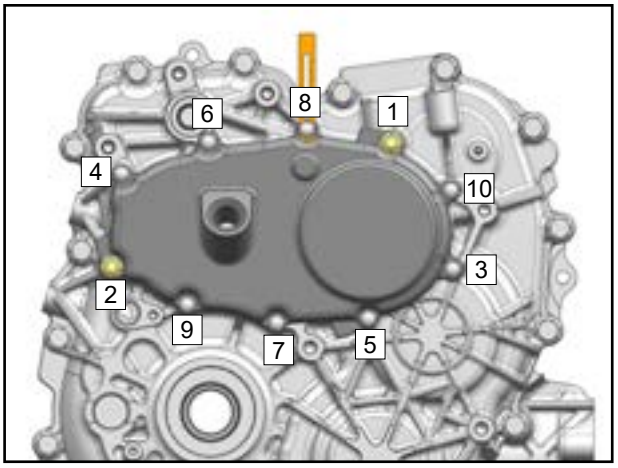

Remove spilled flange sealant.

© CFMOTO Powersports, Inc. This manual is subject to all applicable copyright laws. Reproduction or duplication in any form, whole or in part, is strictly prohibited.

Apply 243 thread locker to nuts M24×1.5 [1] (Before applying thread locker, clean the oil and other impurities on the inner/outer threads and dry the threads.)
Install and pre-tighten the nuts [1] .
Ensure the gearbox at low gear.
Install main shaft stopping tool [A].

Main Shaft Stopping Tool (See section 4.5.1 for details.)

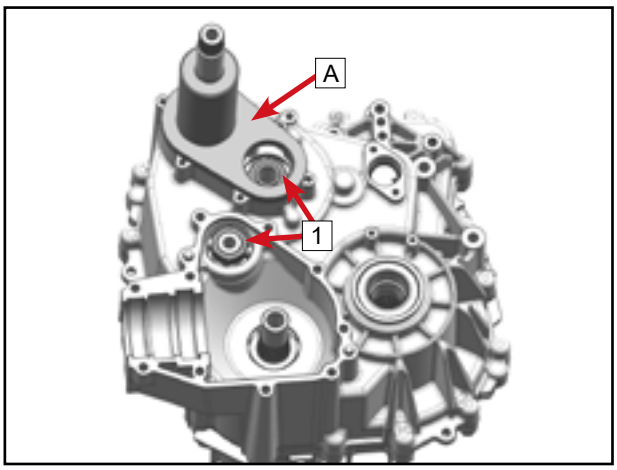

Tighten nuts [1] to the specified torque.

Nut M24×1.5 [1] (Countershaft and Intermediate Shaft)	
Torque	170 N•m (125.3 ft-lb.)

Install drive bevel gear adjusting washer [1].

NOTE
If any part of drive bevel gear, driven bevel gear shaft, LH gearbox and gearbox bevel gear cover is replaced, it is required to select proper adjusting washer again. Refer to the Transmission Bevel Gear Clearance Adjustment section.

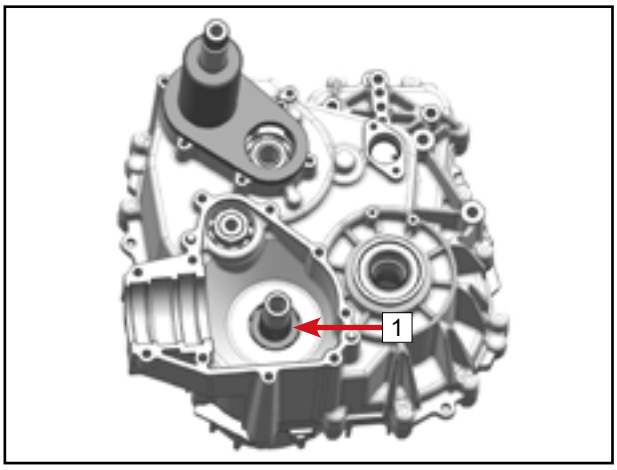

Install drive bevel gear [3] .
Install the drive bevel gear adjusting washer (group marked F) [2] used as a common washer.
Install and tighten nut M26×1.5×17.5 [1] (left-hand thread) to the specified torque.

Nut M26×1.5×17.5 [1] (Left-hand Thread, Drive Bevel Gear)	
Torque	250 N•m (184.3 ft-lb.)

Remove main shaft stopping tool [A].

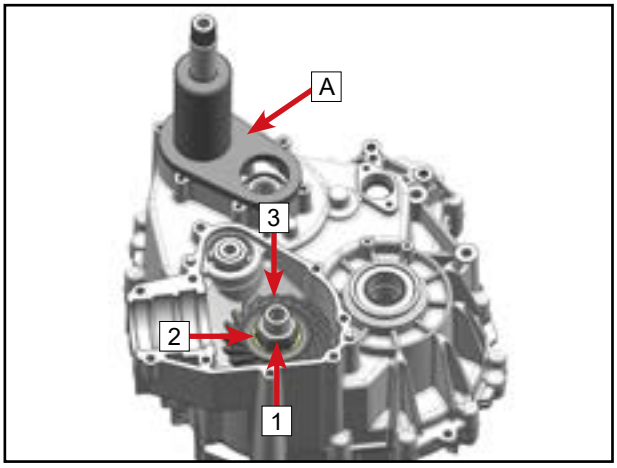

© CFMOTO Powersports, Inc. This manual is subject to all applicable copyright laws. Reproduction or duplication in any form, whole or in part, is strictly prohibited.

Clean the oil and other impurities on the inner/outer threads and dry the threads.
Install the drive bevel gear nut holder [B] to fix the nut below.

Drive Bevel Gear Nut Holder (See section 4.5.1 for details.)

Apply 272 thread locker to the upper nut M26×1.5 [1] (left-hand thread).
Install and tighten nut [1] (left-hand thread) to the specified torque.

Nut M26×1.5 [1] (Left-hand Thread, Drive Bevel Gear)	
Torque	300 N•m (221.2 ft-lb.)

Remove the bevel gear nut holder.

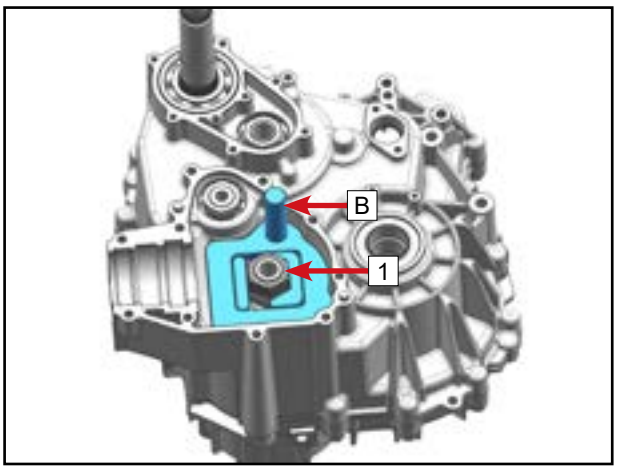

Install the driven bevel gear shaft assembly [2].
Ensure that the cylindrical roller [1] is not lost.

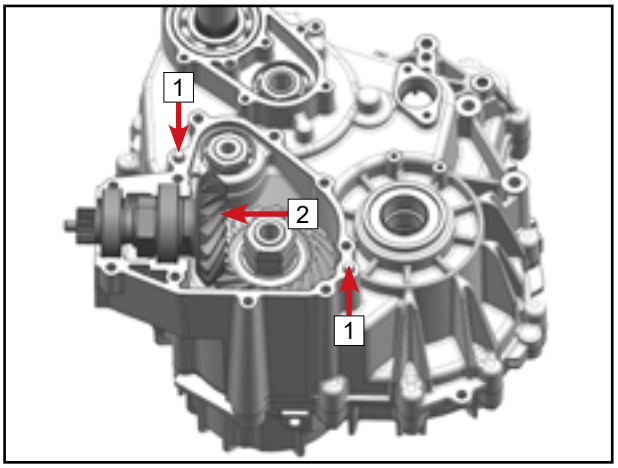

Ensure the sealing surface of the LH gearbox body and gearbox bevel gear cover is clean, dry and free of oil stain.
As shown in the right image, apply an appropriate amount of KB599 flange sealant [1] on the sealing surface of the gearbox bevel gear cover. The sealant shall be applied evenly and continuously.

NOTE
From applying flange sealant to completing the installation of the gearbox bevel gear cover and tightening the fixing bolts, it should be controlled within 10 minutes. It is recommended that you keep everything needed close to your hand to save time.

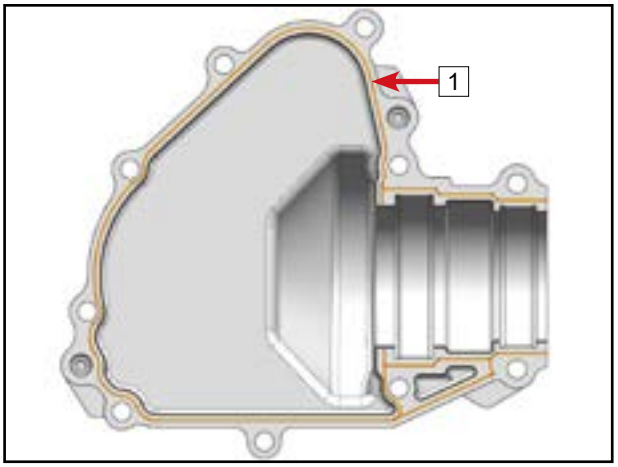

© CFMOTO Powersports, Inc. This manual is subject to all applicable copyright laws. Reproduction or duplication in any form, whole or in part, is strictly prohibited.

Install the gearbox bevel gear cover [A].
Bevel gear cover bolts apply 272 thread locker (before applying thread locker, clean the oil and other impurities on the inner/outer threads and dry the threads.)
Install bevel gear cover bolts.
[1] , [3] , [5] , [7] : Bolt M8×45
Other bolt: Bolt M8×28

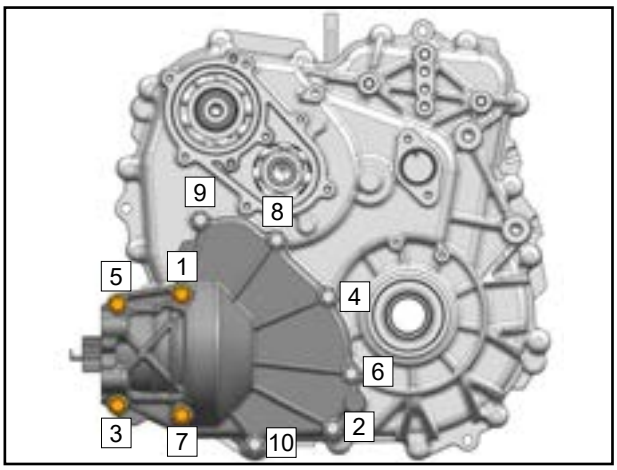

Tighten the bolts of the Bevel gear cover to the specified torque in the order of [1] ~ [10].

Bevel Gear Cover Bolt (M8) Torque	
Step 1	10 N•m (7.3 ft-lb.)
Step 2	20 N•m (14.7 ft-lb.)
Step 3	35 N•m (25.8 ft-lb.)

Remove spilled flange sealant.

Nut M34×1.5×11.5 [4] apply 272 thread locker (Before applying thread locker, clean the oil and other impurities on the inner/outer threads and dry the threads.)
Install and pre-tighten the nut [4].
Install M34 nut sleeve [1] and gearbox input shaft cover bolts [2].
Install the spline sleeve [3] onto the main shaft.

M34 Nut Sleeve (See section 4.5.1 for details.)
Spline Sleeve (See section 4.5.1 for details.)

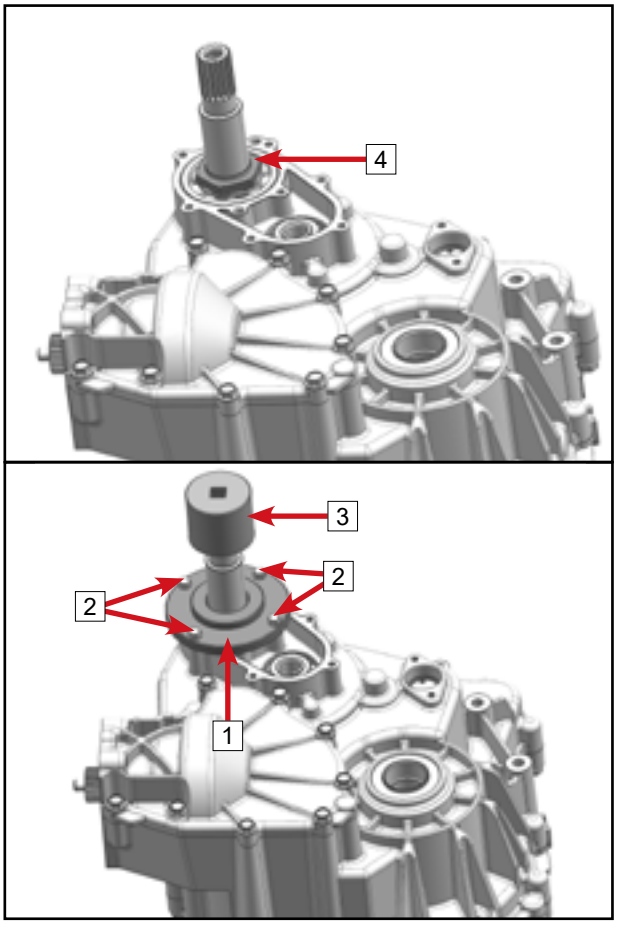

Rotate the spline sleeve [3] counterclockwise and tighten the nut [4] to the specified torque.

Nut M34×1.5×11.5 [1] (Main Shaft)	
Torque	200 N•m (147.5 ft-lb.)

Remove the tool [1] and tool [3].

© CFMOTO Powersports, Inc. This manual is subject to all applicable copyright laws. Reproduction or duplication in any form, whole or in part, is strictly prohibited.

Install dowel pin 1.

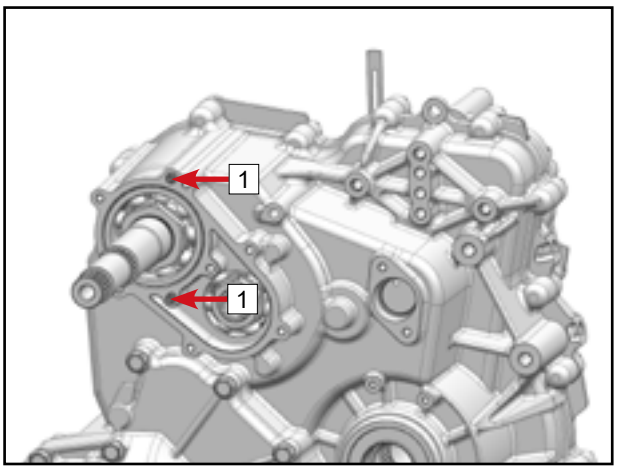

Ensure the sealing surface of the LH gearbox and gearbox input shaft cover is clean, dry and free of oil stain.
As shown in the right image, apply an appropriate amount of KB599 flange sealant 1 on the sealing surface of the gearbox input shaft cover. The sealant shall be applied evenly and continuously.

NOTE
From applying flange sealant to completing the installation of the gearbox input shaft cover and tightening the fixing bolts, it should be controlled within 10 minutes. It is recommended that you keep everything needed close to your hand to save time.

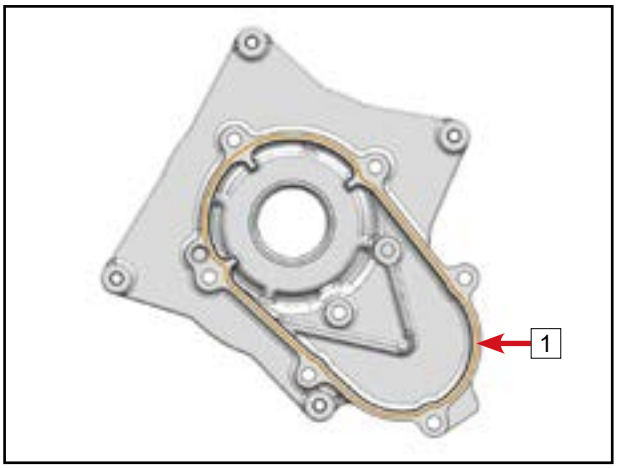

Install gearbox input shaft cover A .
Tighten the bolts of the gearbox input shaft cover to the specified torque in the order of 1 ~ 7.

Gearbox Input Shaft Cover Bolt M6	
Torque	10 N•m (7.3 ft-lb.)

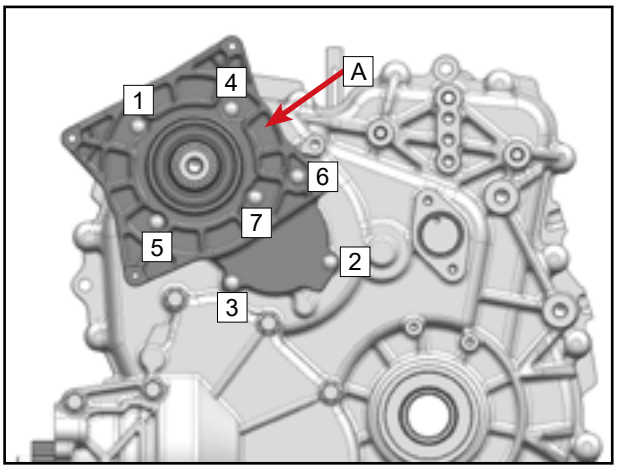

Remove spilled flange sealant.

Speedometer Sensor and Breather Hose Assembly Installation
Apply engine oil to the O-ring 3 on the speedometer sensor 2.
Insert the speedometer sensor 2 into the RH gearbox.
Apply 243 thread locker to bolt 1.
Install bolt 1 and tighten to specified torque.

Speedometer Sensor Bolt 1	
Torque	10 N•m (7.3 ft-lb.)

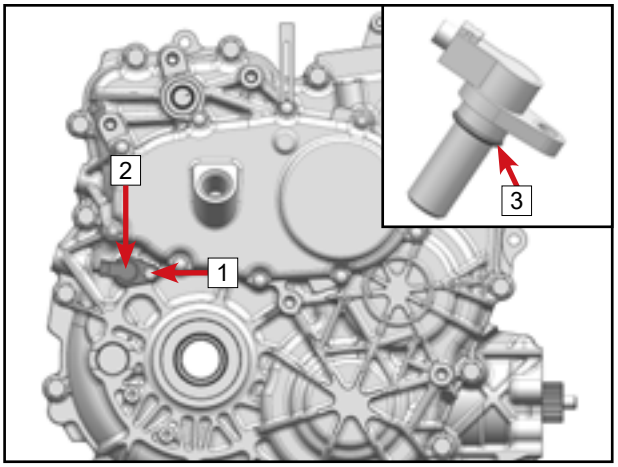

© CFMOTO Powersports, Inc. This manual is subject to all applicable copyright laws. Reproduction or duplication in any form, whole or in part, is strictly prohibited.

Put a new variable one-ear clamp [1] on the breather hose assembly [2].
Install the breather hose assembly [2] onto the pipe joint of the RH gearbox and clamp the clamp [1].

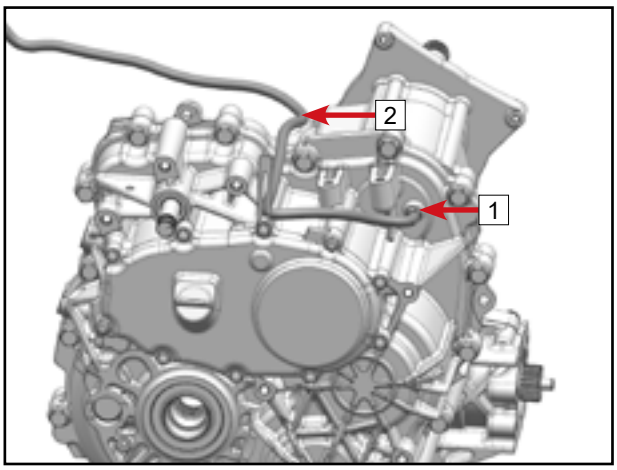

Front Hook Installation

Place the front hook [2] in place.
Install the screws [1] and tighten to the specified torque.

Front Hook Screw [1]	
Torque	27 N•m (19.9 ft-lb.)

Place the cable bracket 2 [4] in place.
Install the screws [3] and tighten to the specified torque.

Cable Bracket Screw [3]	
Torque	27 N•m (19.9 ft-lb.)

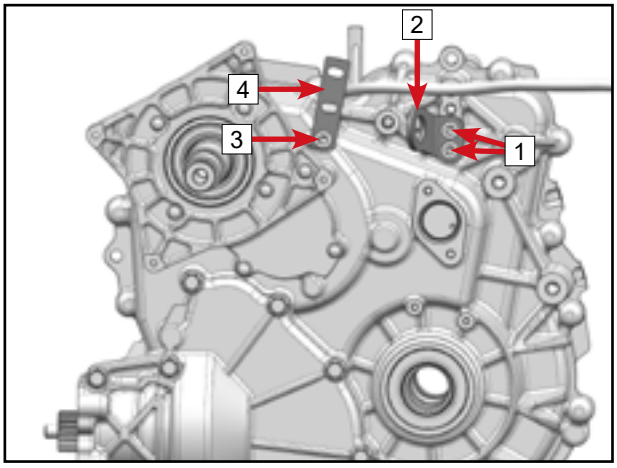

Gear Sensor Installation

Install the contact spring [2] and the spherical contact [1] in turn into the shift drum hole.

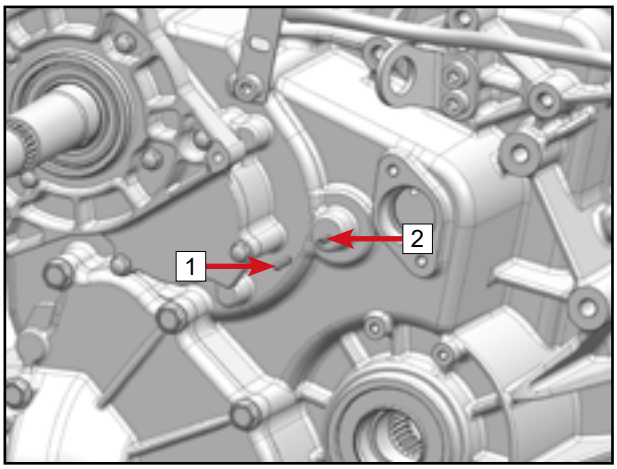

Apply oil to the O-ring [3] on the gear sensor [2].
Insert the gear sensor [2] into the LH case of the gearbox.
Apply 243 thread locker to the bolts [1].
Install the bolts [1] and tighten to the specified torque.

Gear Sensor Bolt [1]	
Torque	10 N•m (7.3 ft-lb.)

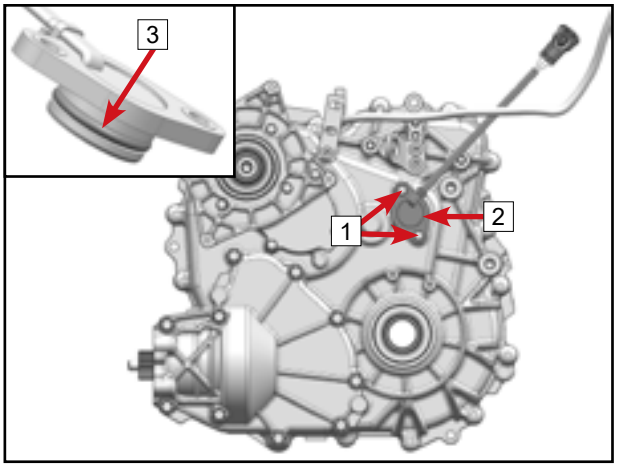

© CFMOTO Powersports, Inc. This manual is subject to all applicable copyright laws. Reproduction or duplication in any form, whole or in part, is strictly prohibited.

Gearbox Bracket 1 Assembly and Gearbox Connecting

Install the output spline shaft [1] into the gearbox bracket 1 assembly [2] along the arrow direction.

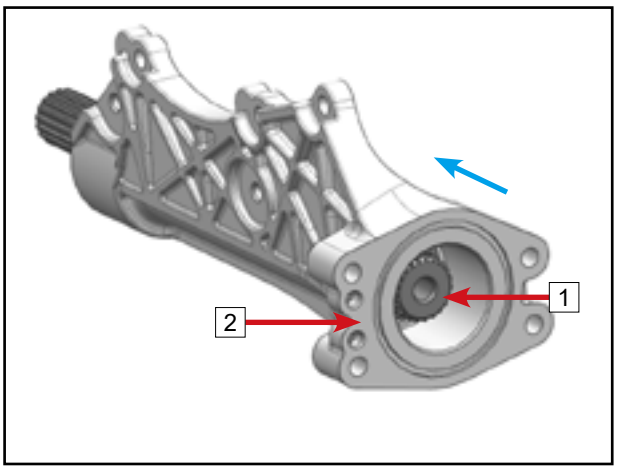

Install the O-ring [2] onto the gearbox bracket.

Align the spline and install the output spline sleeve [1].

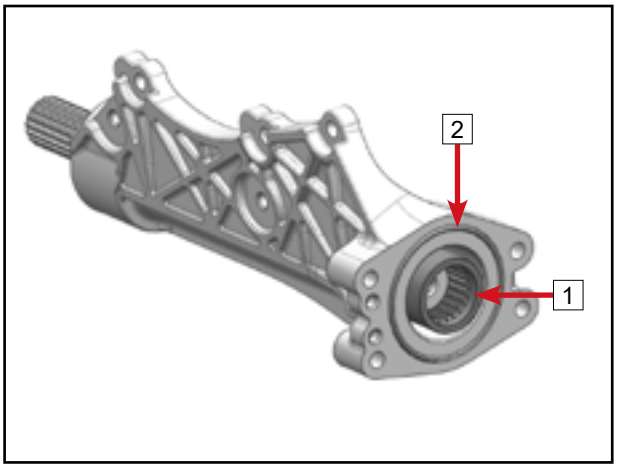

Install dowel pin [1].

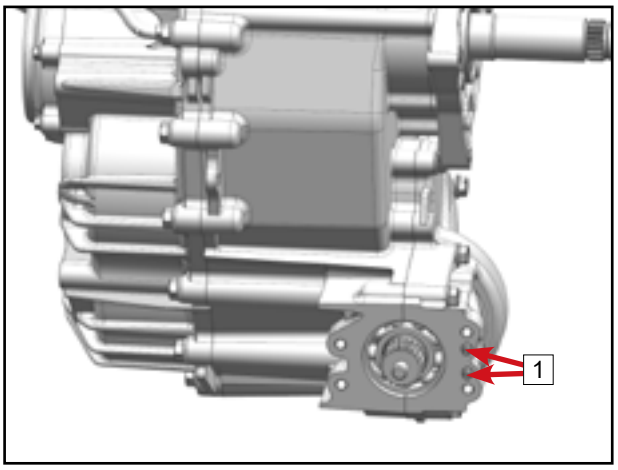

Align the spline and place the gearbox bracket 1 assembly [2] in place.

Connect the gearbox bracket 1 assembly [2] to the gearbox with bolts [1].

Tighten the bolts [1] cross diagonally to the specified torque.

Gearbox Bracket 1 Bolt [1]	
Torque	27 N•m (19.9 ft-lb.)

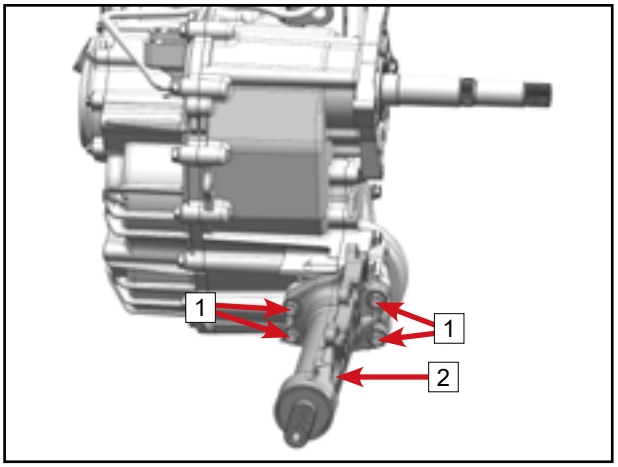

© CFMOTO Powersports, Inc. This manual is subject to all applicable copyright laws. Reproduction or duplication in any form, whole or in part, is strictly prohibited.

4.5.4 Rear Gear Case Gear Axial Clearance Inspection and Adjustment

NOTE
Measure and check after cleaning.

Measure the vertical distance A between the end face of the bearing inner ring 1 and the sealing surface of the LH gearbox 2.

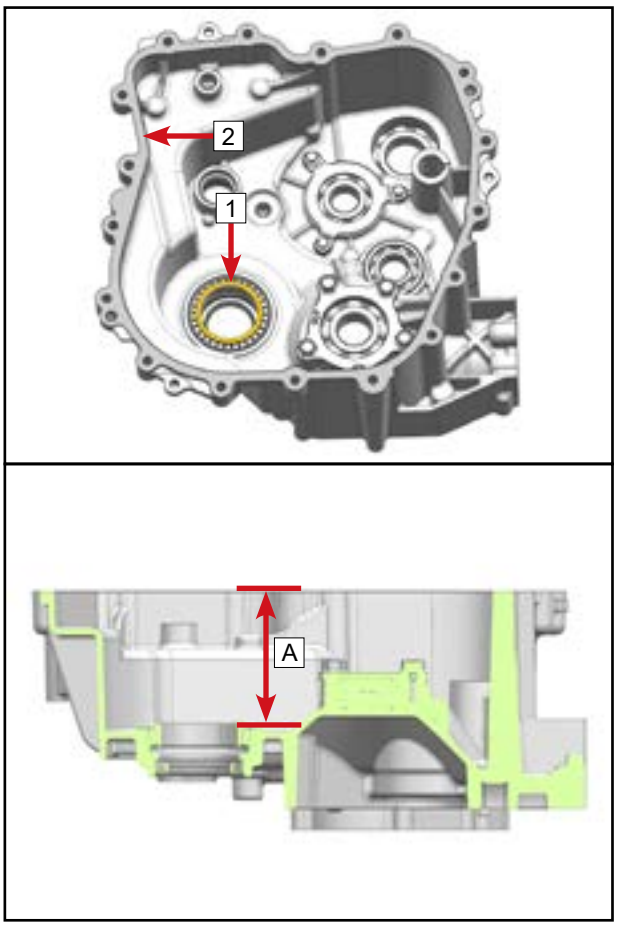

Measure the vertical distance B between the end face of the bearing inner ring 3 and the sealing surface of the RH gearbox 4.

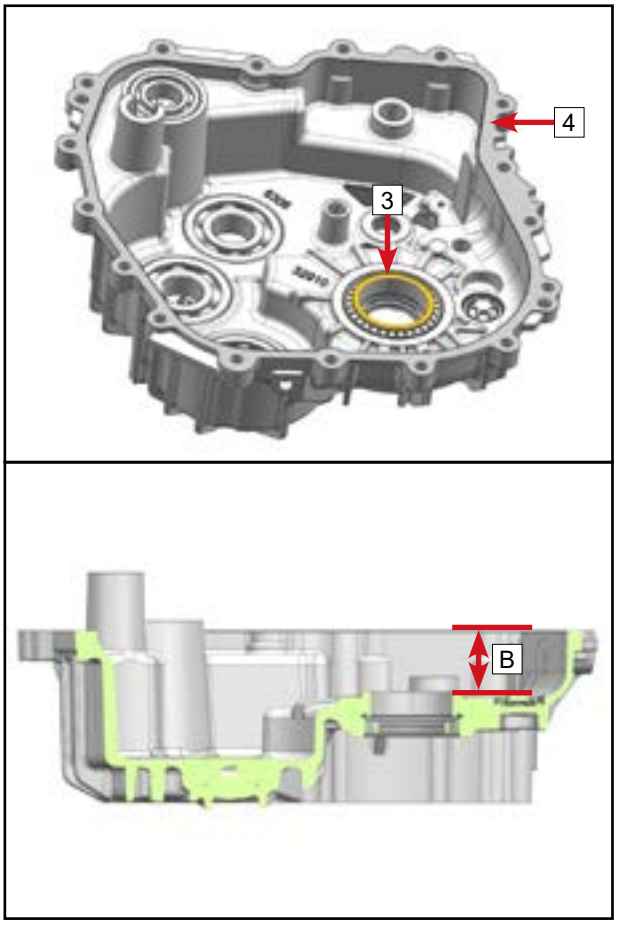

© CFMOTO Powersports, Inc. This manual is subject to all applicable copyright laws. Reproduction or duplication in any form, whole or in part, is strictly prohibited.

Measure the length C of rear gear case gear.

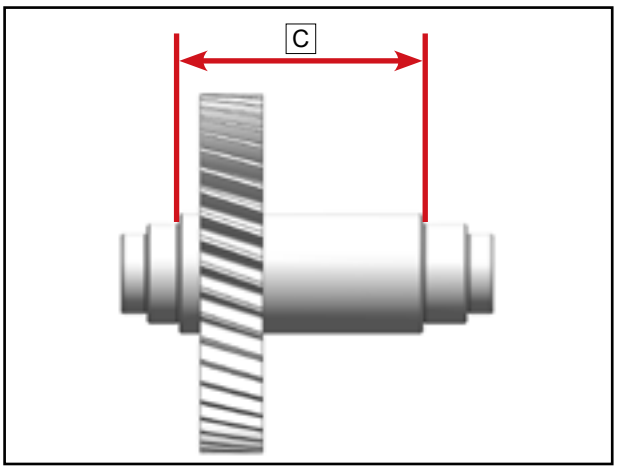

Measure the total thickness D of the adjusting washers 5.

NOTE
The number of adjusting washers 5 is usually 1 ~ 3.

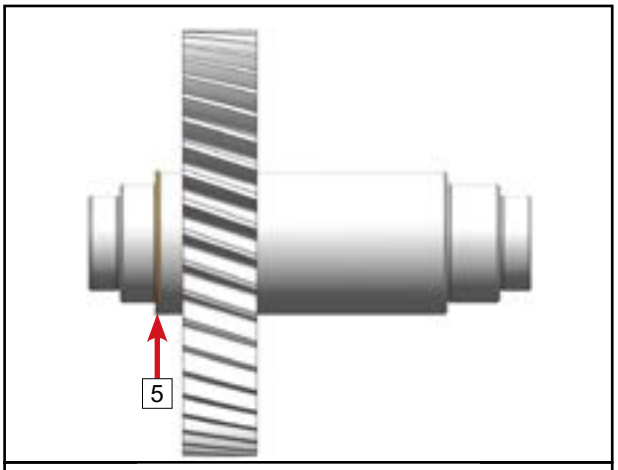

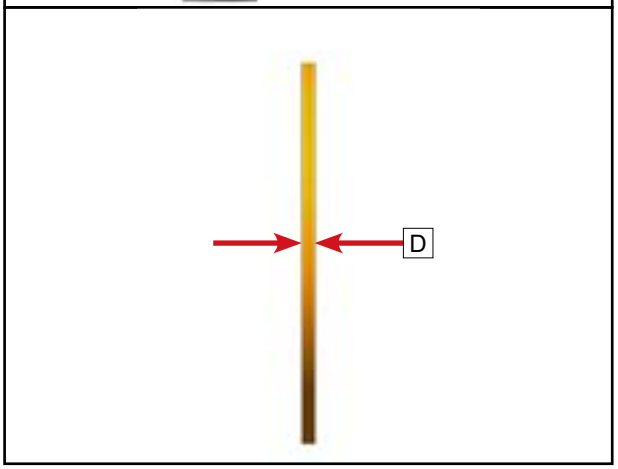

If the axial clearance of rear gear case differential is F, then:

F=A+B-C-D

Axial Clearance of Rear Gear Case Gear F	
Standard	-0.1 mm≤ F ≤-0.05 mm

If the axial clearance F exceeds the specified range, replace the adjusting washer with proper thickness until the clearance is qualified.

Adjusting Washer Thickness Specification
0.10mm，0.30mm，0.50mm，0.90mm，0.92mm，0.94mm，0.96mm，0.98mm，1.0mm

© CFMOTO Powersports, Inc. This manual is subject to all applicable copyright laws. Reproduction or duplication in any form, whole or in part, is strictly prohibited.

4.5.5 Transmission Bevel Gear Clearance Adjustment

Whenever the LH gearbox and/or the gearbox bevel gear cover and/or the bevel gear (in pair) are replaced, the adjusting washer must be adjusted.

⚠WARNING

For proper engagement of bevel gears, both gear backlash and tooth contact must be in specification.

Bevel Gear Backlash Inspection

Clean the sealing surface of the gearbox body completely.

Install the output shaft assembly [1] onto the LH gearbox.

Ensure that the cylindrical rollers [2] are not lost.

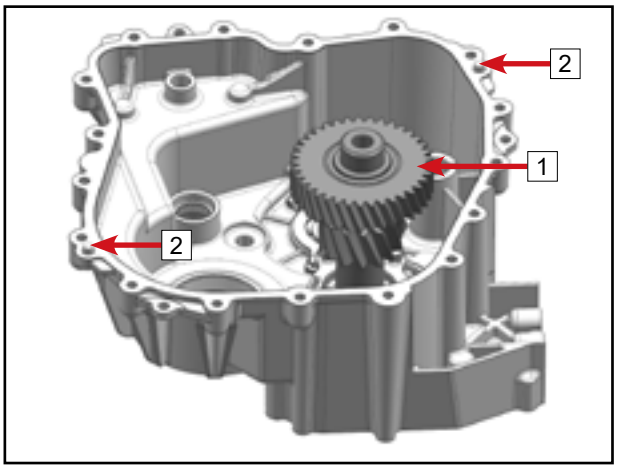

Install the RH gearbox [1] to the LH gearbox.

Install and tighten several gearbox bolts [2] properly.

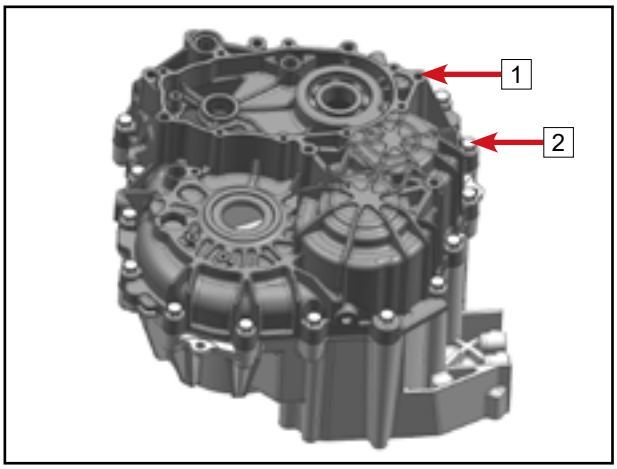

Install drive bevel gear adjusting washer [1] .

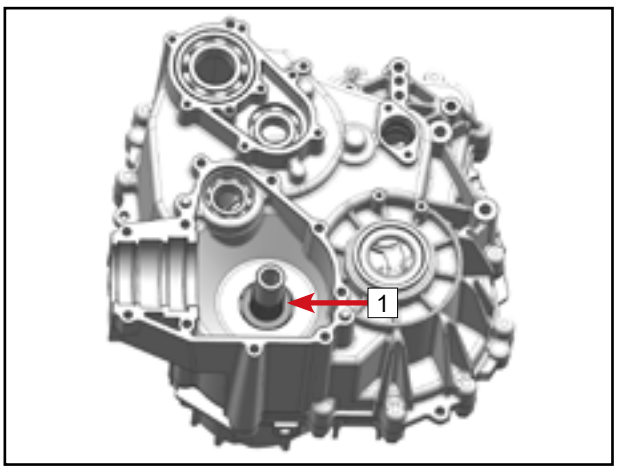

© CFMOTO Powersports, Inc. This manual is subject to all applicable copyright laws. Reproduction or duplication in any form, whole or in part, is strictly prohibited.

Install drive bevel gear [1].
Install the drive bevel gear adjusting washer (group marked F) [2] used as a common washer.
Install and tighten nut M26×1.5×17.5 [3] (left-hand thread).

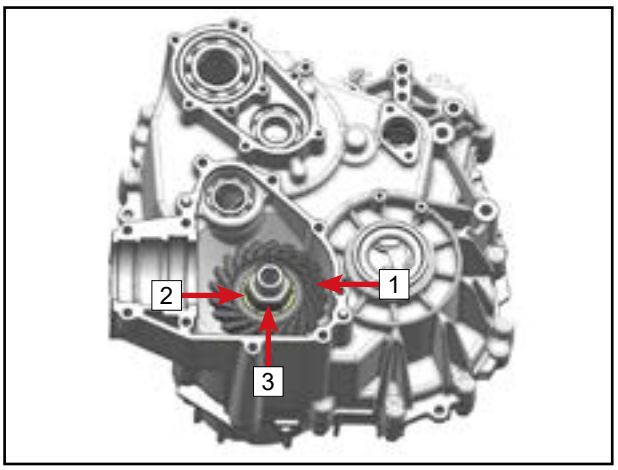

Install driven bevel gear shaft assembly [1].

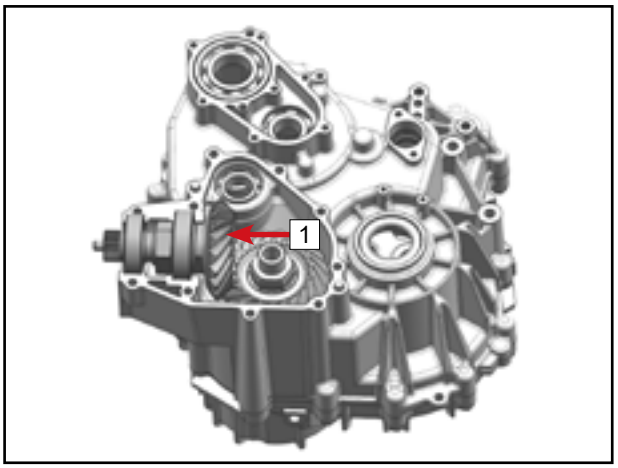

Install driven bevel gear press tool [1].

Driven Bevel Gear Press Tool
(See section 4.5.1 for details.)

Install and tighten gearbox bevel gear cover bolts [2].

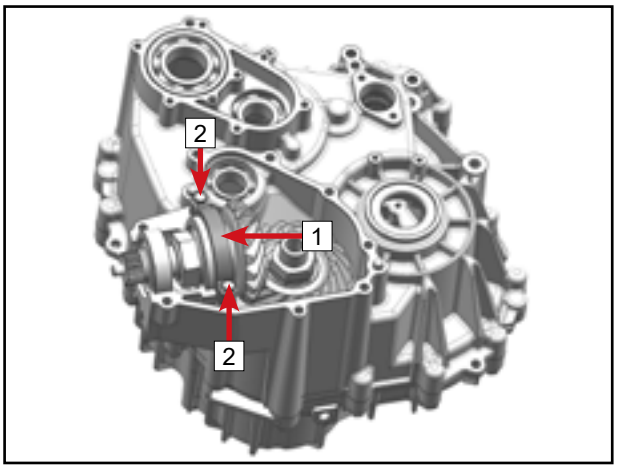

Install bevel gear side clearance measuring block [1].

Bevel Gear Side Clearance Measuring Block
(See section 4.1 for details.)

Install a suitable M8 bolt [2] to limit the axial movement of the side clearance measuring block.

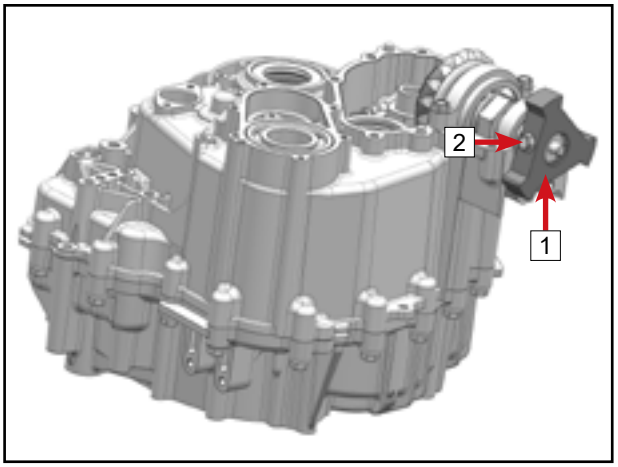

© CFMOTO Powersports, Inc. This manual is subject to all applicable copyright laws. Reproduction or duplication in any form, whole or in part, is strictly prohibited.

Install drive bevel gear stopping tool 1 to limit the rotation of drive bevel gear.

Drive Bevel Gear Stopping Tool
(See section 4.1 for details.)

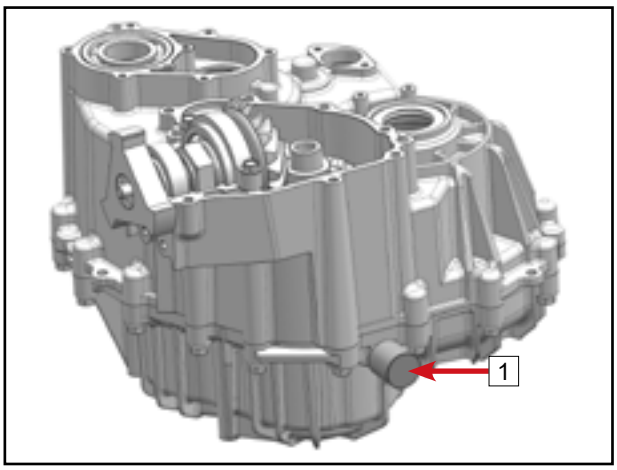

Install dial indicator 1.

Centerline Distance A
45 mm (1.77165 in.)

Swing the side clearance measuring block 2 back and forth to measure the backlash.

NOTE
Take measurements at 4 points in directions perpendicular to each other.

Adjust the thickness of driven bevel gear shims if beyond the standard. Repeat backlash measurements until the clearance is qualified.

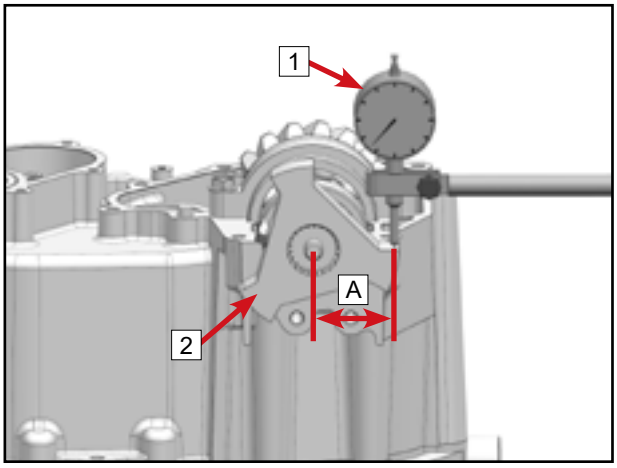

Bevel Gear Backlash: 0.1 ~ 0.2 mm.

Adjusting Method

Measured Backlash	Adjust shim thickness
<0.1 mm	Decrease thickness
0.1 ~ 0.2 mm	OK
>0.2 mm	Increase thickness

Driven Bevel Gear Adjusting Washer Grouping

The group of driven bevel gear adjusting washer is shown in the following table, and the grouping marking is engraved on the end face of the washer.

Adjust Shim Thickness T (mm)	Grouping Marking
2.610 ±0.015	A
2.670 ±0.015	B
2.730 ±0.015	C
2.790 ±0.015	D
2.850 ±0.015	E
2.910 ±0.015	F
2.970 ±0.015	G
3.030 ±0.015	H
3.090 ±0.015	I
3.150 ±0.015	J
3.210 ±0.015	K

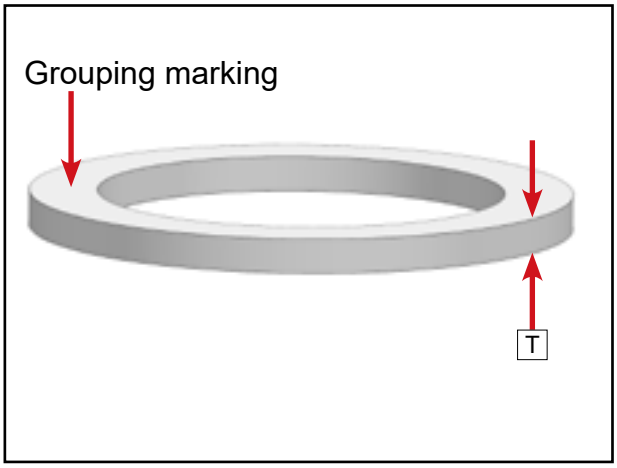

© CFMOTO Powersports, Inc. This manual is subject to all applicable copyright laws. Reproduction or duplication in any form, whole or in part, is strictly prohibited.

Gear Tooth Contact Inspection

After adjusting backlash, inspect the gear tooth contact pattern:

Remove the driven bevel gear shaft assembly from the gearbox.

Wipe and remove dirt and grease on each tooth surface of drive and driven bevel gears.

Apply dye to each tooth surface of the driven bevel gear.

Install the driven bevel gear shaft assembly and driven bevel gear press tool. (Refer to Bevel Gear Clearance Adjustment above.)

Rotate the driven bevel gear shaft several times forward and backward.

Remove the drive bevel gear and driven bevel gear shaft assembly, and inspect the application of dye on the drive bevel gear.

Status ①	On the top	No
Status ②	In the middle	Yes
Status ③	On the bottom	No

If the contact area is qualified (Status ②), continue with gearbox assembly.

If the contact area is not qualified (Status ① or ③), adjust the thickness of drive bevel gear adjusting shims and repeat the pattern inspection procedure until qualified.

Adjusting Method

Contact Condition	Adjust Shim Thickness
Status ①	Increase thickness
Status ③	Decrease thickness

⚠ WARNING

After adjustment, measure backlash to verify it has not changed. If it is not qualified, replace drive and driven bevel gears until the gear surface contact condition and gear backlash is qualified.

NOTE

Clean the dye on gear teeth after adjustment.

①



Unqualified

②

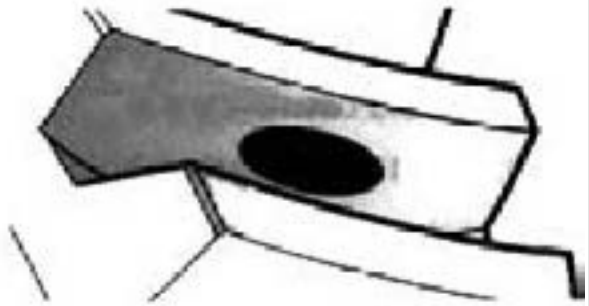

Qualified

③

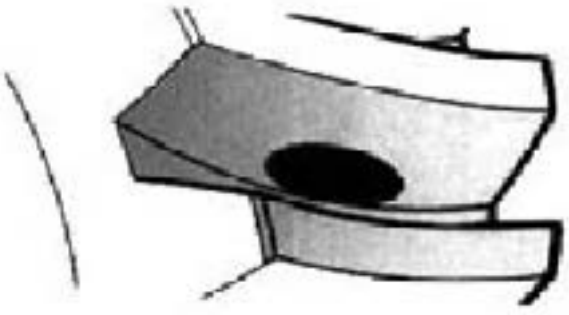

Unqualified

© CFMOTO Powersports, Inc. This manual is subject to all applicable copyright laws. Reproduction or duplication in any form, whole or in part, is strictly prohibited.

Drive Bevel Gear Adjusting Washer Grouping

The group of drive bevel gear adjusting washer is shown in the following table, and the grouping marking is engraved on the end face of the washer.

Adjust Shim Thickness T (mm)	Grouping Marking
1.325 ±0.015	A
1.375 ±0.015	B
1.425 ±0.015	C
1.475 ±0.015	D
1.525 ±0.015	E
1.575 ±0.015	F

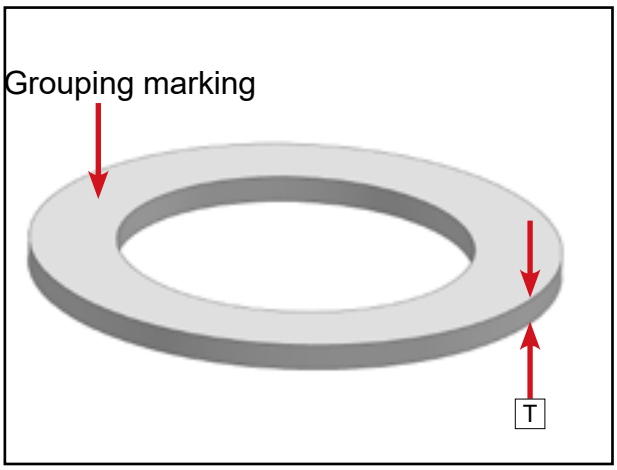

© CFMOTO Powersports, Inc. This manual is subject to all applicable copyright laws. Reproduction or duplication in any form, whole or in part, is strictly prohbited.

4.6 Gear Shifter

4.6.1 Shifter Inspection and Adjustment

Shifter Inspection

Inspect the shifter for cracks, severe wear or other or damage. Replace if necessary.

If the following occurs, most likely the shift cable needs to be adjusted:

- Gear position is not displayed on the dashboard
- Engagement noise when decelerating
- Unable to shift gears
- Excessive gear clearance (noise)
- Shifter moves out of the needed range

Shifter Cable Adjustment

Adjust the shift cable as follows:

Place the shift lever in neutral.

NOTE
Move the vehicle back and forth to ensure that the gearbox is set in neutral.

Secure the vehicle with wheel chocks.

Refer to the Body Panels section for removal:

— The passenger seat (Z10 or the rear row RH seat (Z10-4)

— Gearshift adjusting cover [1]

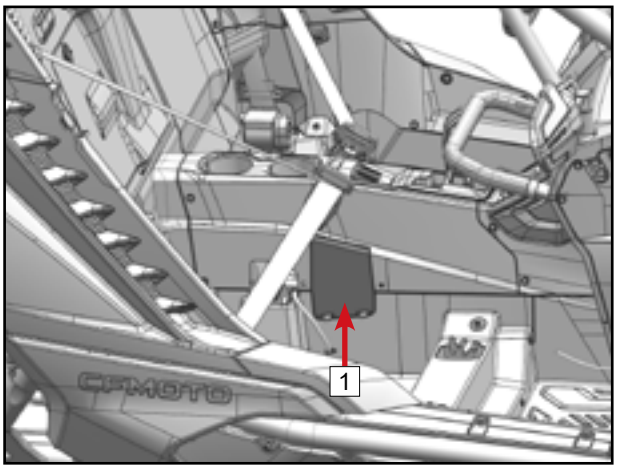

Release cable adjusting nuts [1] and [2].

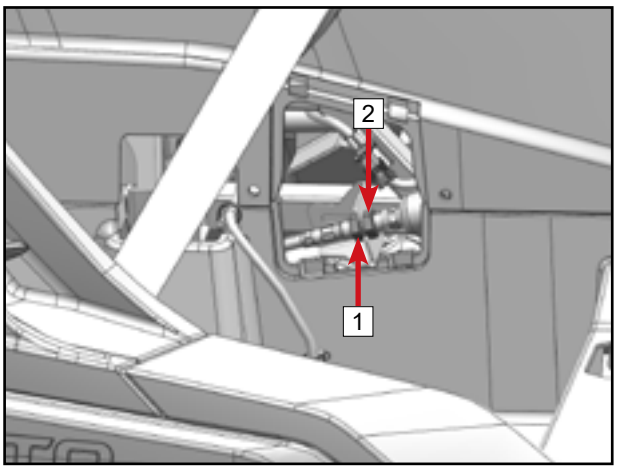

Adjust the cable adjusting nut so that the shift lever is aligned with the neutral (N) position.

Lock the adjusting nut.

Move the shift lever to R position and then to H.

Place the shift lever in neutral position.

Check that the shift lever is aligned to the neutral position and re-adjust as necessary.

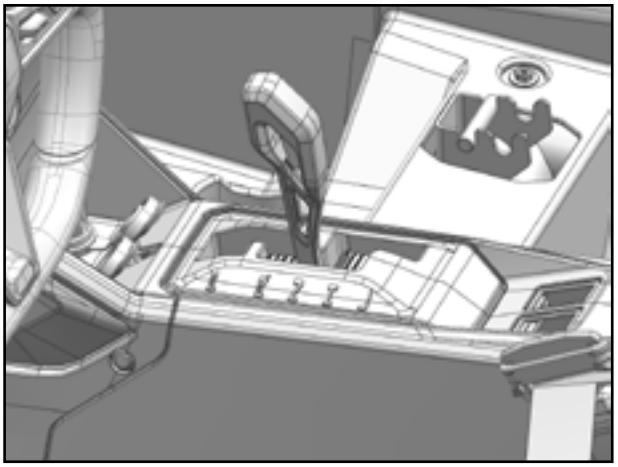

© CFMOTO Powersports, Inc. This manual is subject to all applicable copyright laws. Reproduction or duplication in any form, whole or in part, is strictly prohibited.

Test the shifter to confirm that the shift system is working properly in all positions.

⚠WARNING

After the adjustment is completed, ensure that the parking gear position is working properly.

4.6.2 Shifter Assembly Removal

Secure the vehicle with wheel chocks.
Place the shift lever in neutral position.
Remove the middle cover [1]. (refer to Body Panels section)

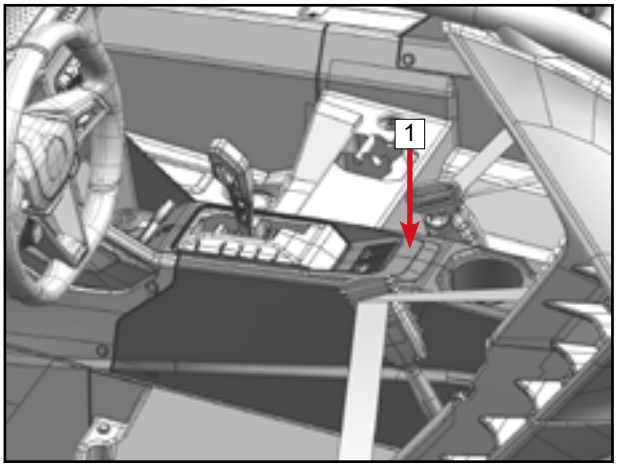

Separate the shift cable [2] from the shift swing arm [1].
Inspect the shift cable. If worn or damaged, replace.

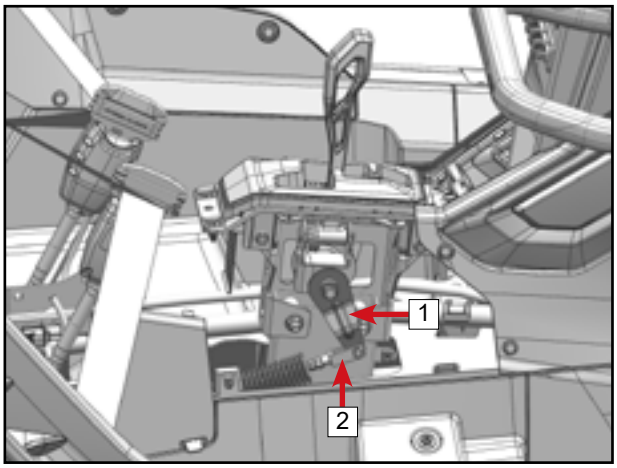

Remove the nuts [1] and bolts [2].
Remove the shift mechanism assembly [3].

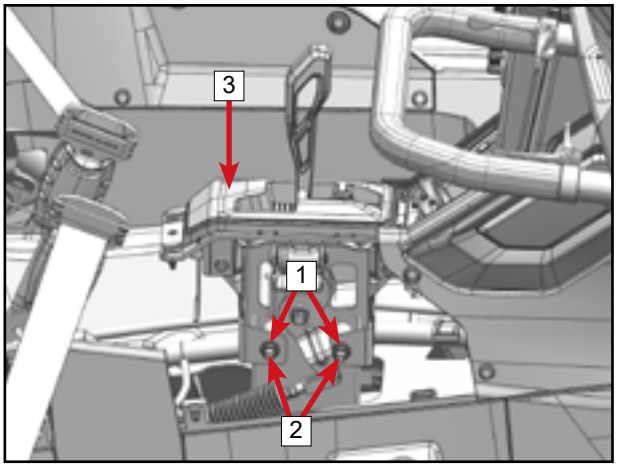

© CFMOTO Powersports, Inc. This manual is subject to all applicable copyright laws. Reproduction or duplication in any form, whole or in part, is strictly prohibited.

4.6.3 Shifter Mechanism Disassembly / Reassembly

Remove bolts [1].
Remove shift limit guard assembly [2].

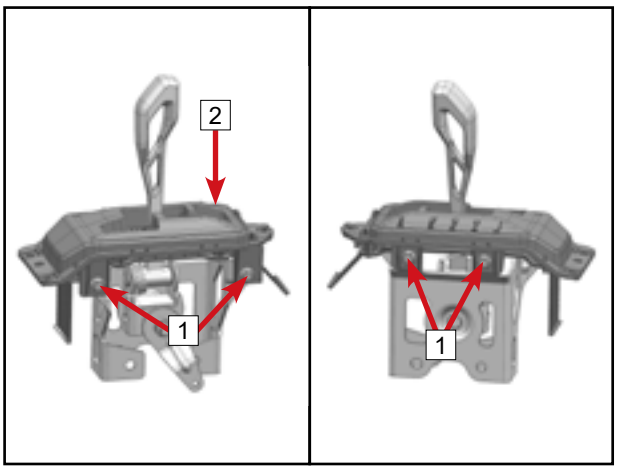

Remove bolt [1].
Remove washer [2].
Remove bushing [3], shift lever assembly [4] and bushing [3] from shift limit guard bracket assembly [5].

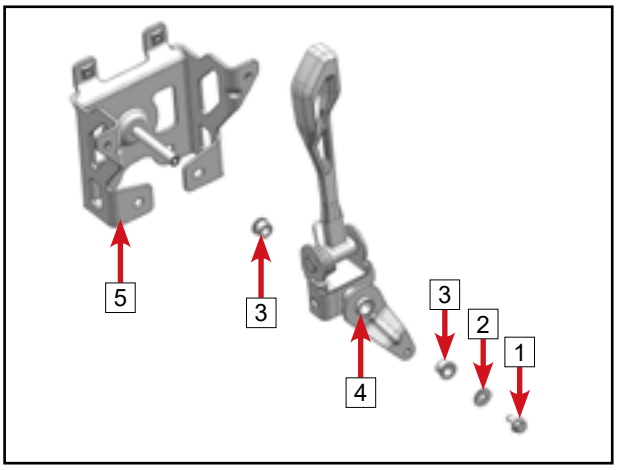

Remove circlip [1].

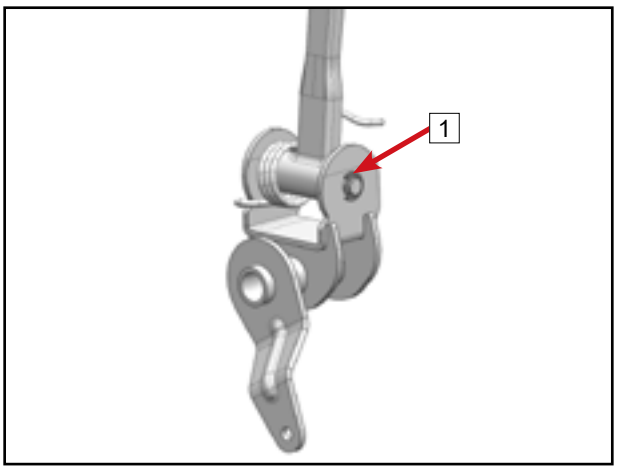

Remove pin shaft [1].
Remove shift swing arm assembly [2] and torsion spring [3].

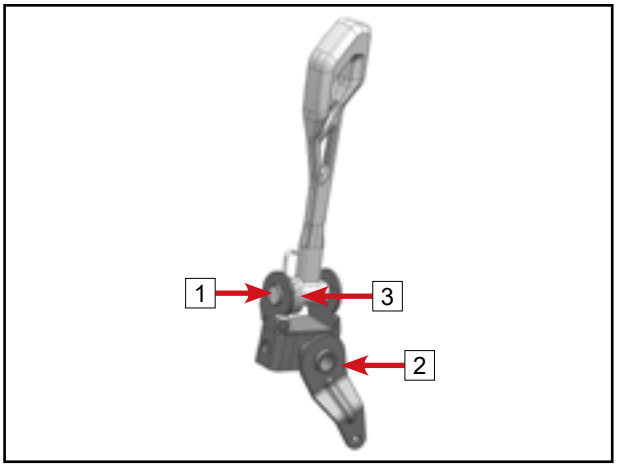

© CFMOTO Powersports, Inc. This manual is subject to all applicable copyright laws. Reproduction or duplication in any form, whole or in part, is strictly prohibited.

Remove nylon bushing [2] from shift lever [1].

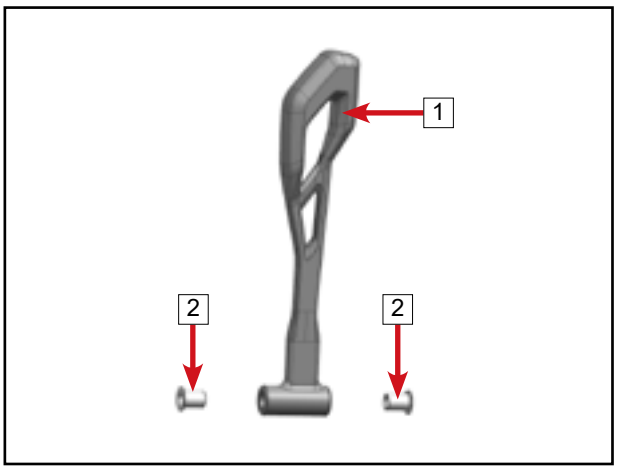

Remove the self-tapping screws [1], and separate the shift limit guard [2] from the shift limit guard [3].

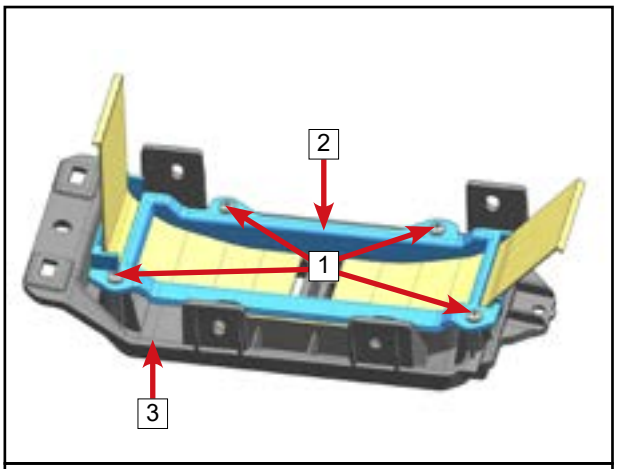

Seperate the shift deco plate [4] from the shift limit guard [2].

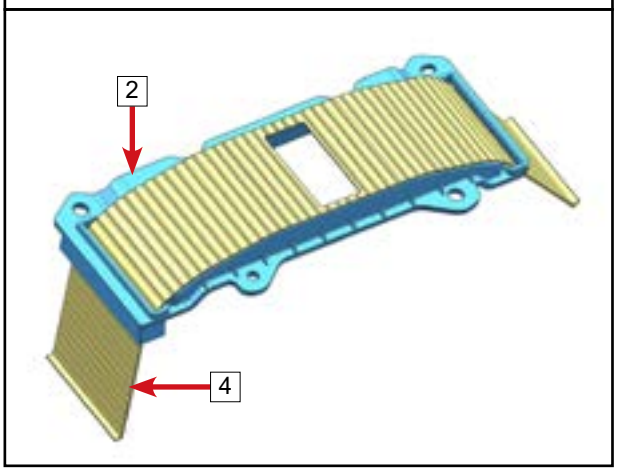

To assemble, perform the disassembly procedure in reverse. However, the following details should be noted:

- Before assembly, apply #2 lithium grease to the friction locations of the parts (including bushings, pins, etc.).
- The torsion spring is installed as shown at right, with the end [A] clicking into the groove of the shift swing arm assembly [2].

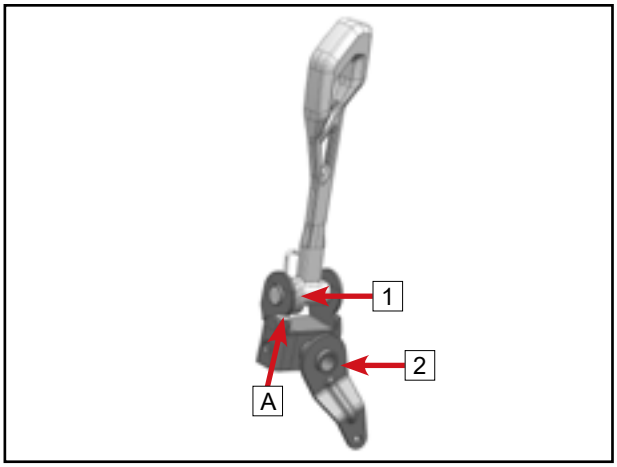

© CFMOTO Powersports, Inc. This manual is subject to all applicable copyright laws. Reproduction or duplication in any form, whole or in part, is strictly prohibited.

Shifter Mechanism Inspection

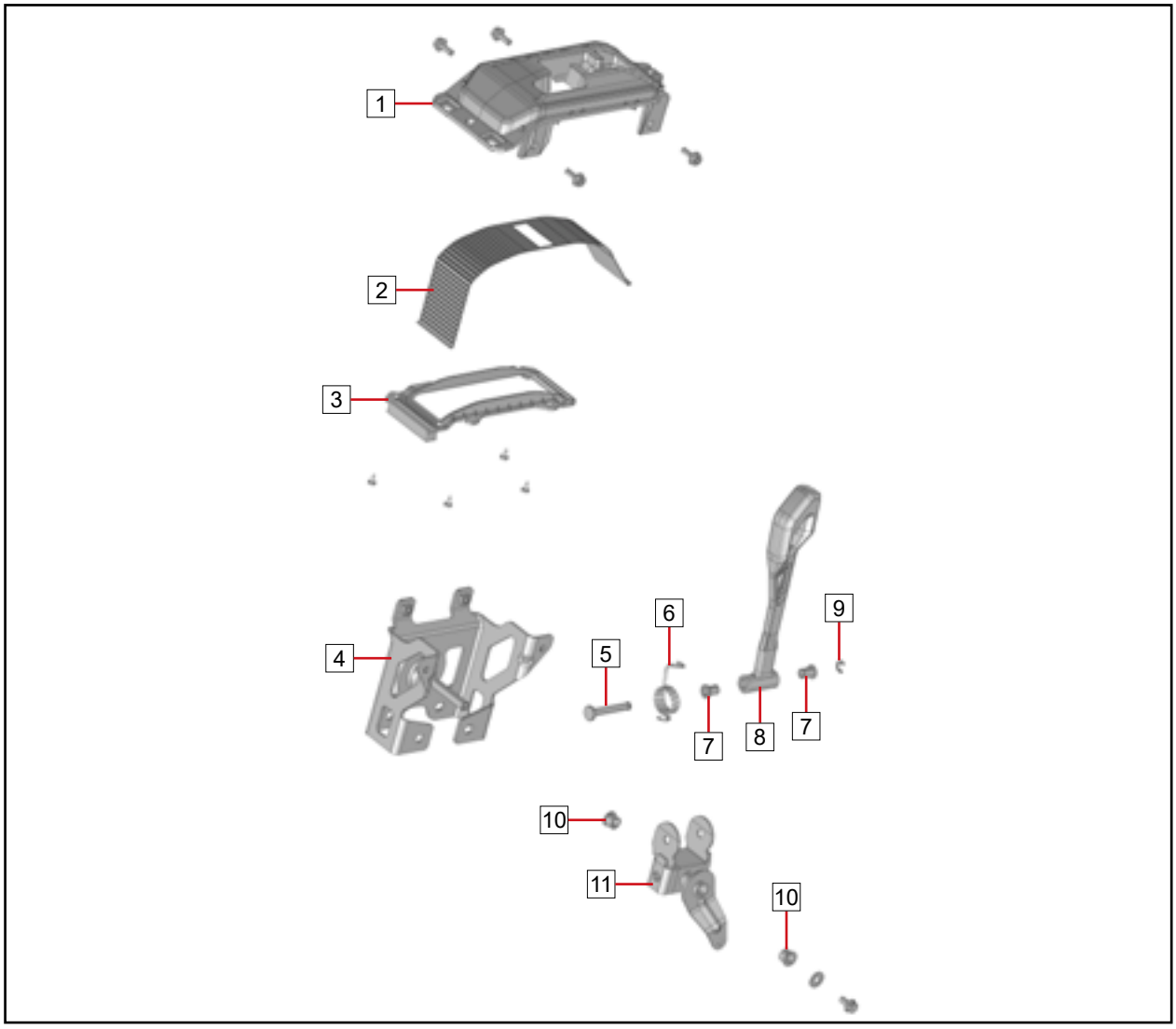

Check whether the shift deco plate 2 is severely worn or damaged.

Inspect the shift limit guard 1, shift limit guard 2 3, shift limit guard bracket assembly 4, shift swing arm assembly 11 and shift lever 8 for cracks, severe wear, or other damage. Inspect the pin shaft 5, nylon bushings 7 and bushing 10 for severe wear, or other damage.

Inspect torsion spring 6 for cracks, severe deformation or damage.

Replace abnormal or damaged parts.

Use a new circlip 9 any time the shifter is disassembled.

4.6.4 Shift Mechanism Reassembly

To reassemble, perform the disassembly procedure in reverse. However, the following details should be noted:

— To adjust the shift cable, refer to the Shift Cable Adjustment section.

— Test the shift lever function properly in all gear positions.

© CFMOTO Powersports, Inc. This manual is subject to all applicable copyright laws. Reproduction or duplication in any form, whole or in part, is strictly prohibited.

5.1 Special Tools 05-5
5.2 Engine Removal 05-6
5.3 Engine Overhaul 05-20
5.3.1 Engine Oil and Gear Oil Drain 05-20
5.3.2 CVT Case Removal 05-21
5.3.3 Gearbox Removal 05-22
5.3.4 Dipstick Tube Removal 05-23
5.3.5 Turbocharger Removal 05-23
5.3.6 Oil Cooler Water Outlet Hose Removal 05-27
5.3.7 Thermostat Outlet Pipe Removal 05-28
5.3.8 Circulation Return Pipe Removal 05-28
5.3.9 Thermostat Seat and Thermostat Removal 05-28
5.3.10 Oil Filter Removal 05-28
5.3.11 Oil Cooler Removal 05-29
5.3.12 Starter Motor Removal 05-29
5.3.13 Ignition Coil and Spark Plug Removal 05-29
5.3.14 Cylinder Head Cover Removal 05-30
5.3.15 Timing Chamber Cover Removal 05-30
5.3.16 Camshaft Assembly Removal 05-31
5.3.17 Cylinder Head Assembly Removal 05-34
5.3.18 Timing Chain Guide and Tension Plate Removal 05-35
5.3.19 Magneto End Cover Removal 05-36
5.3.20 Magneto Rotor Removal 05-36
5.3.21 Starter Dual Gear Removal 05-37
5.3.22 Idler Removal 05-37
5.3.23 Oil Pan Removal 05-37
5.3.24 Oil Pump Removal 05-38
5.3.25 Lower Crankcase Disassembly 05-39
5.3.26 Balance Shaft and Crankshaft Removal 05-41
5.3.27 Piston and Connecting Rod Removal 05-42

© CFMOTO Powersports, Inc. This manual is subject to all applicable copyright laws. Reproduction or duplication in any form, whole or in part, is strictly prohbited.

5.4 Engine Parts Inspection..... 05-44
5.4.1 Crankshaft and Balance Shaft Bearing Radial Clearance 05-44
5.4.2 Selecting Crankshaft Bearings and Balance Shaft Bearings 05-47
5.4.2.1 Plain Bearing Section Table..... 05-52
5.4.3 Crankshaft and Balance Shaft Plain Bearing Replacement..... 05-53
5.4.4 Lower Crankcase Inspection 05-54
5.4.5 Cylinder Body Inspection..... 05-54
5.4.6 Oil Pan Inspection..... 05-58
5.4.7 CVT Case Inspection 05-58
5.4.8 Magneto End Cover Disassembly/Reassembly 05-58
5.4.9 Cylinder Head Cover Disassembly/Reassembly..... 05-66
5.4.10 Cylinder Head 05-68
5.4.10.1 Cylinder Head Disassembly..... 05-68
5.4.10.2 Cylinder Head Inspection..... 05-70
5.4.10.3 Cylinder Head Reassembly..... 05-74
5.4.11 Cylinder Body Inspection/Measurement..... 05-80
5.4.12 Piston Inspection/Measurement..... 05-81
5.4.13 Timing Assembly Inspection..... 05-85
5.4.14 Crankshaft and Connecting Rod Inspection 05-88
5.4.15 Oil Pump Assembly Inspection..... 05-93
5.4.16 Electric Starter Drive Inspection..... 05-99
5.4.16.1 Overriding Clutch Assembly..... 05-100
5.4.17 Thermostat Inspection..... 05-100
5.4.18 Oil Cooler Inspection 05-103
5.4.19 Water Hose Inspection..... 05-103
5.5 Engine Reassembly..... 05-105
5.5.1 Piston and Connecting Rod Installation 05-105
5.5.2 Crankshaft and Balance Shaft Installation 05-107
5.5.3 Lower Crankcase Installation 05-109
5.5.4 Oil Pump Assembly Installation.....05-113
5.5.5 Oil Pan Installation.....05-114
5.5.6 Timing Chain Guide and Tension Plate Installation.....05-115

© CFMOTO Powersports, Inc. This manual is subject to all applicable copyright laws. Reproduction or duplication in any form, whole or in part, is strictly prohibited.

5.5.7 Cylinder Head Assembly Installation 05-116
5.5.8 Camshaft Installation 05-118
5.5.9 Timing Chamber Cover Installation 05-122
5.5.10 Cylinder Head Cover Assembly Installation 05-123
5.5.11 Spark Plug and Ignition Coil Installation 05-124
5.5.12 Idle Gear Installation 05-124
5.5.13 Starter Dual Gear Installation 05-125
5.5.14 Magneto Rotor Installation 05-125
5.5.15 Magneto End Cover Installation 05-127
5.5.16 Starter Motor Installation 05-129
5.5.17 Oil Cooler Installation 05-129
5.5.18 Oil Filter Installation 05-129
5.5.19 Thermostat Housing Installation 05-130
5.5.20 Circulation Return Pipe Installation 05-130
5.5.21 Thermostat Outlet Pipe Installation 05-131
5.5.22 Oil Cooler Outlet Tube Installation 05-132
5.5.23 Turbocharger Installation 05-133
5.5.24 Dipstick Tube Installation 05-137
5.5.25 Gearbox Installation 05-137
5.5.26 CVT Case Installation 05-139
5.5.27 Drain Bolt Installation 05-139
5.5.28 Dipstick and Fill Plug Installation 05-140
5.6 Intake Manifold Installation 05-141
5.7 Engine Coolant/Oil Heat Exchanger 05-158
5.8 Engine Lubrication System 05-160
5.8.1 Lubrication System View 05-160
5.8.2 Engine Oil Level Inspection 05-161
5.8.3 Engine Oil Replacement 05-161
5.8.4 Gear Oil Level Inspection 05-162
5.8.5 Gear Oil Replacement 05-163

© CFMOTO Powersports, Inc. This manual is subject to all applicable copyright laws. Reproduction or duplication in any form, whole or in part, is strictly prohbited.

5.8.6 Engine Oil Pressure Inspection 05-164
5.9 Air Intake System 05-165
5.9.1 Air Filter Element Maintenance 05-165
5.9.2 Air Filter Housing Assembly 05-167
5.9.2.1 Removal 05-167
5.9.2.2 Inspection 05-172
5.9.2.3 Installation 05-173
5.9.3 Intake Manifold 05-180
5.9.3.1 Intake Manifold Removal 05-180
5.9.3.2 Intake Manifold Disassembly 05-182
5.9.3.3 Inspection and Maintenance 05-184
5.9.3.4 Intake Manifold Reassembly 05-185
5.9.3.5 Intake Manifold Installation 05-186
5.10 Exhaust System 05-189
5.10.1 Removal 05-189
5.10.2 Inspection 05-192
5.10.3 Reassembly 05-193
5.11 Turbocharger and Intercooler System 05-196
5.11.1 Exploded View 05-196
5.11.2 Overview 05-199
5.11.3 Maintenance 05-201
5.11.4 Troubleshooting 05-202
5.11.5 Turbocharger Inspection 05-205

© CFMOTO Powersports, Inc. This manual is subject to all applicable copyright laws. Reproduction or duplication in any form, whole or in part, is strictly prohibited.

5.1 Special Tools

The following special tools are required for engine overhaul / diagnostics:

Magneto Rotor Removal Tool	
0NYK-031000-922-002	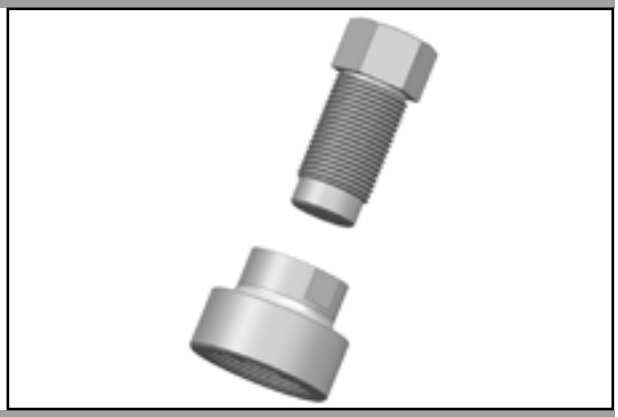
Magneto Rotor Stopper	
0NYK-031000-922-001	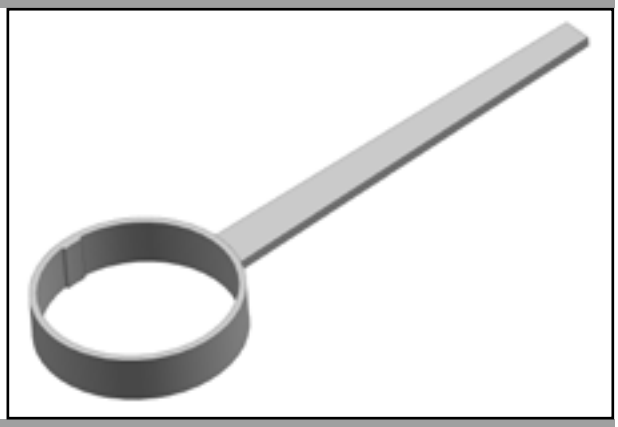
Case Oil Hole Connector (for Testing oil pressure)	
0SQ0-000000-922-014	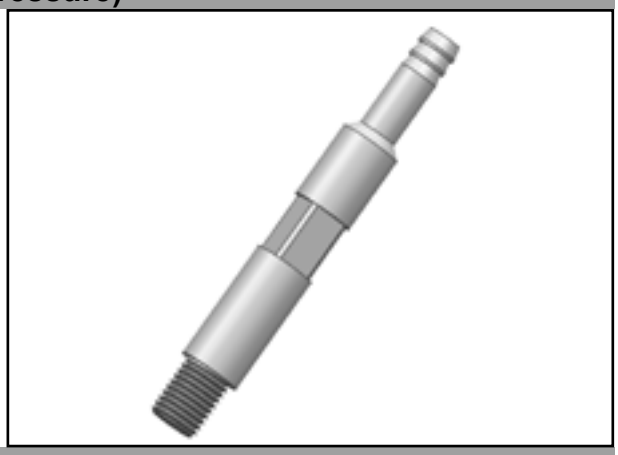

© CFMOTO Powersports, Inc. This manual is subject to all applicable copyright laws. Reproduction or duplication in any form, whole or in part, is strictly prohbited.

5.2 Engine Removal

Engine Removal

Refer to the relevant sections of the service manual to remove:
— Seat
— Middle / Rear body covering parts
— CVT inlet/outlet pipe
— Air filter inlet pipe
— Rear shock absorber, rear LH/RH swing arms and rear CV shafts

Place a suitable container under the water pump to collect the coolant.
Loosen the clamp 1.
Disconnect the engine inlet pipe 2 from the water pump cover and drain the coolant completely.

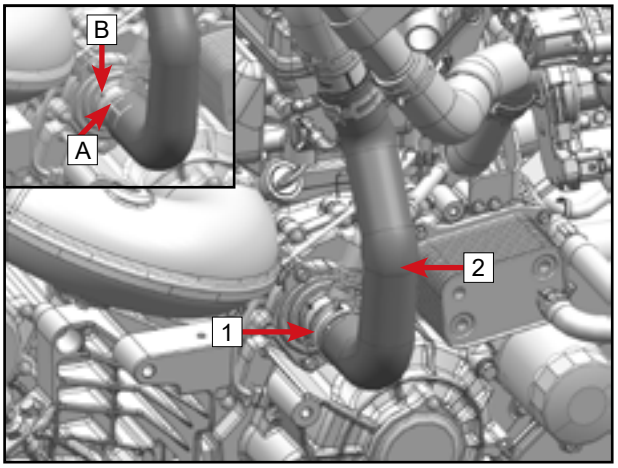

Separate the wire harness tie 1 from the CVT air inlet pipe.
Loosen the clamp 2.
Remove bolt 3.
Remove CVT air inlet pipe assembly 4.

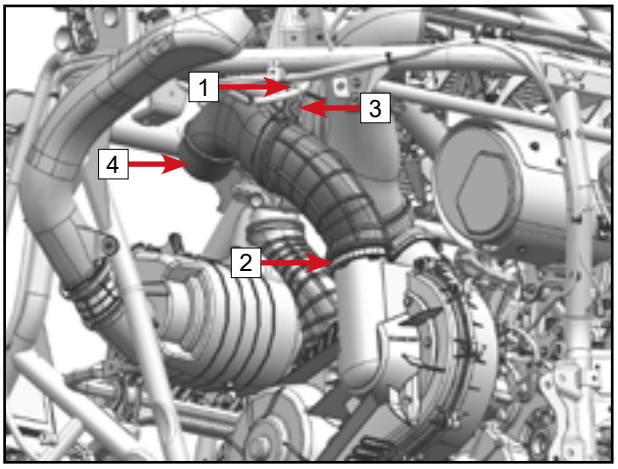

Loosen the clamp 1.
Remove bolt 2.
Remove CVT air outlet pipe assembly 3.

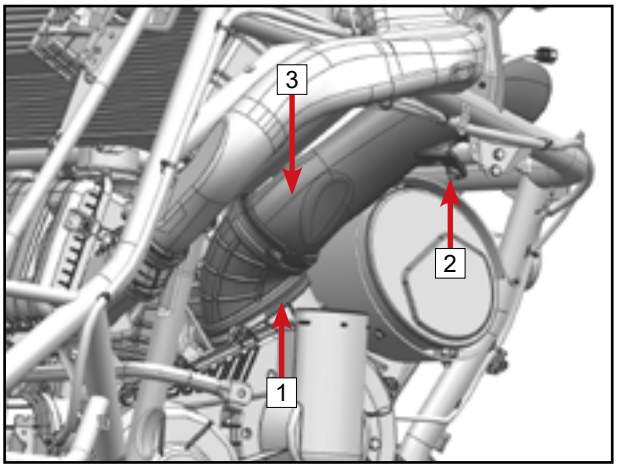

© CFMOTO Powersports, Inc. This manual is subject to all applicable copyright laws. Reproduction or duplication in any form, whole or in part, is strictly prohibited.

Loosen the clamp [1], remove CVT front air outlet pipe assembly [2].

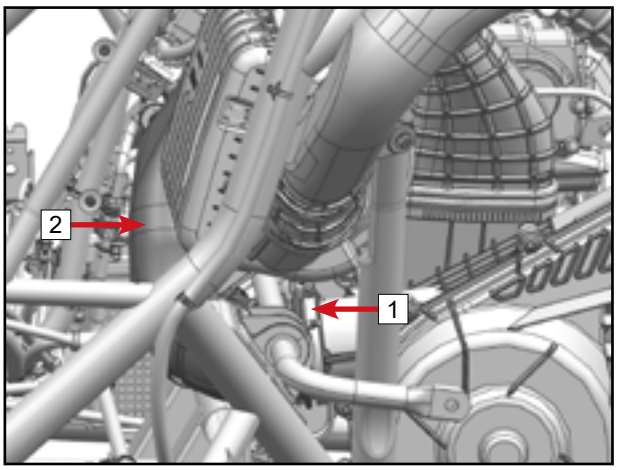

Loosen the clamp [1], remove CVT front air inlet pipe [2].

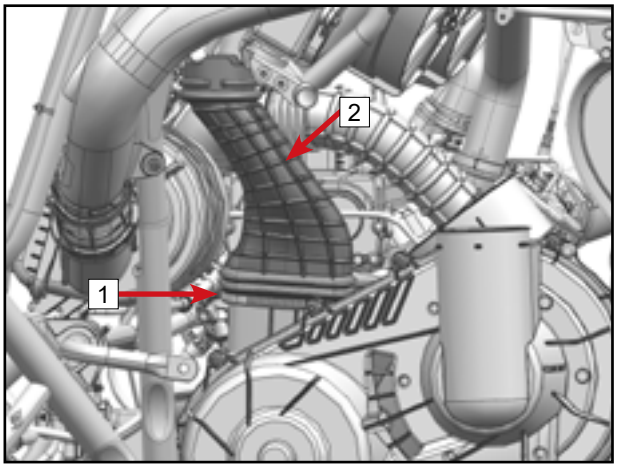

Loosen the clamp [1].
Remove bolt [2] and [3].
Remove air filter air inlet pipe assembly [4].

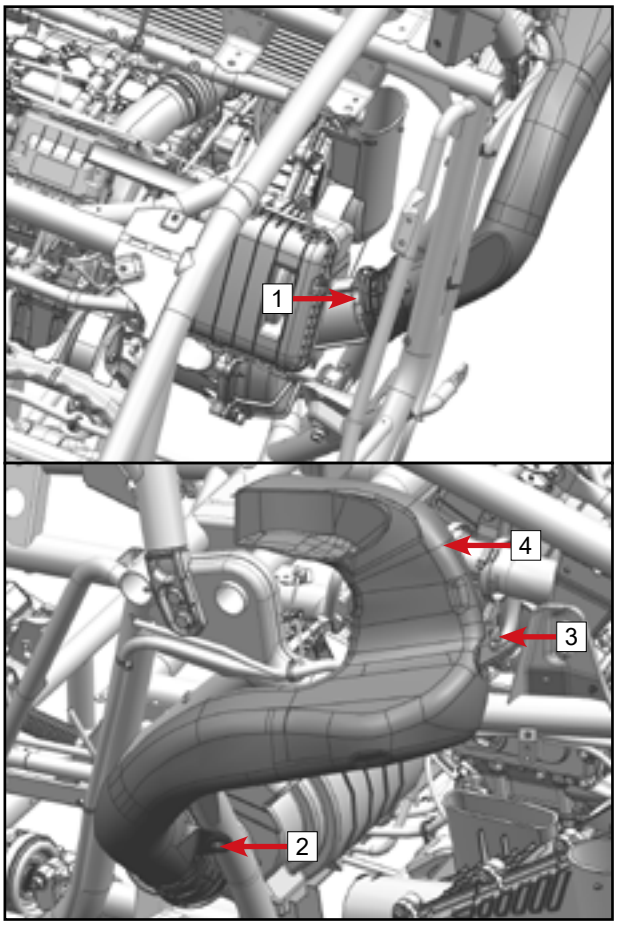

© CFMOTO Powersports, Inc. This manual is subject to all applicable copyright laws. Reproduction or duplication in any form, whole or in part, is strictly prohibited.

Loosen the clamp 1.
Unplug the air intake relief valve outlet hose 2 from the air filter outlet tube 1.
Separate the hose 2 from the clamp 3.
Remove the bolt 4 and separate the hose 2 from the bracket.

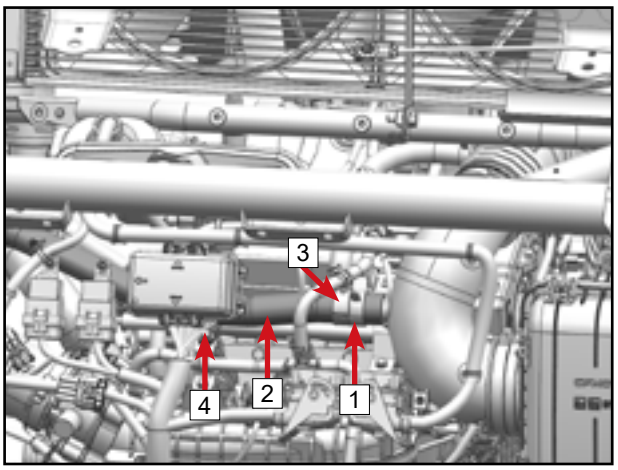

Separate the tie band 1 from the intercooler air outlet tube.
Disconnect the boost pressure temperature sensor connector 2.

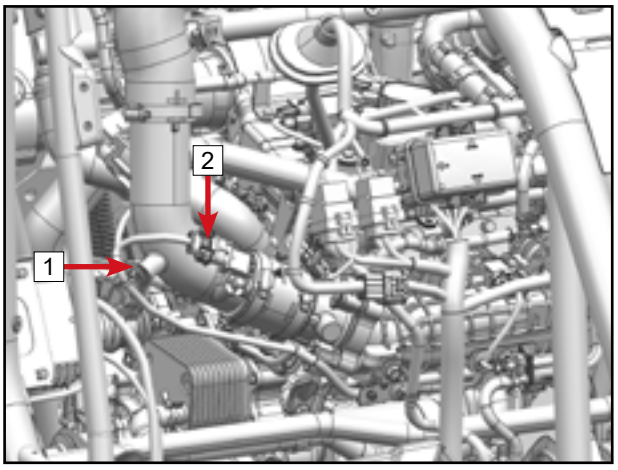

Separate the tie band 1 from the intercooler air outlet tube.
Disconnect the intake pressure relief valve connector 2.

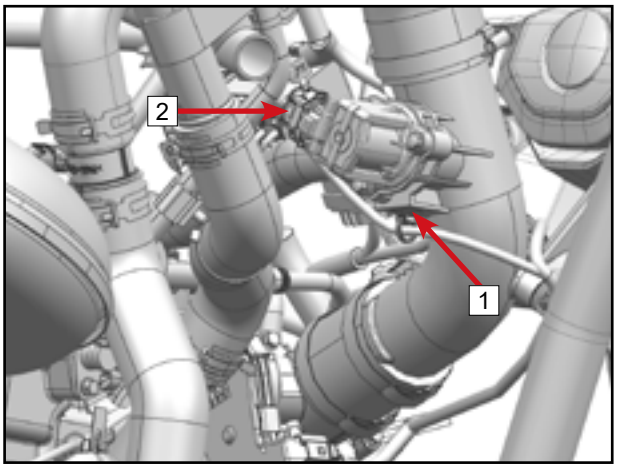

Loosen the clamp 1.
Unplug the connecting tube 2 from the throttle body.

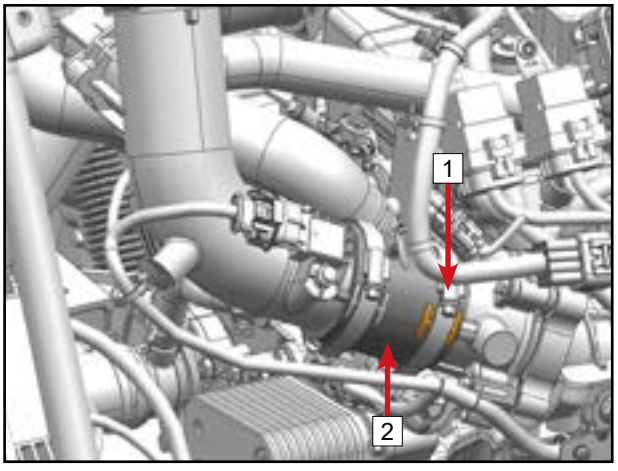

© CFMOTO Powersports, Inc. This manual is subject to all applicable copyright laws. Reproduction or duplication in any form, whole or in part, is strictly prohibited.

Loosen the clamp 1.
Unplug the intercooler intake hose 1 2 from the turbocharger.

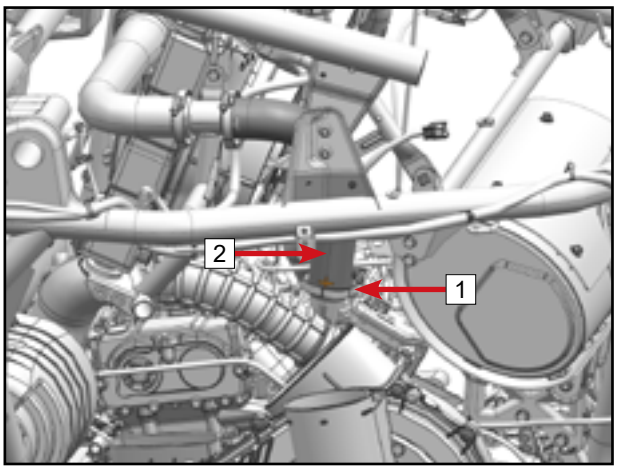

Loosen the clamp 1.
Unplug the coolant outlet pipe 2.

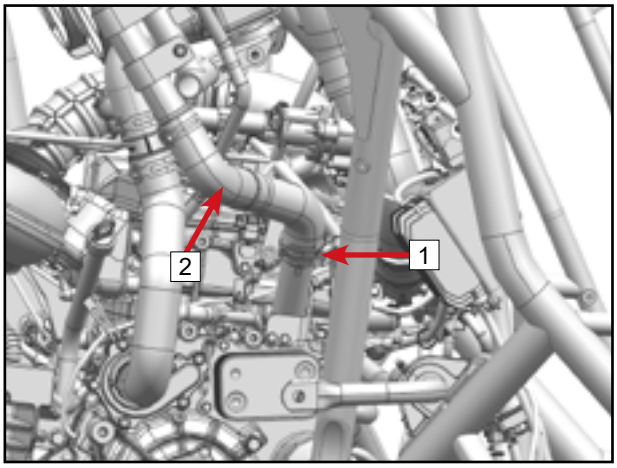

Loosen the clamp 1.
Unplug the coolant outlet pipe 2 of the turbocharger.

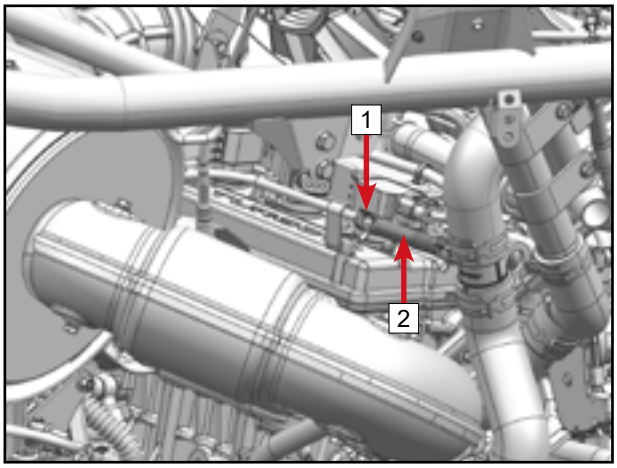

Loosen the clamp 1.
Unplug the coolant degassing tube 2.

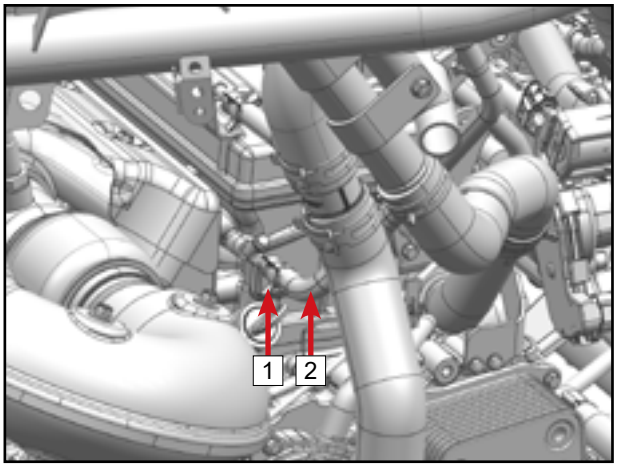

© CFMOTO Powersports, Inc. This manual is subject to all applicable copyright laws. Reproduction or duplication in any form, whole or in part, is strictly prohibited.

Unplug the radiator connector 1.
Separate all the relevant tie band 2 from the intercooler connecting bracket 3 and the intercooler reinforcing pipes 4.

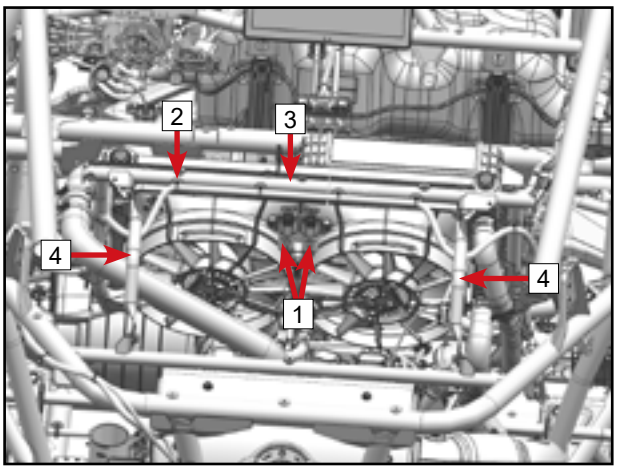

Remove the bolts 1, and separate the coolant expansion tank 2 from the frame.

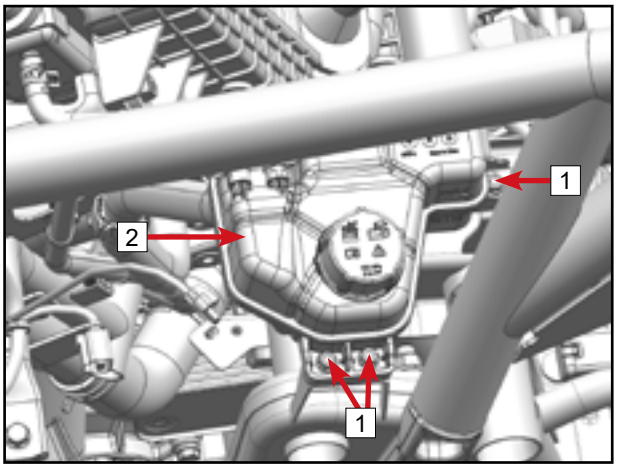

Remove bolts 1.
Remove the intercooler reinforcing pipe 2.

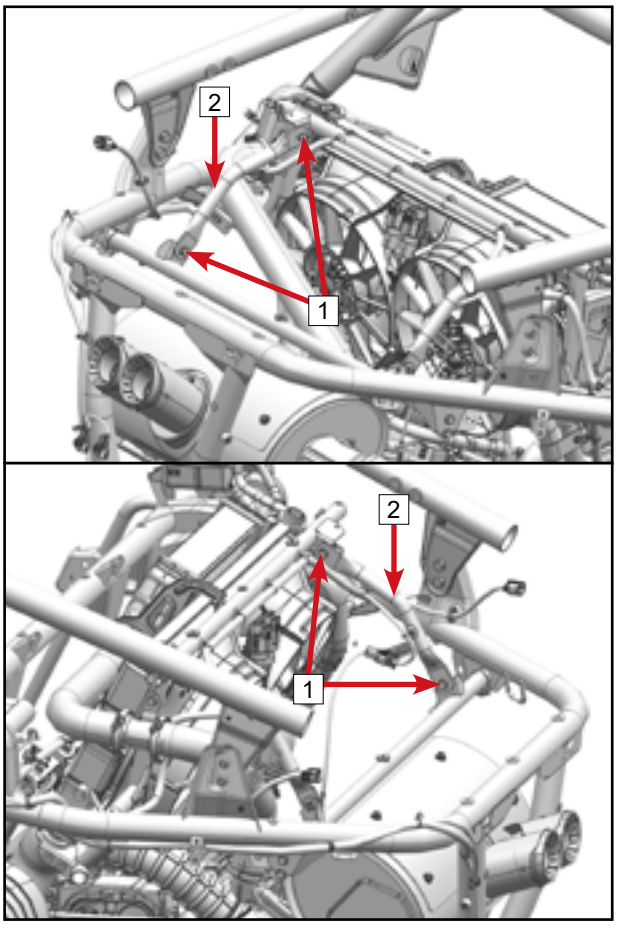

© CFMOTO Powersports, Inc. This manual is subject to all applicable copyright laws. Reproduction or duplication in any form, whole or in part, is strictly prohibited.

Cut off the tie band [1] and separate the wire harness from the bracket.
Remove bolts [2].
Remove intercooler connection bracket and cooling system [3].

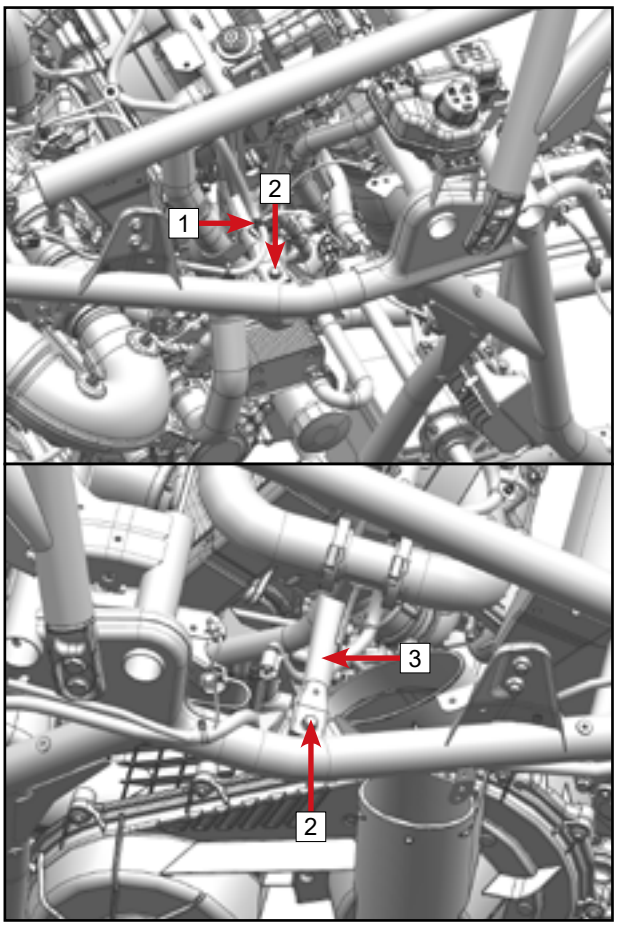

Loosen the clamp [1].
Unplug the hose [2] from the crankcase breather.

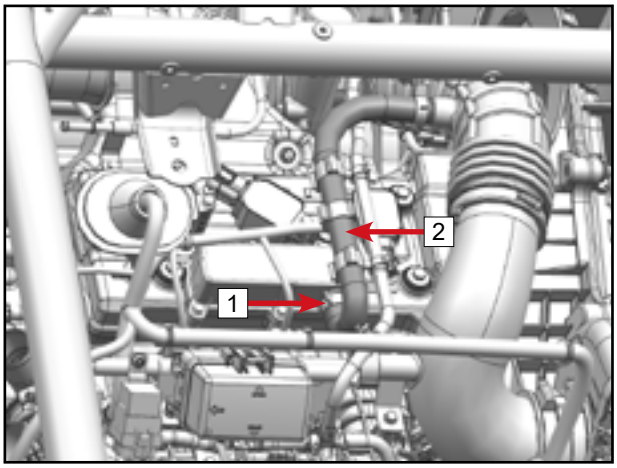

Loosen the clamp [1].
Unplug the connecting pipe [2].

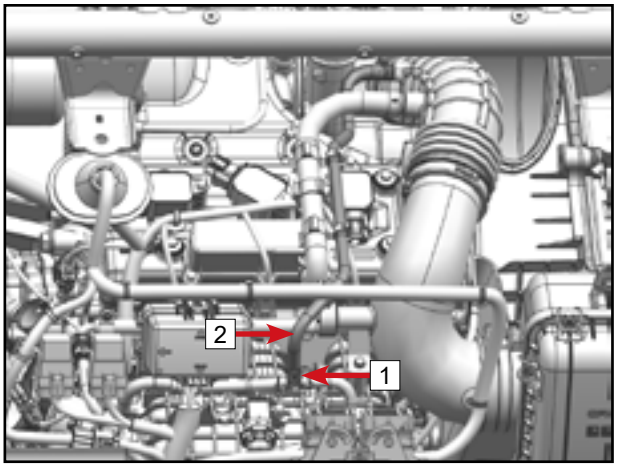

© CFMOTO Powersports, Inc. This manual is subject to all applicable copyright laws. Reproduction or duplication in any form, whole or in part, is strictly prohibited.

Loosen the clamp 1.
Unplug the air filter outlet tube 2 2 from the turbocharger.
Remove the air filter housing assembly.

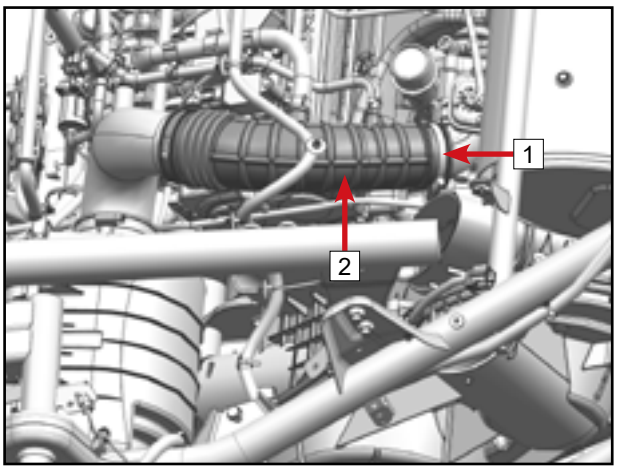

Remove bolts 1.
Remove rear cargo box bracket assembly 2.

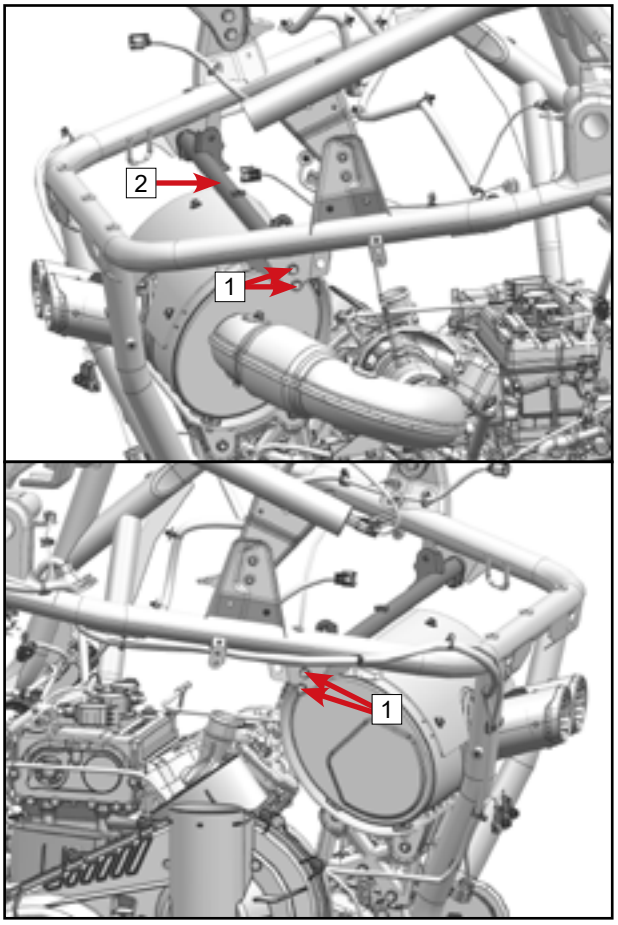

Disconnect the oxygen sensor connector.
Loosen the clamp 1.

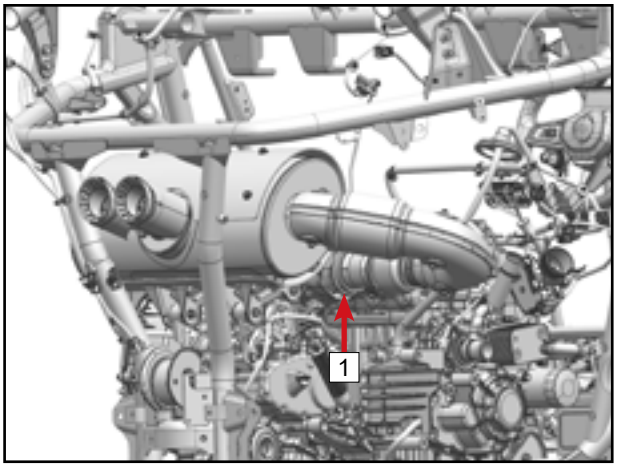

© CFMOTO Powersports, Inc. This manual is subject to all applicable copyright laws. Reproduction or duplication in any form, whole or in part, is strictly prohibited.

Remove bolts [1] and its lock nuts.
Remove exhaust system [2].

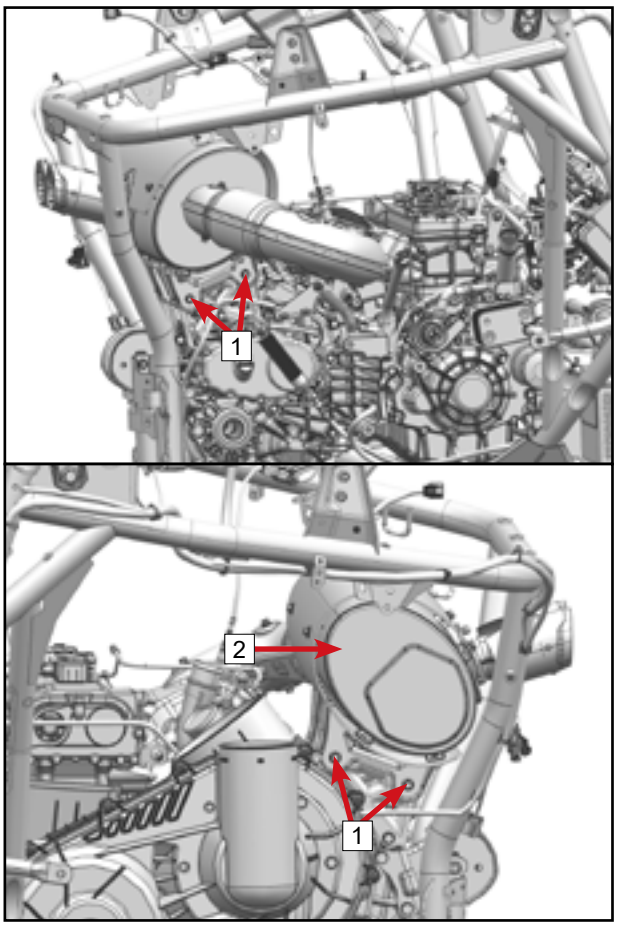

Remove and discard flange gasket [1].

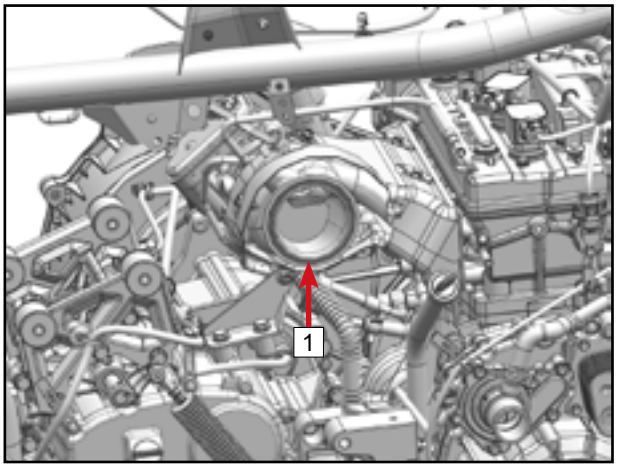

Remove bolt [1].
Separate the p-clamp [2] from the engine.

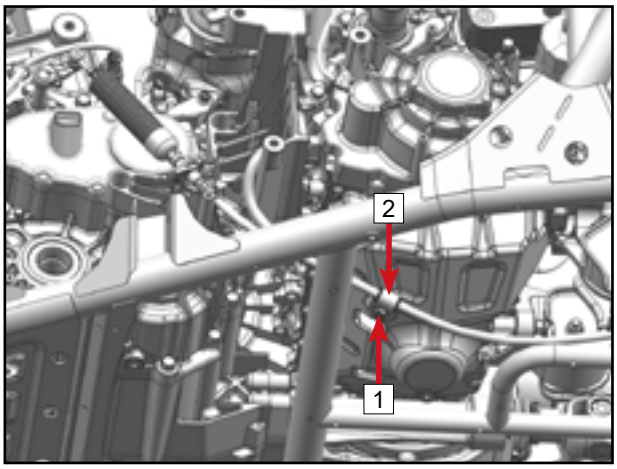

© CFMOTO Powersports, Inc. This manual is subject to all applicable copyright laws. Reproduction or duplication in any form, whole or in part, is strictly prohibited.

Remove bolt [1].
Remove bolt [2].
Remove gearshift swing arm assembly [3] and hang it to the side.

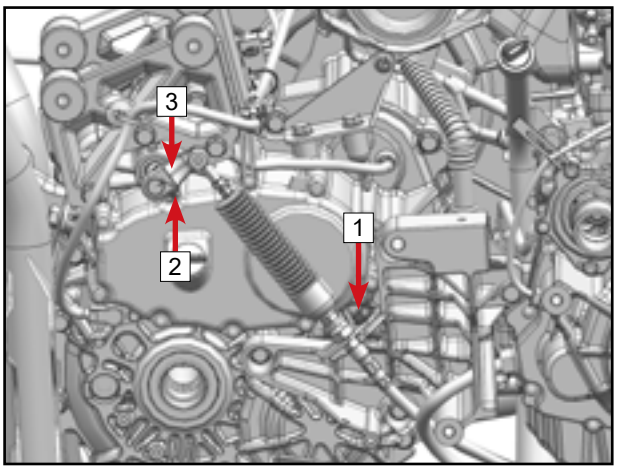

Loosen the clamp [1].
Unplug breather hose [2] from gearbox.

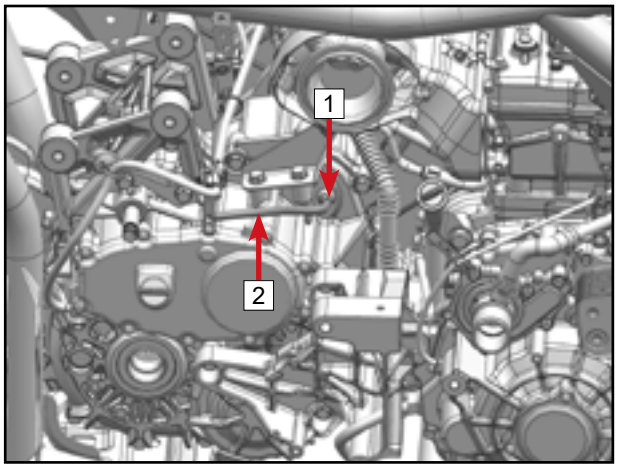

Disconnect speedometer sensor connector [1] .
Separate the tie band [2] from the bracket [3].

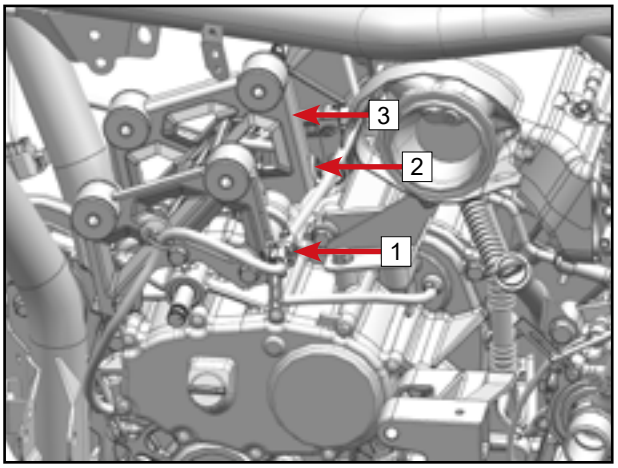

Disconnect gear sensor connector [1].
Separate the tie band [2] from the CVT case.
Disconnect turbocharger connector [3].
Separate the tie band [4] from the CVT case.

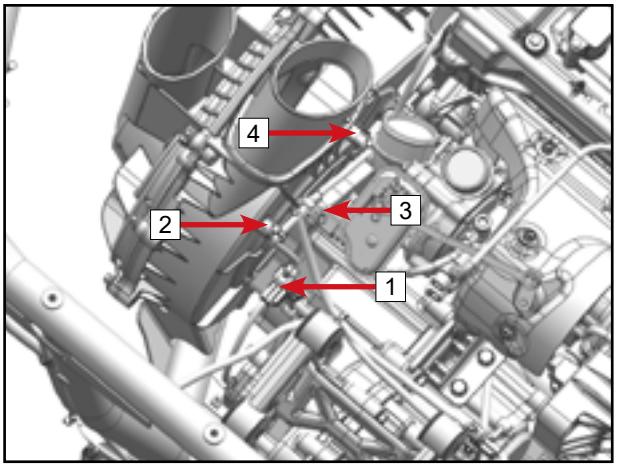

© CFMOTO Powersports, Inc. This manual is subject to all applicable copyright laws. Reproduction or duplication in any form, whole or in part, is strictly prohibited.

Disconnect magneto stator connector [1].
Separate the tie band [2] from the frame.

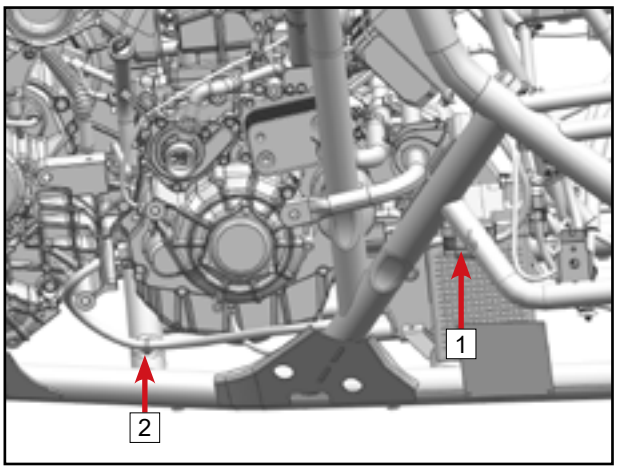

Disconnect fuel injector connectors [1].
Disconnect ignition coil connectors [2].
Separate the tie band [3] and [4] from the bracket.

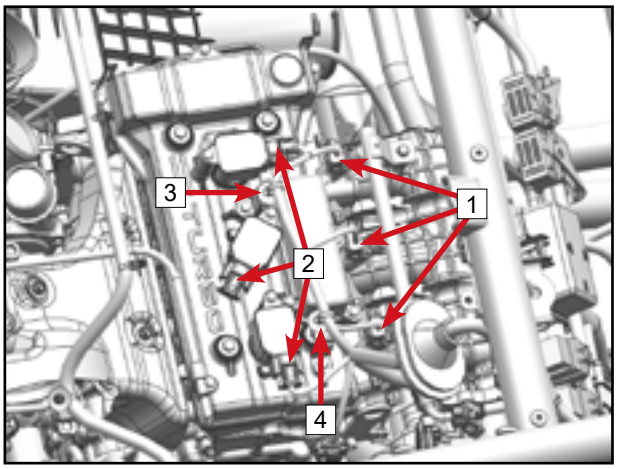

Separate the tie band [1] from the intake manifold.
Disconnect the camshaft position sensor connector [2].
Disconnect the throttle body connector [3].
Disconnect the crankshaft position sensor connector.

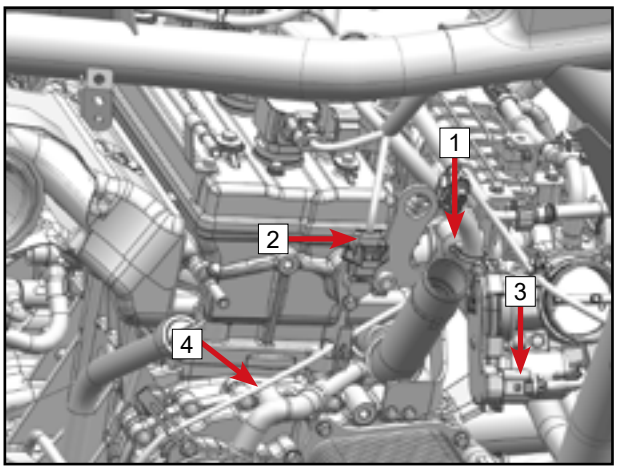

Loosen the clamp [1].
Unplug the pipe [2] from the intake manifold.
Separate the tie band [3] from the bracket.

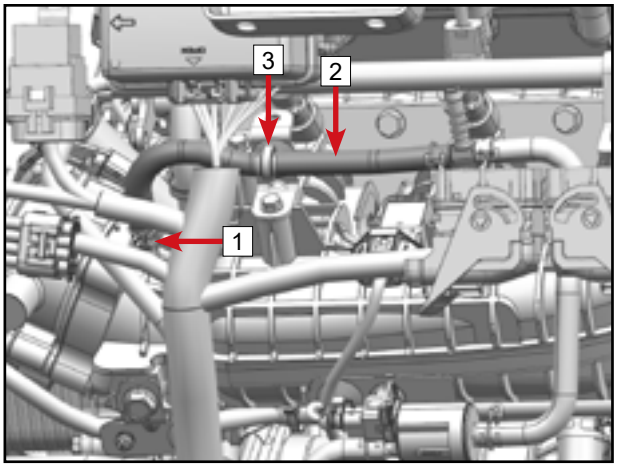

© CFMOTO Powersports, Inc. This manual is subject to all applicable copyright laws. Reproduction or duplication in any form, whole or in part, is strictly prohibited.

Disconnect the EVAP canister magnetic valve connector [1].
Unplug the EVAP canister magnetic valve [2] from the bracket.
Disconnect the boost pressure temperature sensor connector [3].
Separate the tie band [4] from the bracket.
Remove fuel pipe [5] from fuel rail.
Separate the tie band [6] and [7] from the bracket.
Separate the tie band [8] and [9] from the intake manifold.

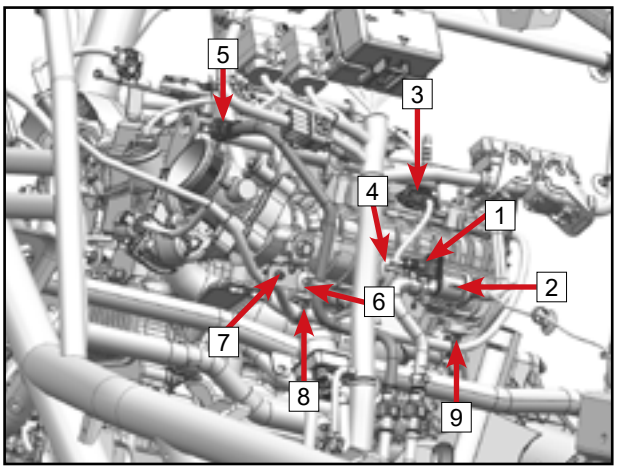

Disconnect the oil pressure sensor connector [1].
Disconnect the coolant temperature sensor connector [2].
Disconnect the knock sensor connector [3].

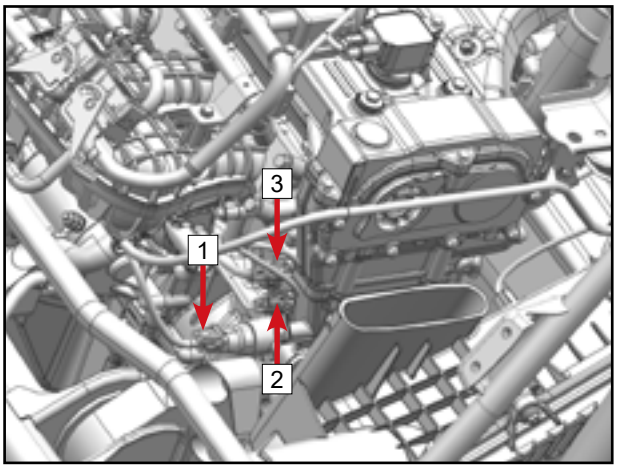

Remove nut [1].
Remove the positive terminal wire [2] of starter motor and hang it aside.

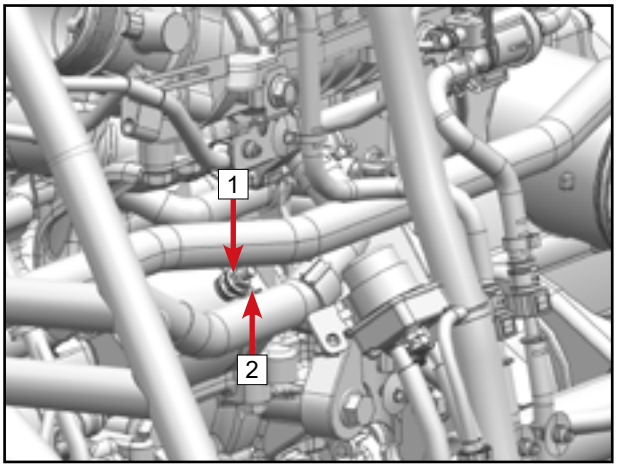

Remove bolt [1].
Remove the engine ground wire [2] and hang it aside.
Reinstall the bolt [1] to its original position.

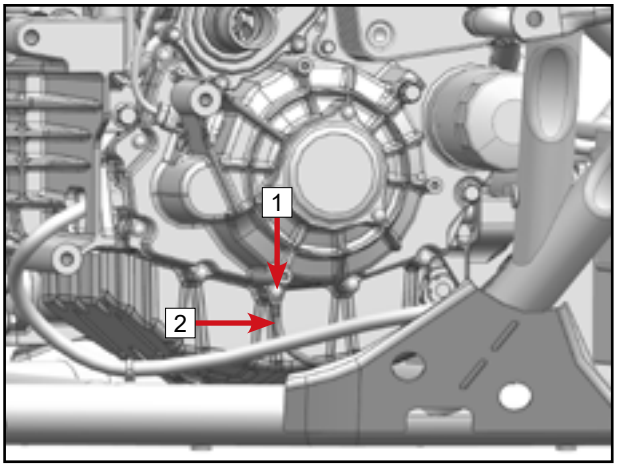

© CFMOTO Powersports, Inc. This manual is subject to all applicable copyright laws. Reproduction or duplication in any form, whole or in part, is strictly prohibited.

Remove front drive shaft [1]. (Refer to Powertrain section)

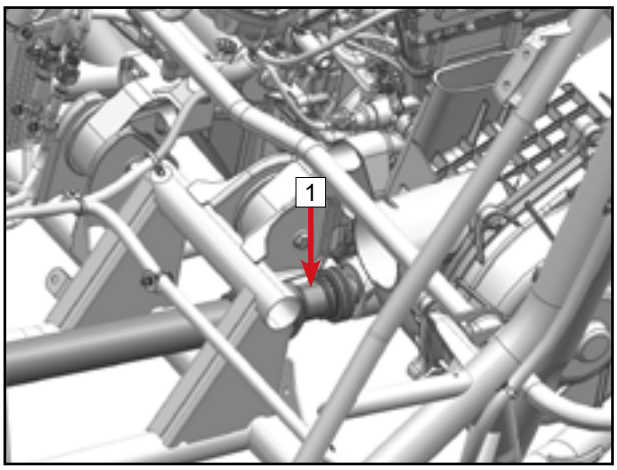

Remove the bolt [1] and locking nut securing the LH front motor mount to the frame.

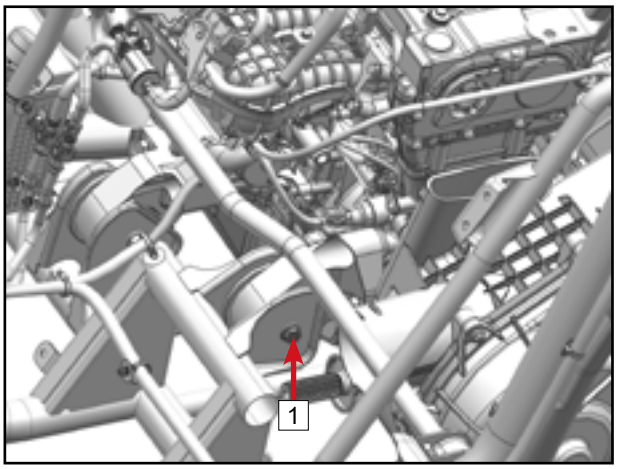

Remove the bolt [1] and locking nut securing the RH front motor mount to the frame.

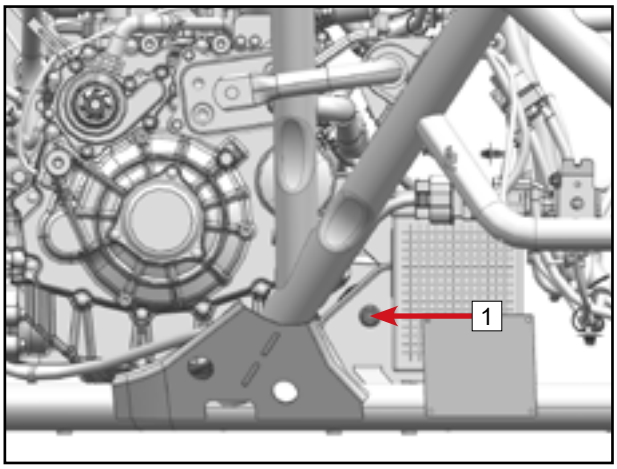

Remove the bolt [1] and locking nut securing the rear motor mount to the frame.

Carefully remove the engine from the vehicle using a suitable lifting device.

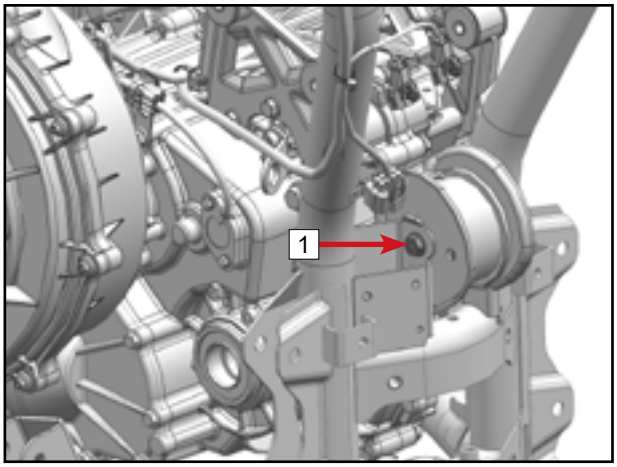

© CFMOTO Powersports, Inc. This manual is subject to all applicable copyright laws. Reproduction or duplication in any form, whole or in part, is strictly prohibited.

Motor Mount Removal

Remove bolts [1].
Remove LH front motor mount [2].
Remove bolts [3]
Remove RH front motor mount [4].

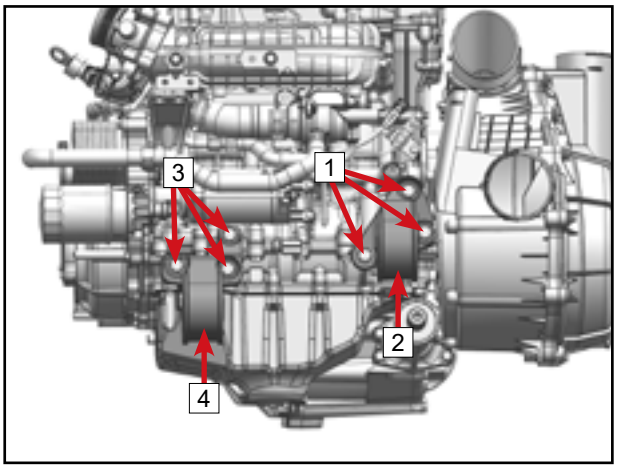

Remove bolts [1].
Remove rear motor mount [2].

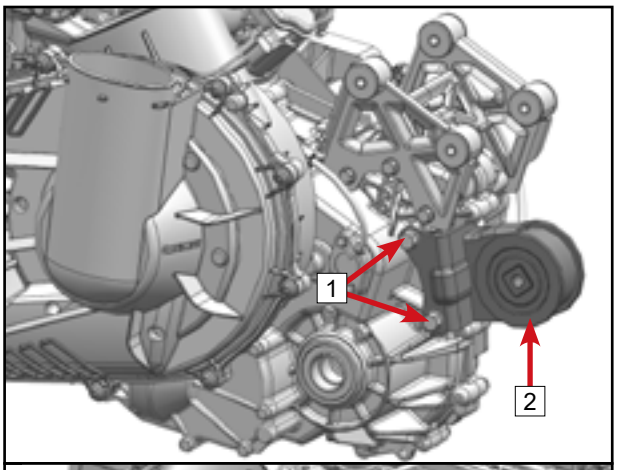

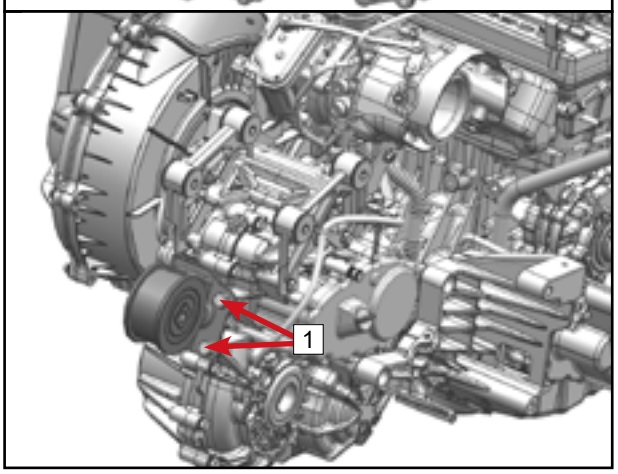

Transmission Support Bracket Removal

Separate the plug [1] and tie band [2] from the bracket [3].

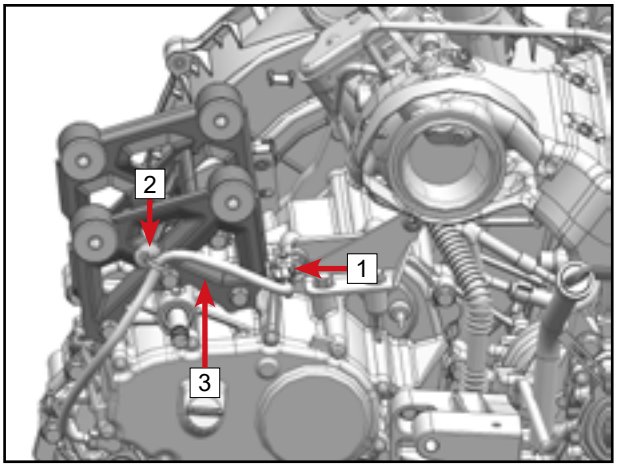

© CFMOTO Powersports, Inc. This manual is subject to all applicable copyright laws. Reproduction or duplication in any form, whole or in part, is strictly prohibited.

Remove bolts [1].
Remove transmission support bracket [2].

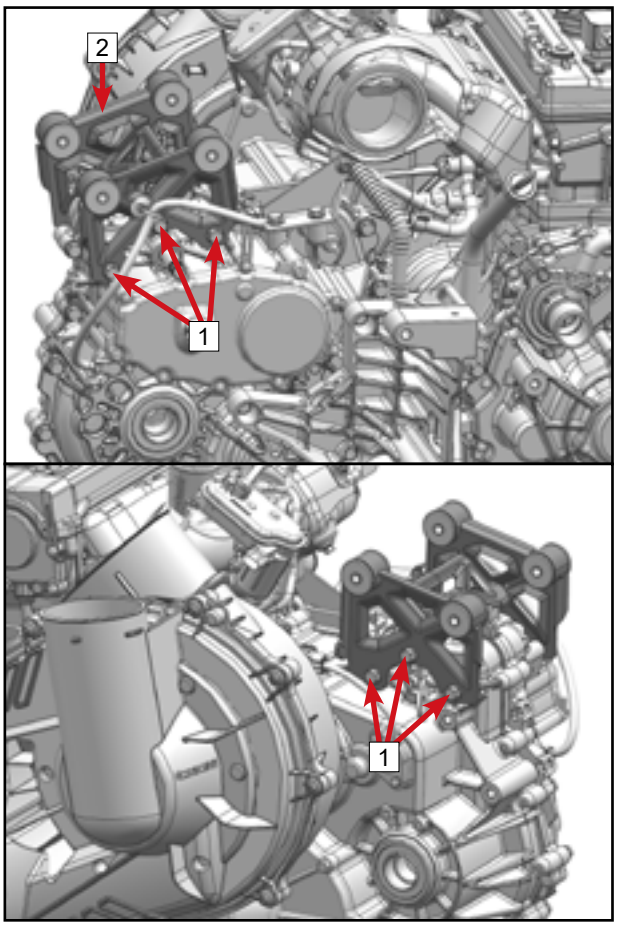

Air Inlet Manifold Removal
Remove bolts [1].
Remove air inlet manifold bracket [2].

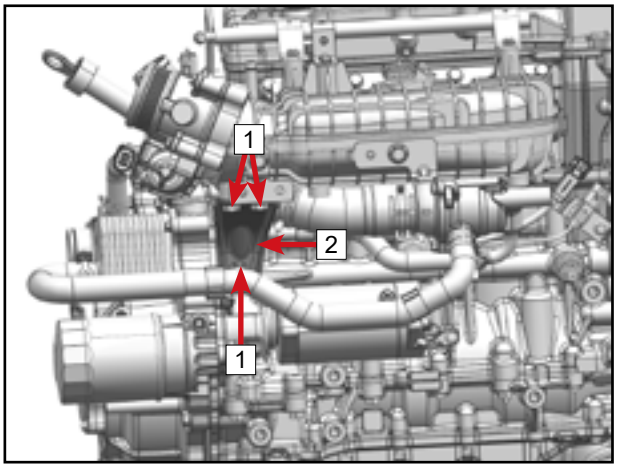

Remove bolts [1].
Remove air inlet manifold [2] and seal ring.

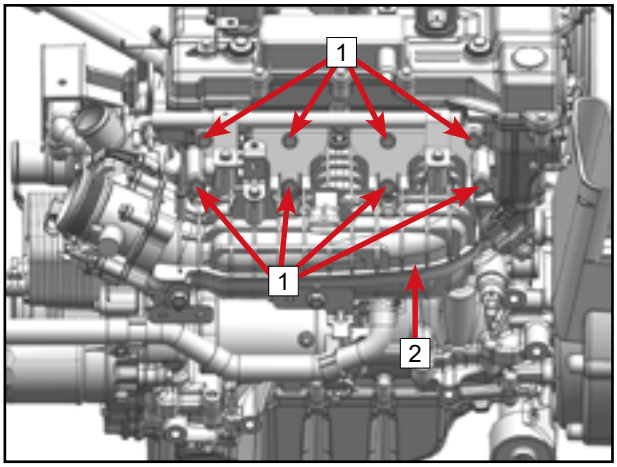

© CFMOTO Powersports, Inc. This manual is subject to all applicable copyright laws. Reproduction or duplication in any form, whole or in part, is strictly prohibited.

5.3 Engine Overhaul

(Transmission - Refer to Chapter 04)

NOTE
Secure the engine on a work bench to prevent the engine from falling and causing injury or damage.

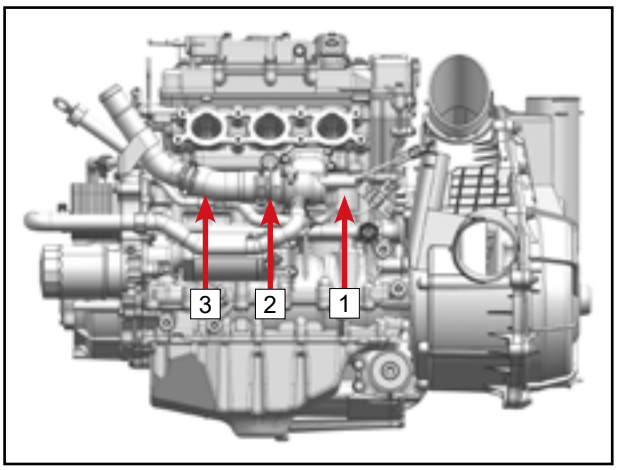

NOTE: The position of each cylinder is shown on the right.

1: Cylinder 1 (CVT side)
2: Cylinder 2
3: Cylinder 3 (Magneto side)

5.3.1 Engine Oil and Gear Oil Drain

Engine Oil

Remove oil dipstick 1.

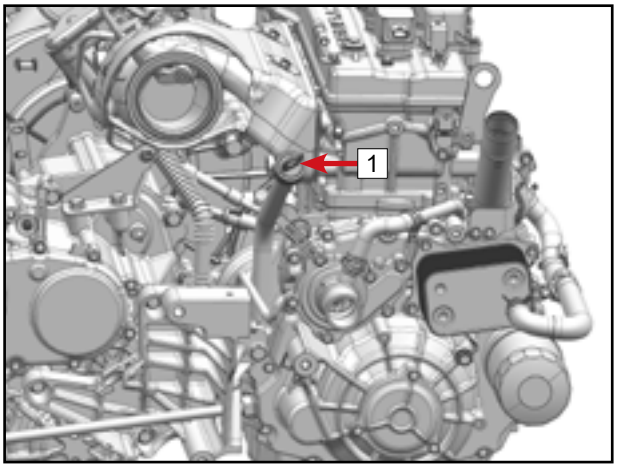

Place a container under the engine drain bolt to catch the drained oil.

Remove the drain bolt 1 and washer 2. Allow the engine oil to drain completely.

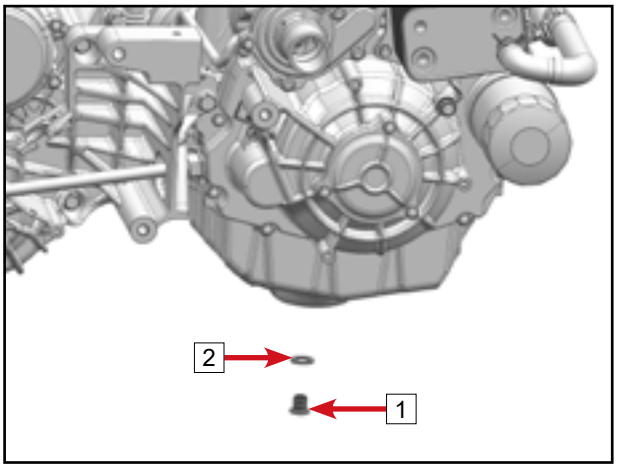

Gear Oil

Remove plug 1.

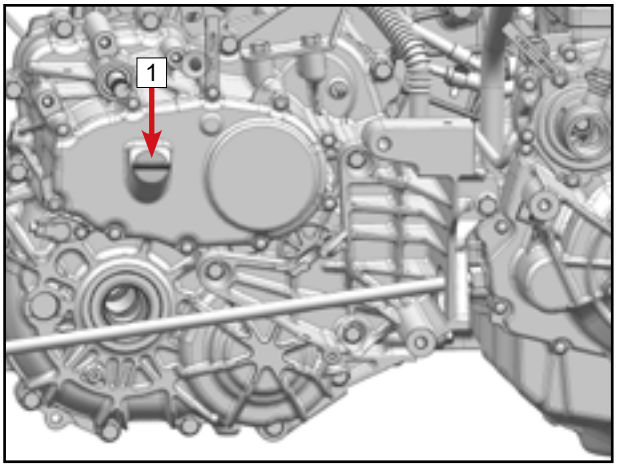

© CFMOTO Powersports, Inc. This manual is subject to all applicable copyright laws. Reproduction or duplication in any form, whole or in part, is strictly prohibited.

Place a container under the transmission drain bolt to catch the drained oil.

Remove the drain bolt [1] and washer [2]. Allow the gear oil to drain completely.

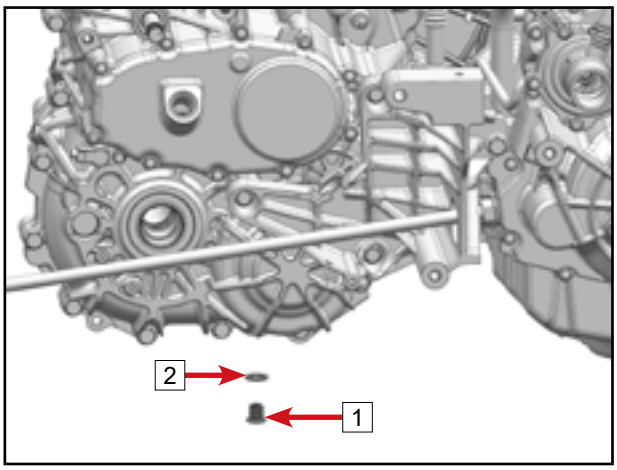

5.3.2 CVT Case Removal

Remove the CVT case cover and CVT system. (See Chapter 04)

Loosen and remove bolts [1] diagonally. Remove windage cover [2].

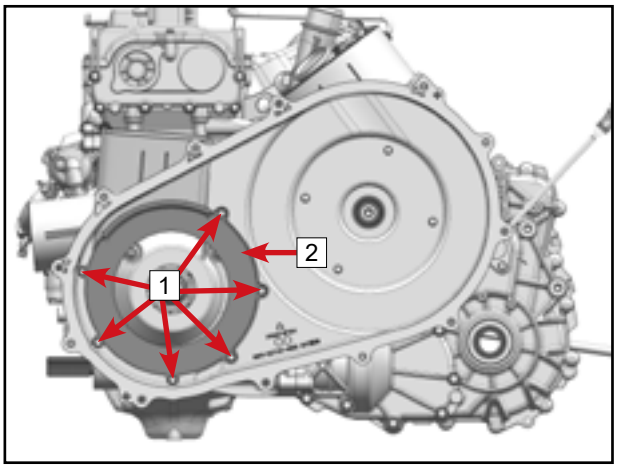

Loosen and remove diagonally bolts M10×1.25×30 [1], bolts M8×22 [2] and bolts M6×25 [3].
Remove CVT case [4].

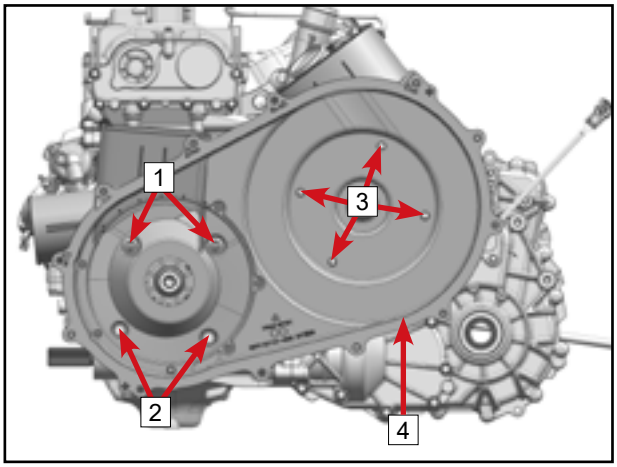

NOTE
Rubber seal rings [1] and [2] attached to the CVT case.

Check rubber seal ring [1] and [2] for brittleness, hardening or damage. Replace if necessary.

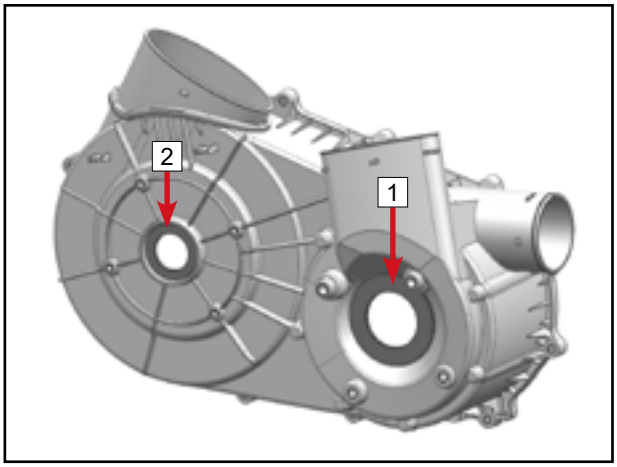

© CFMOTO Powersports, Inc. This manual is subject to all applicable copyright laws. Reproduction or duplication in any form, whole or in part, is strictly prohibited.

5.3.3 Gearbox Removal

Remove bolt [1] and bolts [2].
Remove supercharger bracket [3].

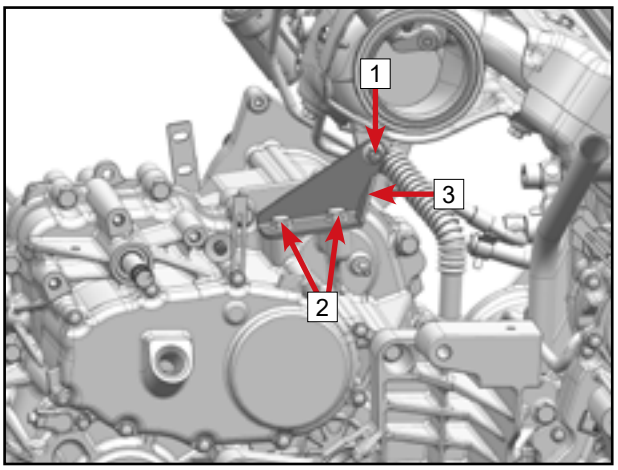

Remove bolts M8×25 [1] and bolts M8×38 [2].
Remove gearbox assembly [3].

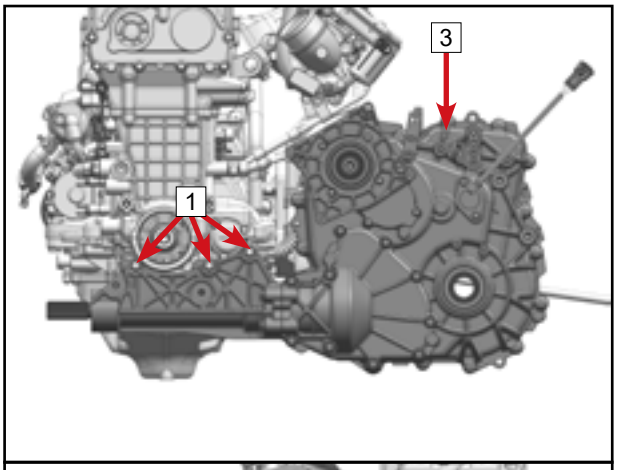

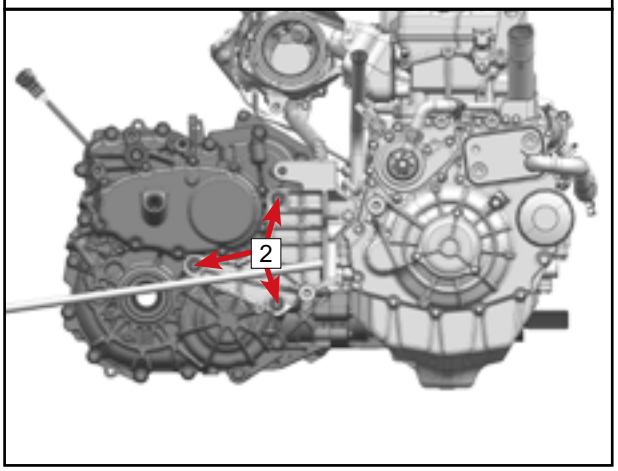

NOTE
For gearbox overhaul, refer to Chapter 04.

Dowel pins [1] are retained on the lower crankcase.

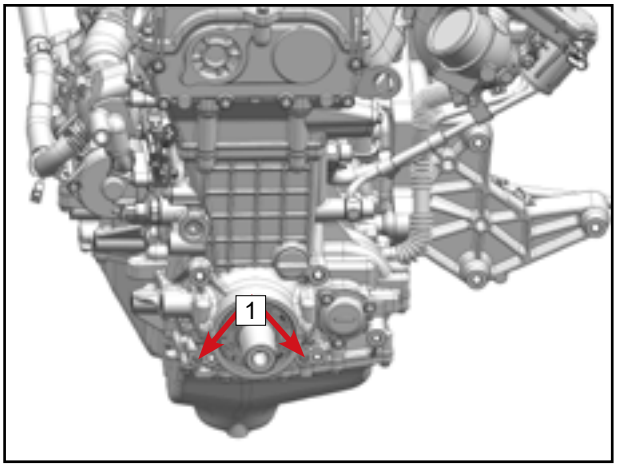

© CFMOTO Powersports, Inc. This manual is subject to all applicable copyright laws. Reproduction or duplication in any form, whole or in part, is strictly prohibited.

Remove bolt M10×40 [1] and bolts M8×38 [2].
Remove gearbox connecting bracket [3].

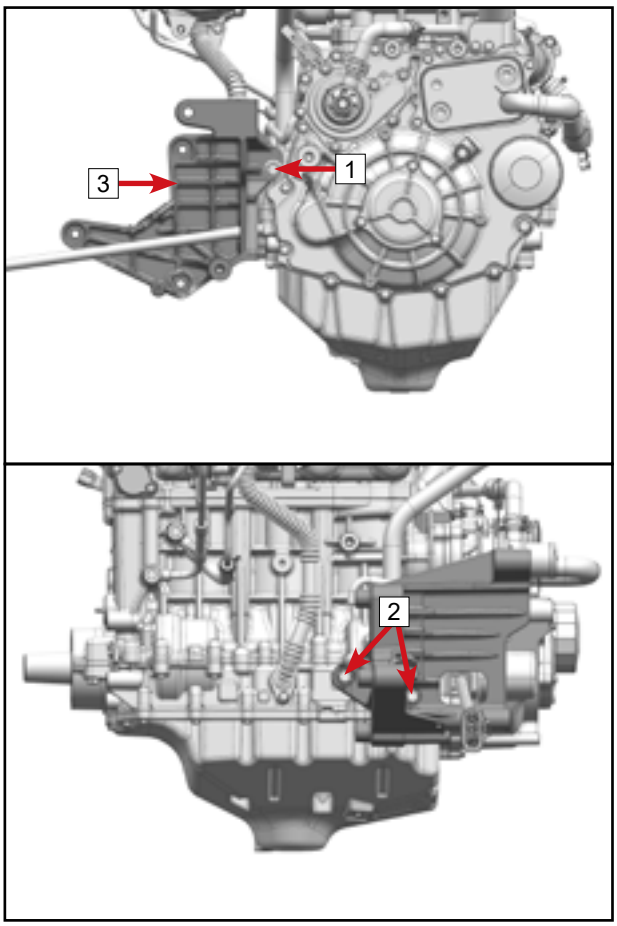

5.3.4 Dipstick Tube Removal

Remove bolt [1].
Remove dipstick tube assembly [2].

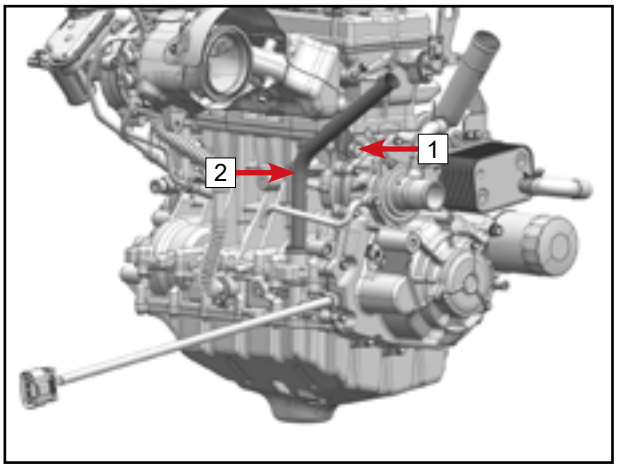

5.3.5 Turbocharger Removal

Remove the bolt [1].
Remove the turbocharger water inlet bolt [2] and the turbocharger oil inlet bolt gasket [3].
Remove the turbocharger water outlet pipe [4].

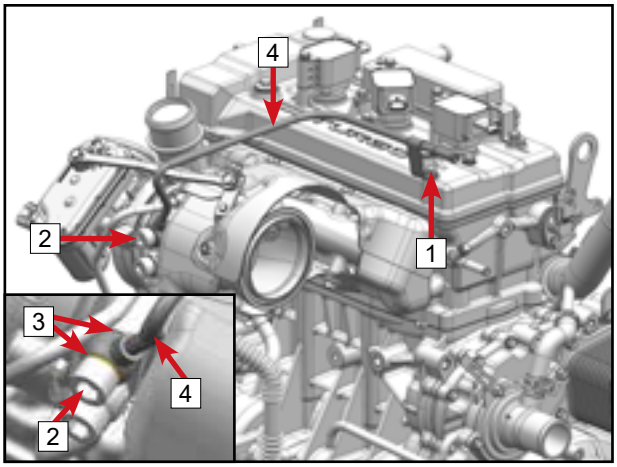

© CFMOTO Powersports, Inc. This manual is subject to all applicable copyright laws. Reproduction or duplication in any form, whole or in part, is strictly prohibited.

Remove the bolt 1.

Remove the turbocharger oil inlet bolt 2 2 and the turbocharger oil inlet bolt gasket 3.

Remove the turbocharger oil inlet bolt 4 and the turbocharger oil inlet bolt gasket 5. Remove the turbocharger oil inlet pipe 6.

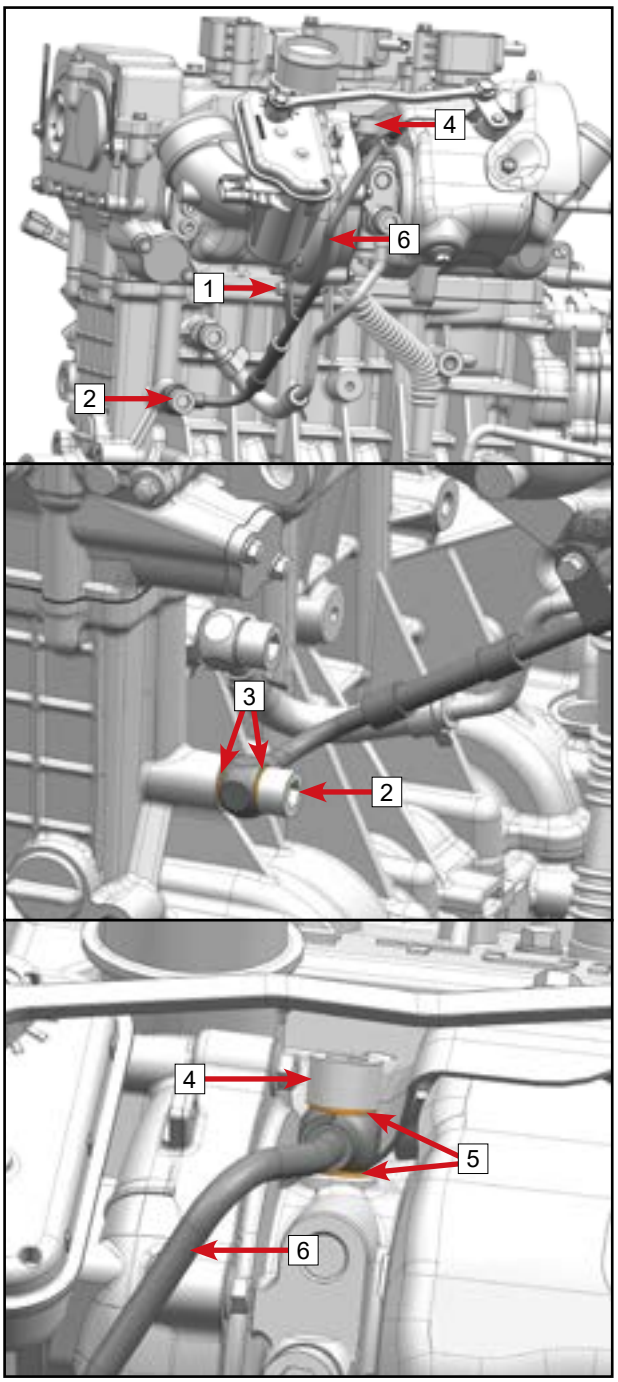

© CFMOTO Powersports, Inc. This manual is subject to all applicable copyright laws. Reproduction or duplication in any form, whole or in part, is strictly prohibited.

Remove the bolt 1.

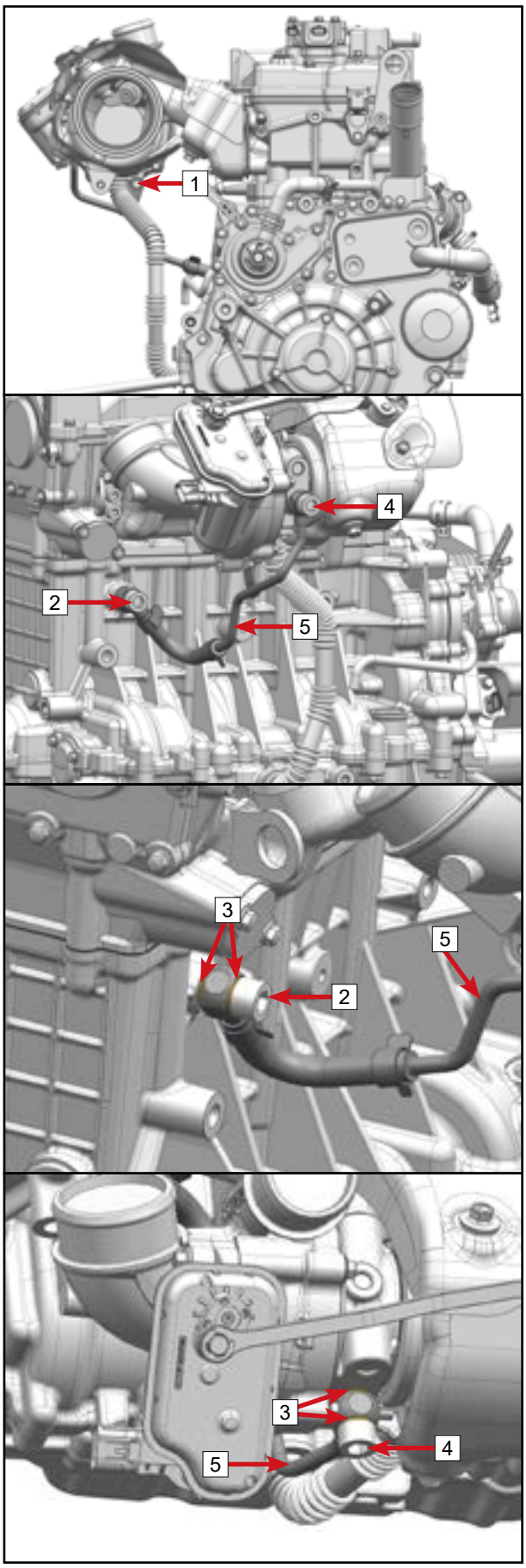

Remove the turbocharger oil inlet bolt 2 and the turbocharger oil inlet bolt gasket 3.

Remove the turbocharger water inlet bolt 4 and the turbocharger oil inlet bolt gasket 3.

Remove the turbocharger water inlet pipe assembly 5.

© CFMOTO Powersports, Inc. This manual is subject to all applicable copyright laws. Reproduction or duplication in any form, whole or in part, is strictly prohbited.

Remove the bolts [1].

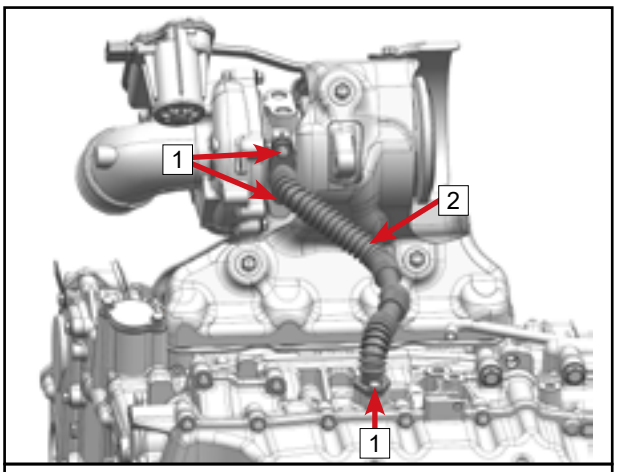

Remove the turbocharger oil return pipe assembly [2] and gasket [3].
Discard the gasket [3].

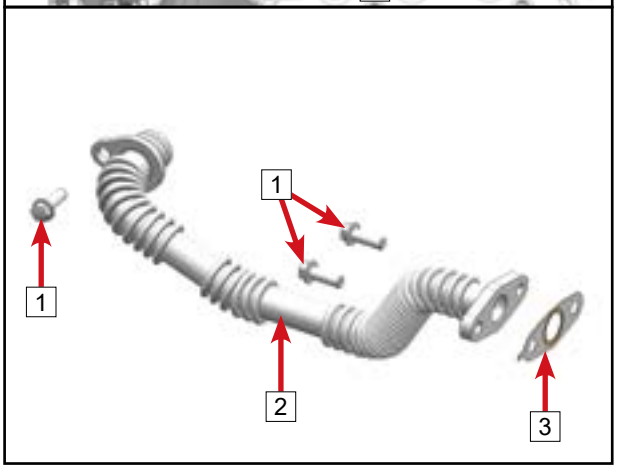

Remove the bolts [1] and their washers [3].
Remove turbocharger heat shield [2].

NOTE
There is a washer [3] on each bolt [1] at positions [A] and [B].

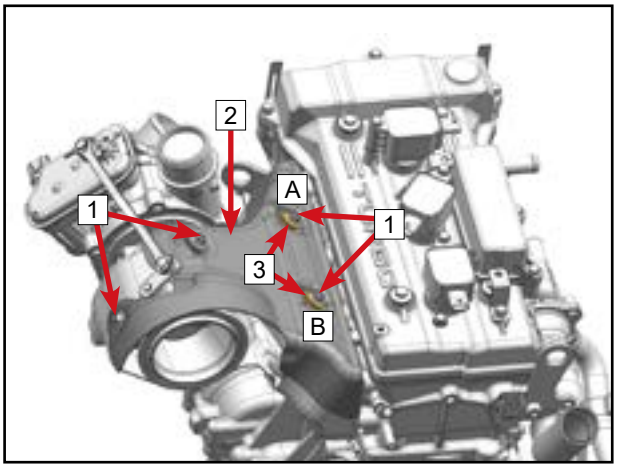

Remove bolts [1].
Remove turbocharger heat shield [2].

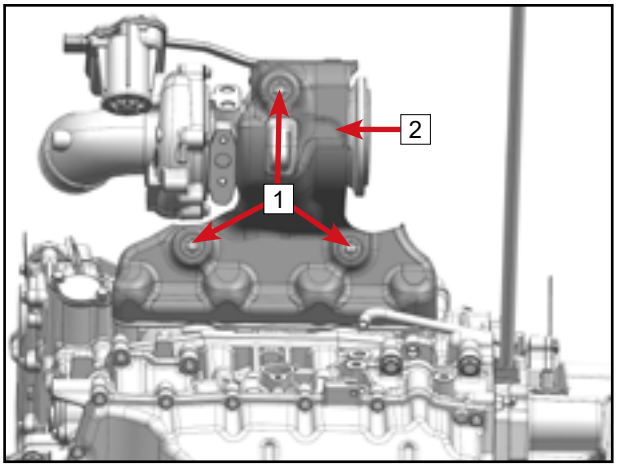

© CFMOTO Powersports, Inc. This manual is subject to all applicable copyright laws. Reproduction or duplication in any form, whole or in part, is strictly prohibited.

Remove the lock nut M8 [1] and washer.
Remove the heat-resistant bolt M8×45 [2] and washer.
Remove turbocharger [3].

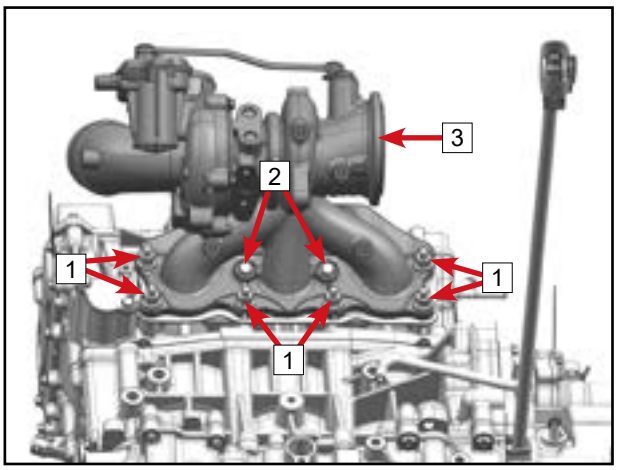

Remove the heat insulation plate integrated with the turbocharger gasket [1] and discard it.

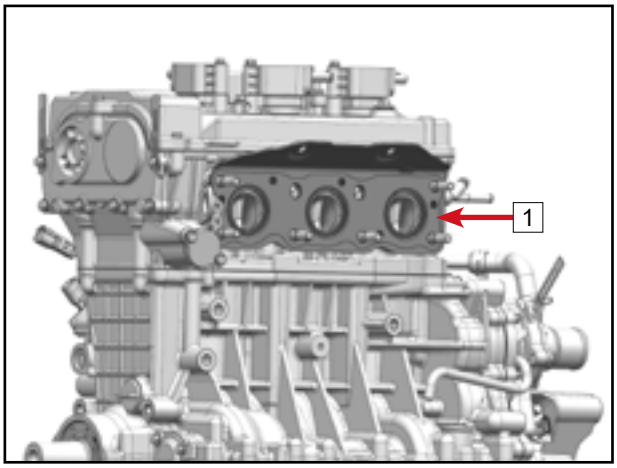

5.3.6 Oil Cooler Water Outlet Hose Removal

Seperate clamp [1] from oil cooler water outlet hose bracket [2].

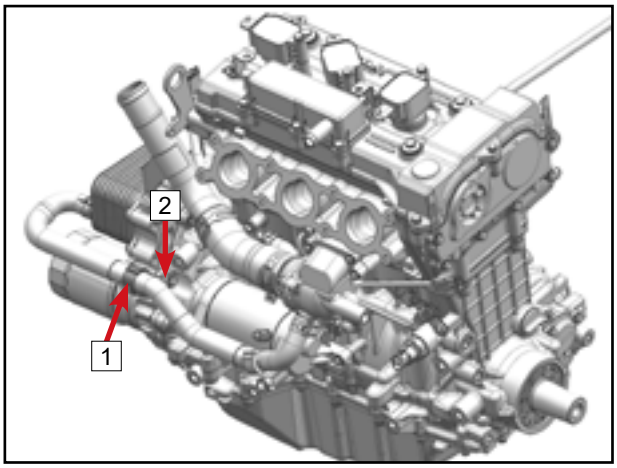

Release clamp [1], remove the oil cooler water outlet hose [3] from the oil cooler.
Release clamp [2], remove the oil cooler water outlet hose [3] from the thermostat seat.

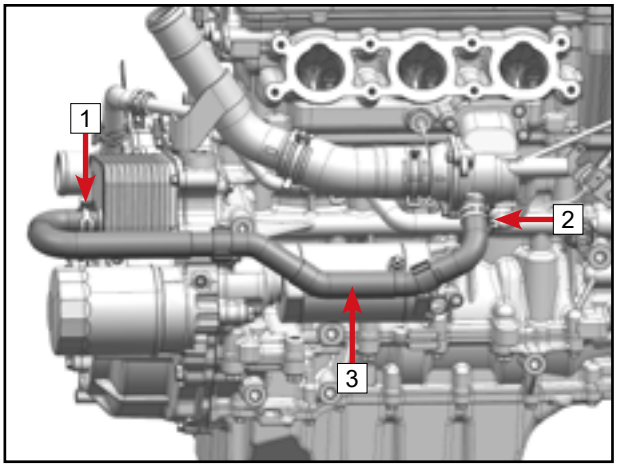

© CFMOTO Powersports, Inc. This manual is subject to all applicable copyright laws. Reproduction or duplication in any form, whole or in part, is strictly prohibited.

5.3.7 Thermostat Outlet Pipe Removal

Remove the bolts [1] and separate the thermostat outlet pipe [2] from the rear end cover of the cylinder block.

Loosen the clamp [3], and unplug the thermostat water outlet hose [4] from the thermostat cover.

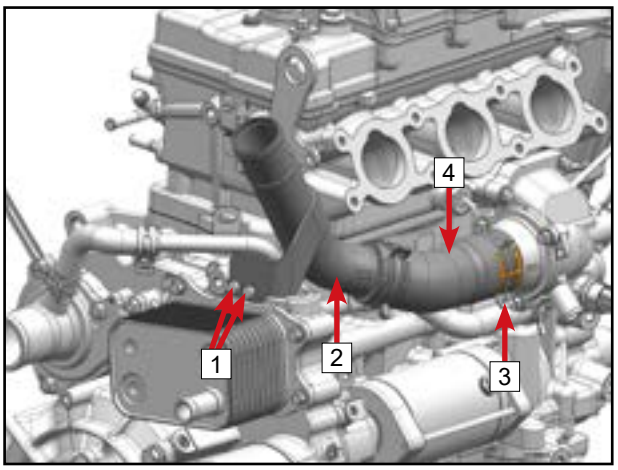

5.3.8 Circulation Return Pipe Removal

Release clamp [1], unplug the pipe from the pump.

Release clamp [2], remove pipe from thermostat seat.

Remove bolt [3], remove the circulation return pipe [4].

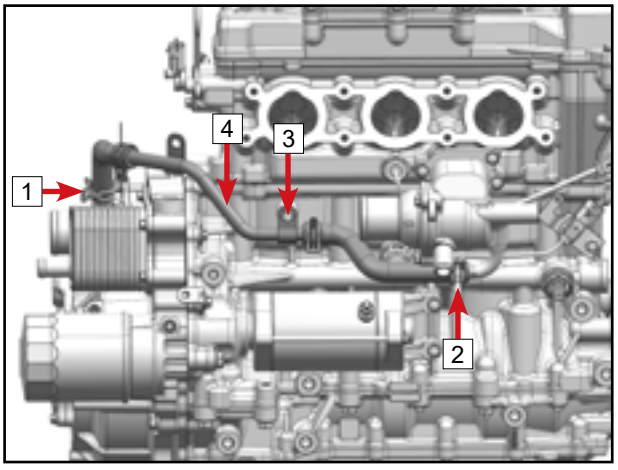

5.3.9 Thermostat Seat and Thermostat Removal

Remove bolts [1].

Remove thermostat seat and thermostat [2].

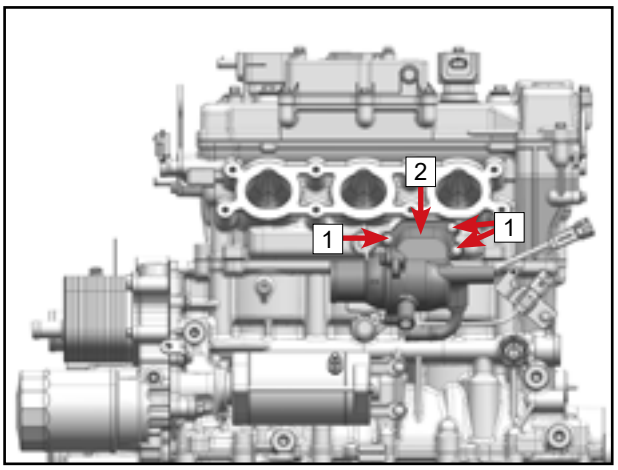

5.3.10 Oil Filter Removal

Remove oil filter assembly [1].

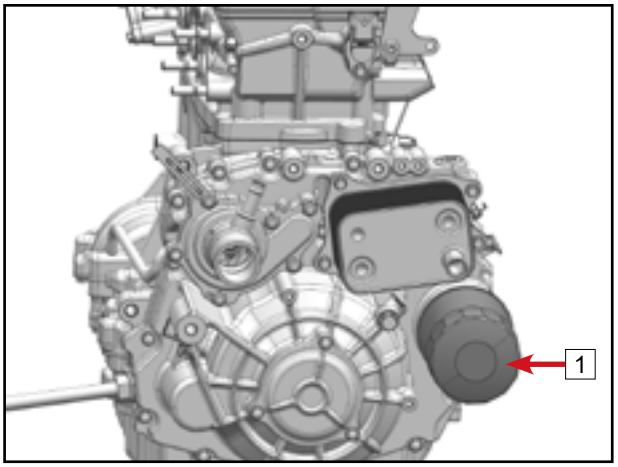

© CFMOTO Powersports, Inc. This manual is subject to all applicable copyright laws. Reproduction or duplication in any form, whole or in part, is strictly prohbited.

5.3.11 Oil Cooler Removal

Remove bolts [1].
Remove oil cooler assembly [2].

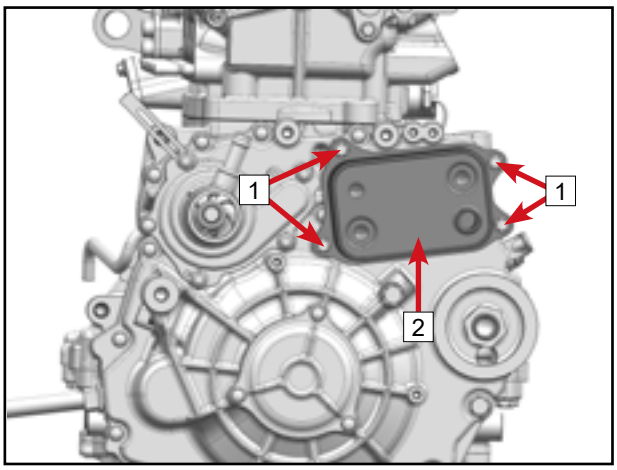

Remove oil cooler seal [1] and O-ring [2] from rear end cover of cylinder body.

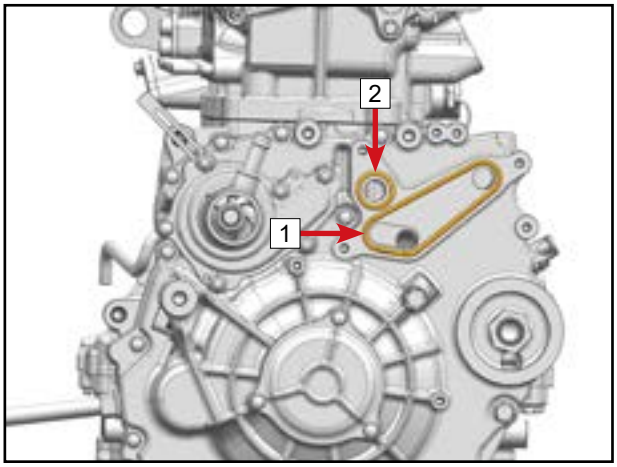

5.3.12 Starter Motor Removal

Remove bolts [1].
Remove starter motor assembly [2].

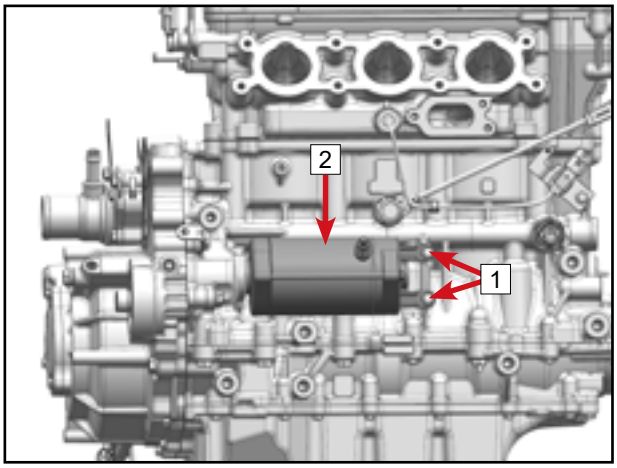

5.3.13 Ignition Coil and Spark Plug Removal

Remove bolts [1].
Remove ignition coils [2].

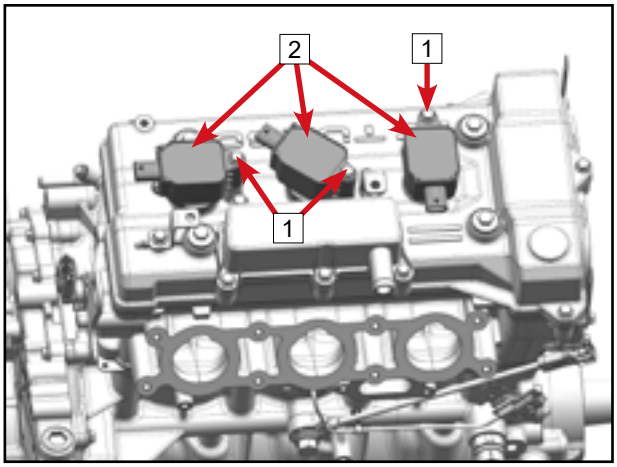

© CFMOTO Powersports, Inc. This manual is subject to all applicable copyright laws. Reproduction or duplication in any form, whole or in part, is strictly prohibited.

Remove spark plugs [1].

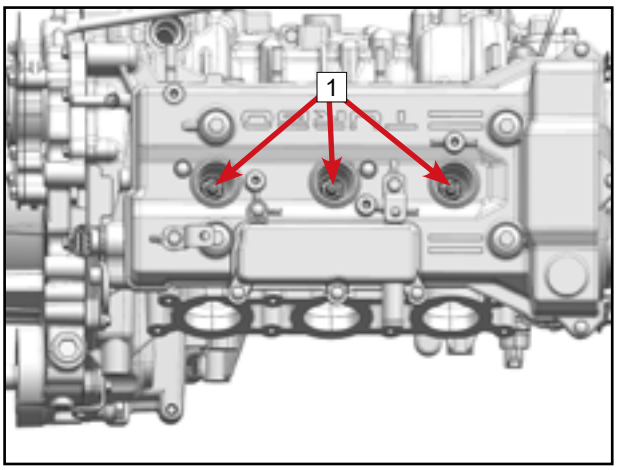

5.3.14 Cylinder Head Cover Removal

Remove bolts [1].
Remove cable bracket [2].

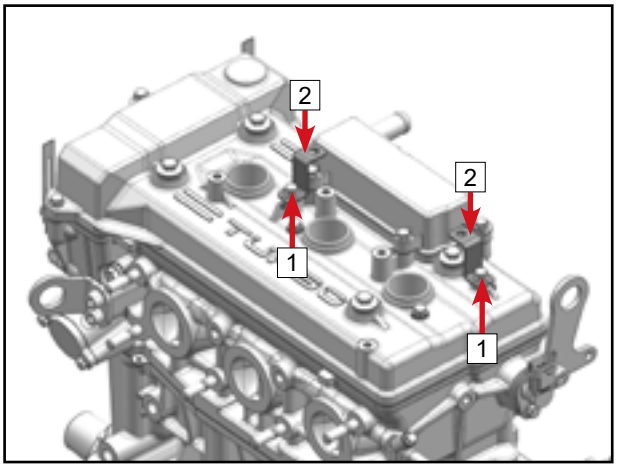

Remove bolts [1].
Remove bolts [2] and washers [3].
Remove cylinder head cover bolts [4] and seal rings.
Remove the cylinder head cover [5] and cover seal ring.

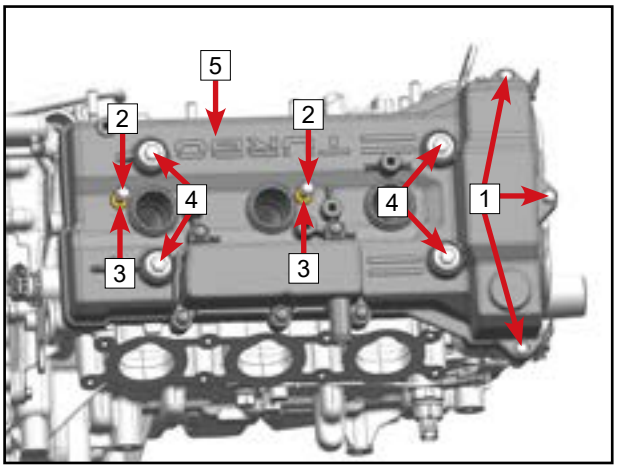

5.3.15 Timing Chamber Cover Removal

Loosen and remove diagonally bolts [1].
Remove clips [2].
Remove timing chamber cover [3].

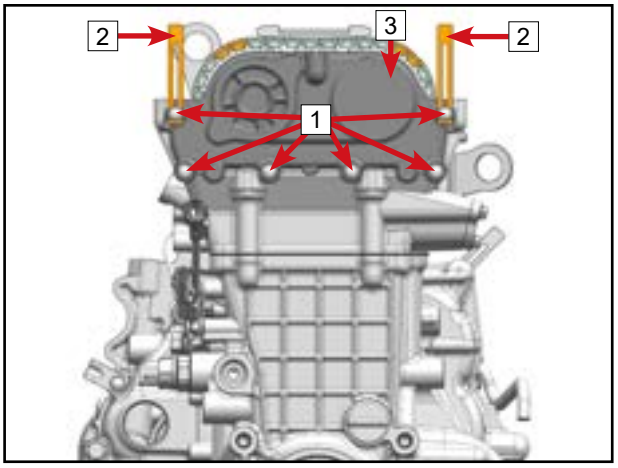

© CFMOTO Powersports, Inc. This manual is subject to all applicable copyright laws. Reproduction or duplication in any form, whole or in part, is strictly prohibited.

Dowel pins 1 remain on the cylinder head.

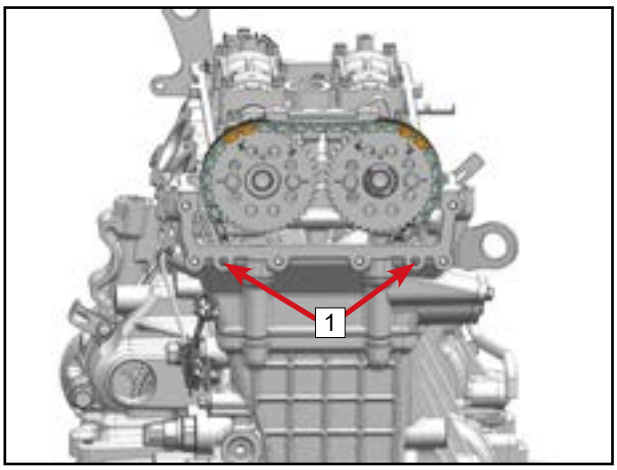

5.3.16 Camshaft Assembly Removal

Remove bolts 1.
Remove the magneto plug cover 2 and the magneto plug cover sealing ring 3.

Check whether the sealing ring 3 is cracked, hardened or otherwise damaged. Replace it when necessary.

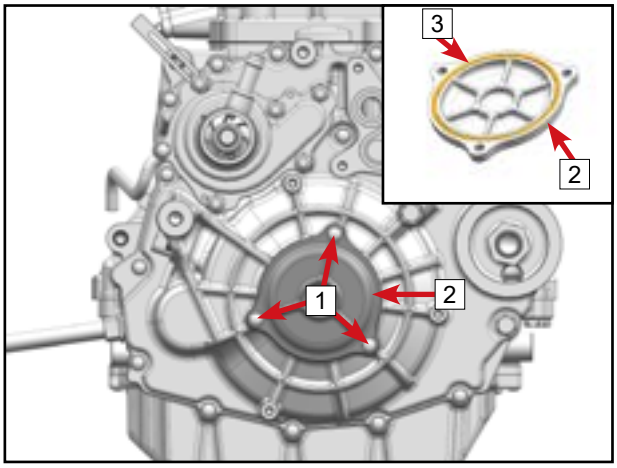

Remove bolt 1.
Remove RPM sensor 2.

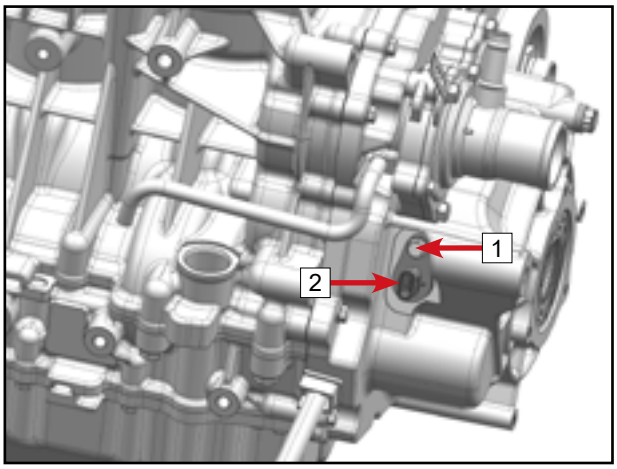

Rotate the magneto bolt 1 clockwise to place the crankshaft at the TDC of cylinder 1.

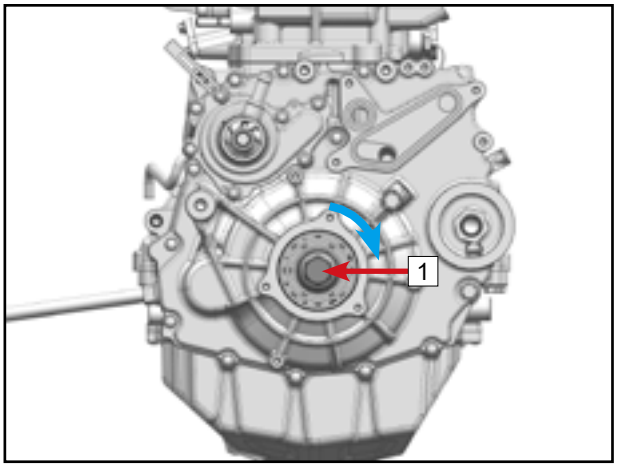

© CFMOTO Powersports, Inc. This manual is subject to all applicable copyright laws. Reproduction or duplication in any form, whole or in part, is strictly prohibited.

When the crankshaft is at TDC of cylinder 1, make sure that the position of each mark is as shown:

The "1T" line mark [1] on the magneto is aligned with the center of the mounting hole [2] of the speed sensor.

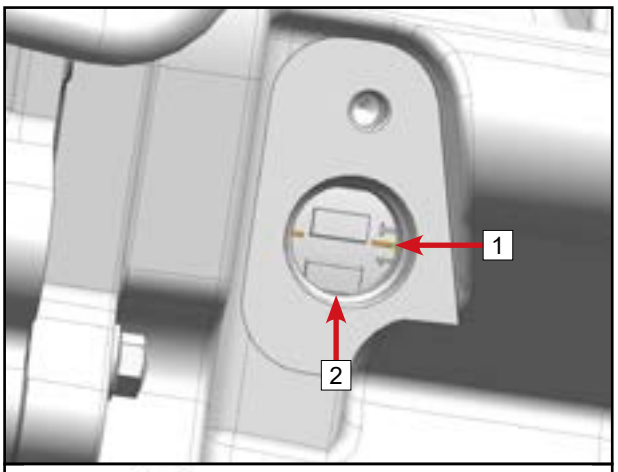

The 'IN' dot mark [3] on the intake camshaft timing sprocket and the 'EX' dot mark [4] on the exhaust camshaft timing sprocket both face upward.

The line mark [5] on the timing sprocket of the intake camshaft and the line mark [6] on the timing sprocket of the exhaust camshaft are flush with the sealing surface [7] of the cylinder head.

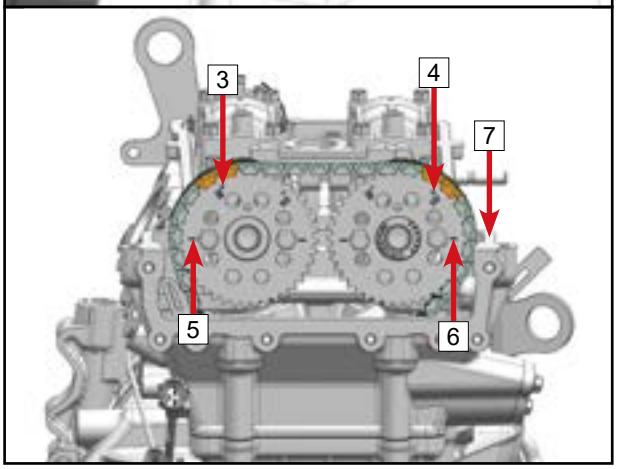

NOTE
Timing chain gold links shown are for engine reassembly reference only.

Remove bolts [1].
Remove tensioner assembly [2].

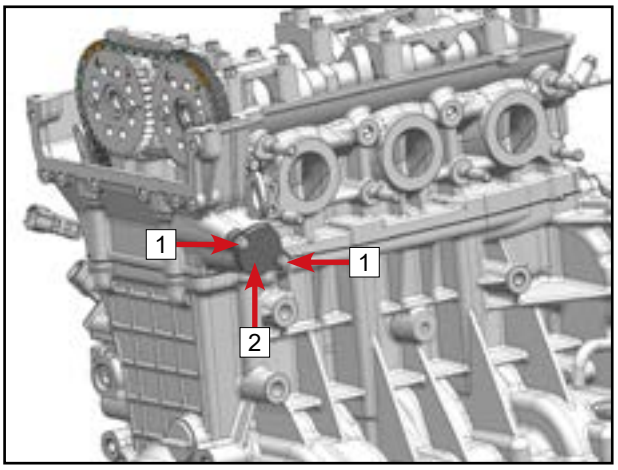

Remove bolt [1].
Remove camshaft position sensor [2].

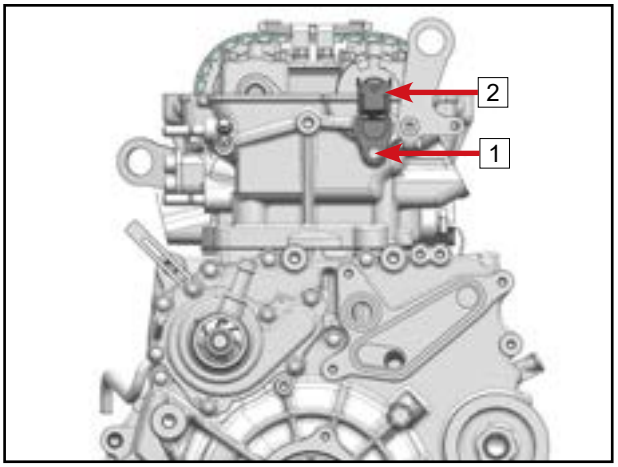

© CFMOTO Powersports, Inc. This manual is subject to all applicable copyright laws. Reproduction or duplication in any form, whole or in part, is strictly prohibited.

Remove bolts 1.
Remove chain upper guide assembly 2.

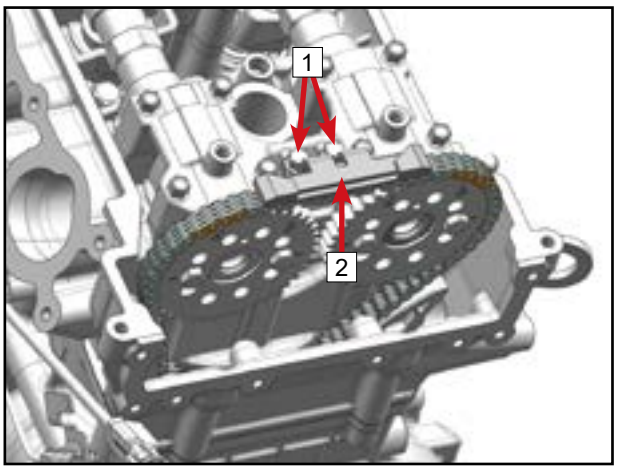

Loosen bolts 1 in order A~P and remove them (see image).

Remove the intake camshaft bearing cover (IN) 2 and exhaust camshaft bearing cover (EX) 3.

Remove the cam bearing front cover 4.

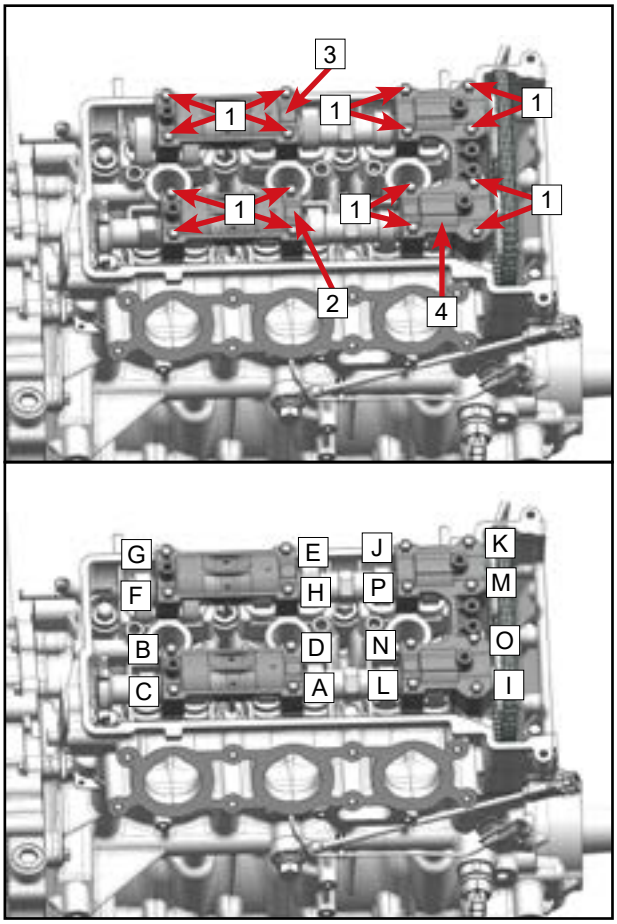

Remove exhaust camshaft assembly 1.
Remove intake camshaft assembly 2.

NOTE
After removing the camshaft, hook and secure the timing chain to prevent it from falling into the crankcase.

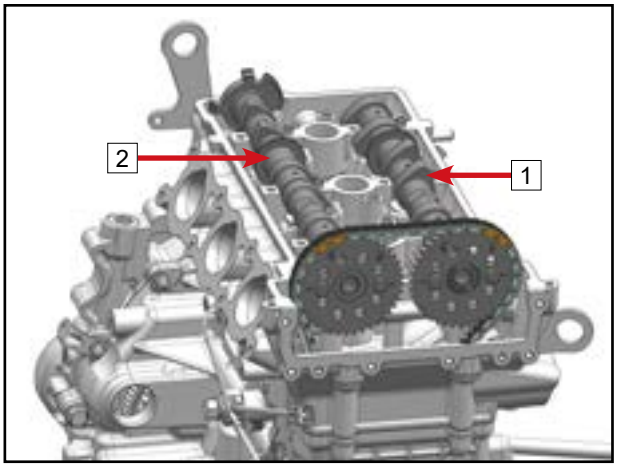

© CFMOTO Powersports, Inc. This manual is subject to all applicable copyright laws. Reproduction or duplication in any form, whole or in part, is strictly prohibited.

5.3.17 Cylinder Head Assembly

Removal

Remove screw 1.
Remove rear lifting hook 2.

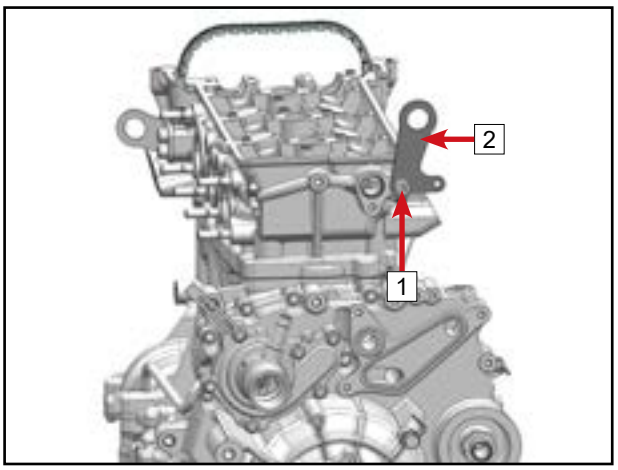

Remove screws 1.
Remove front lifting hook 2.

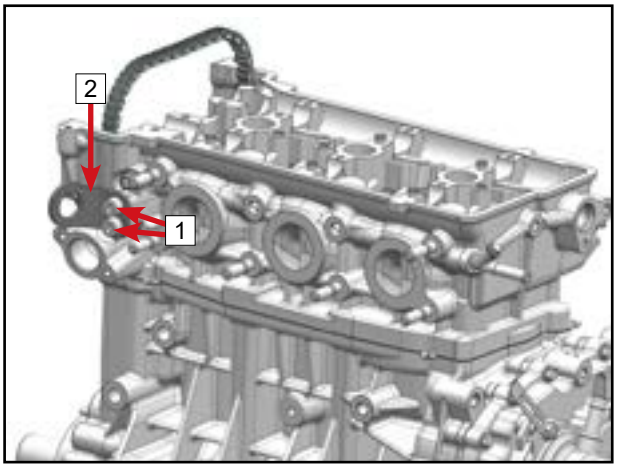

Separate the wire clamp 1 of the coolant temperature sensor from the cable bracket 2.

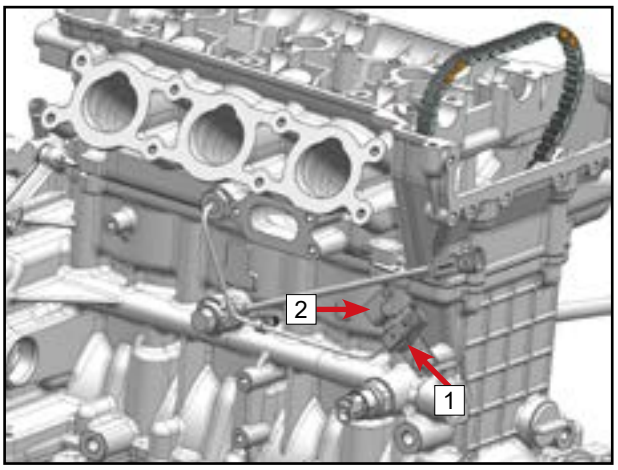

Remove bolts 1.
Loosen cylinder head bolts 2 and washers in the order of A~H as shown, then remove them.
Remove cylinder head assembly 3.

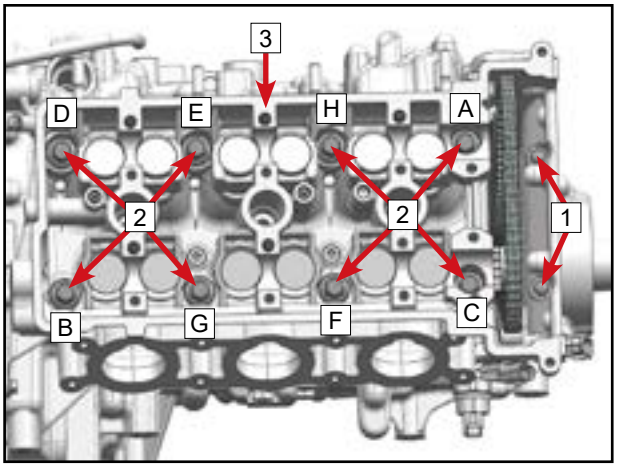

© CFMOTO Powersports, Inc. This manual is subject to all applicable copyright laws. Reproduction or duplication in any form, whole or in part, is strictly prohibited.

Remove the cylinder head gasket [1] and discard it.
Remove dowel pins [2] (if necessary).

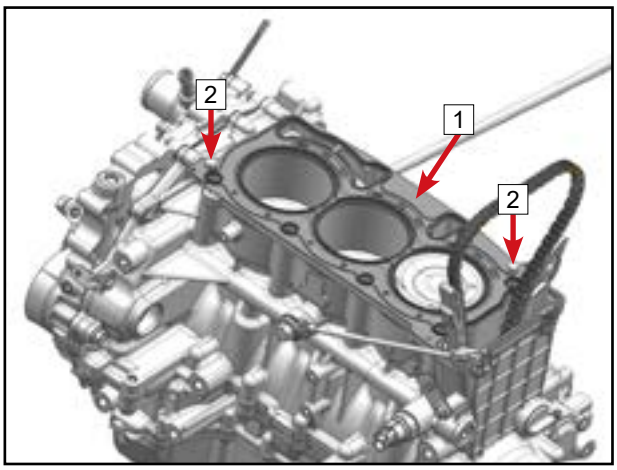

5.3.18 Timing Chain Guide and Tension Plate Removal

Remove guide [1].

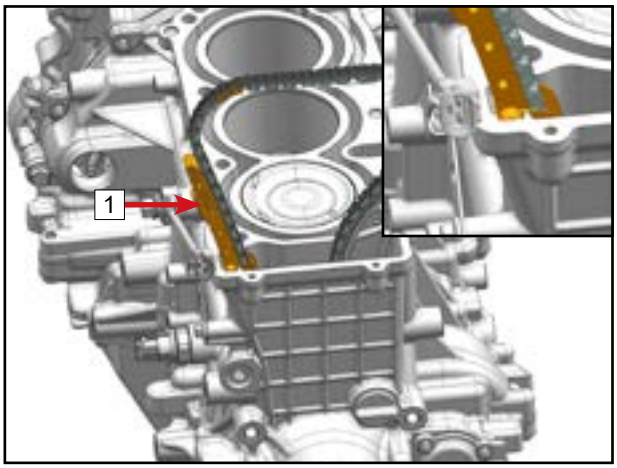

Remove screw plug [1].

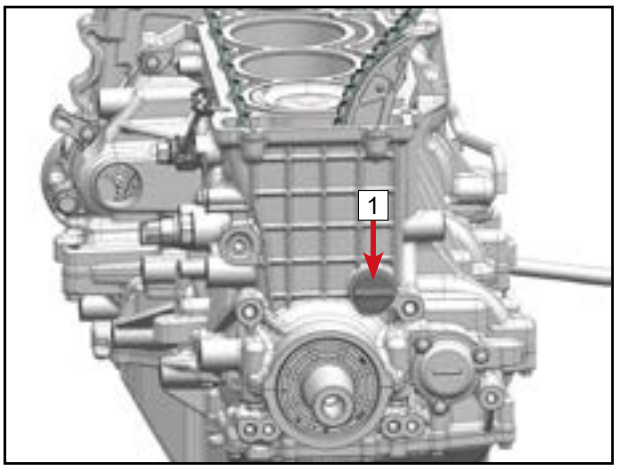

Remove screw pin [1].
Remove tension plate [2].

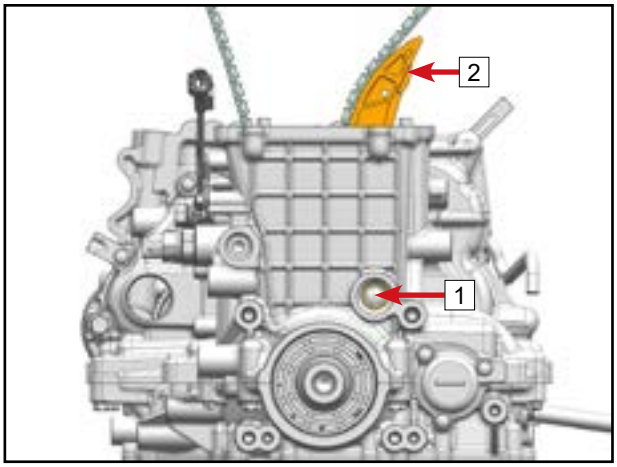

© CFMOTO Powersports, Inc. This manual is subject to all applicable copyright laws. Reproduction or duplication in any form, whole or in part, is strictly prohbited.

5.3.19 Magneto End Cover Removal

Loosen and remove bolts 1 and bolts 2 in at the front of the cover a criss-cross method.

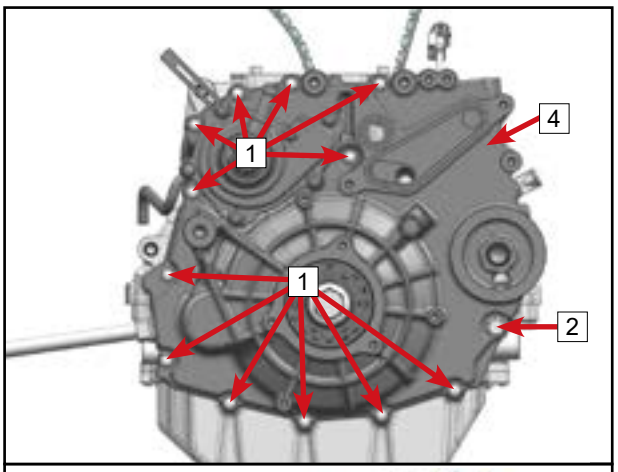

Loosen and remove bolts 1 and 2 at the rear of the magneto cover.
Remove oil cooler water outlet hose bracket 3.
Remove the magneto end cover 4.

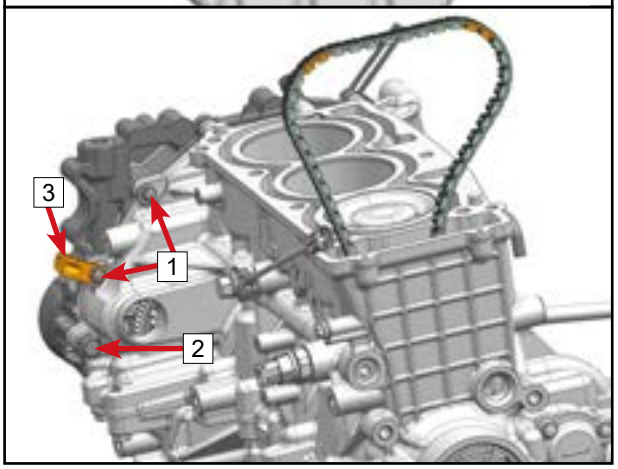

Remove magneto end cover gasket 1 and discard it.
Remove dowel pins 2 (if necessary).

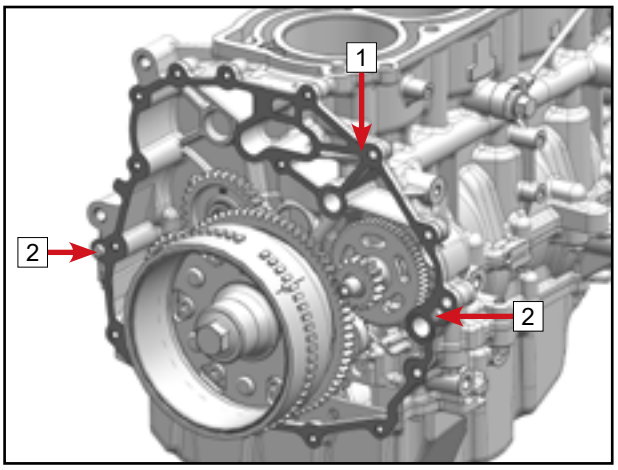

5.3.20 Magneto Rotor Removal

Remove magneto bolt 1.

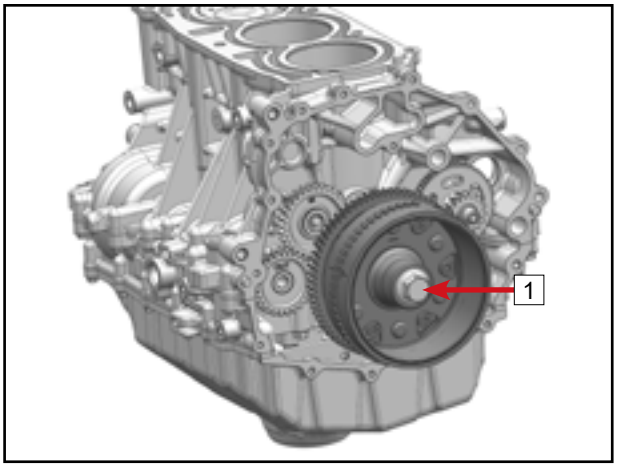

© CFMOTO Powersports, Inc. This manual is subject to all applicable copyright laws. Reproduction or duplication in any form, whole or in part, is strictly prohbited.

Install magneto rotor removal tool 1.

Magneto Rotor Removal Tool
(See section 5.1 for details.)

Screw in the bolt 2 of the removal tool to remove the magneto rotor assembly 3.

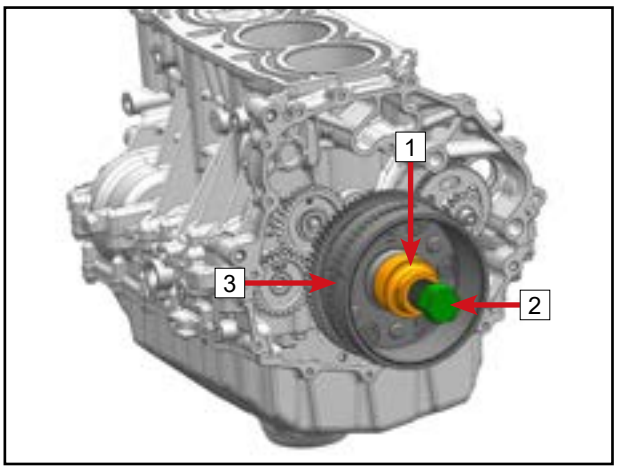

5.3.21 Starter Dual Gear Removal

Remove starter dual gear 1.
Remove dual gear shaft 2.

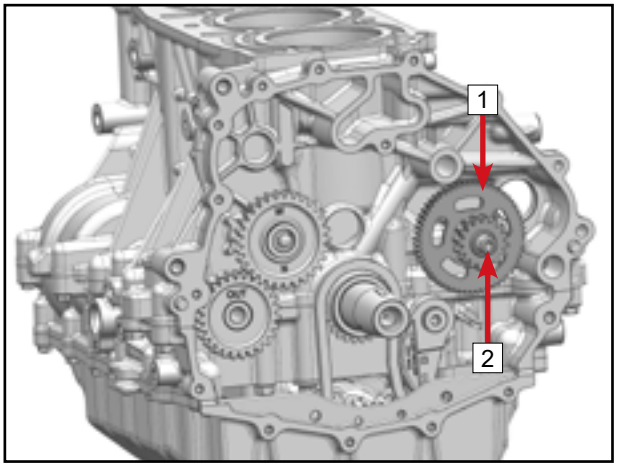

5.3.22 Idler Removal

Remove bolt 1.
Remove water pump idler sleeve 2 and water pump idler 3.

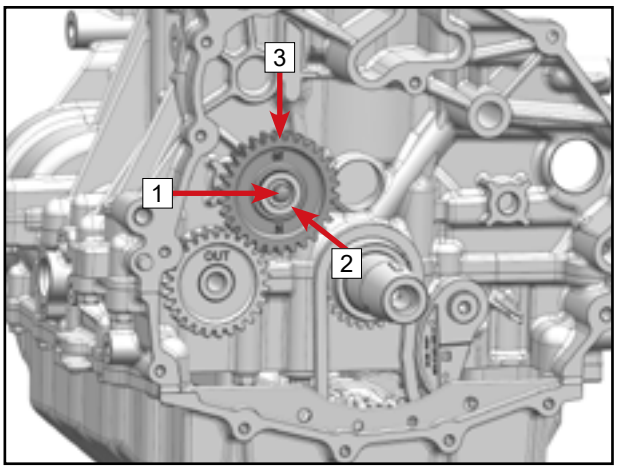

5.3.23 Oil Pan Removal

Flip the engine over to expose the oil pan.
Loosen the bolts 1 in a criss-cross method and remove them.

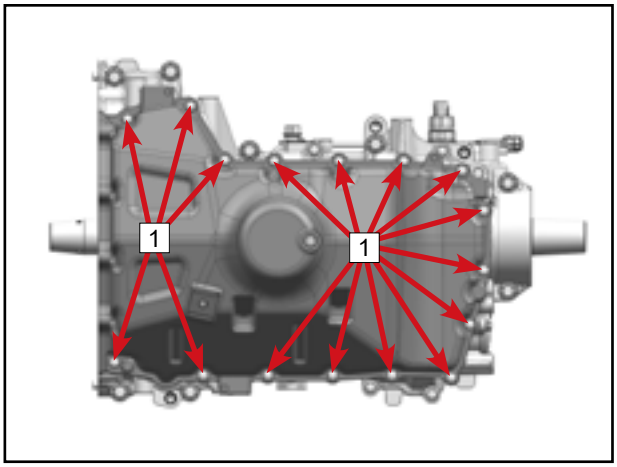

© CFMOTO Powersports, Inc. This manual is subject to all applicable copyright laws. Reproduction or duplication in any form, whole or in part, is strictly prohibited.

Use a suitable tool to loosen the oil pan 1 at prying points A and B, then separate it from the crankcase.

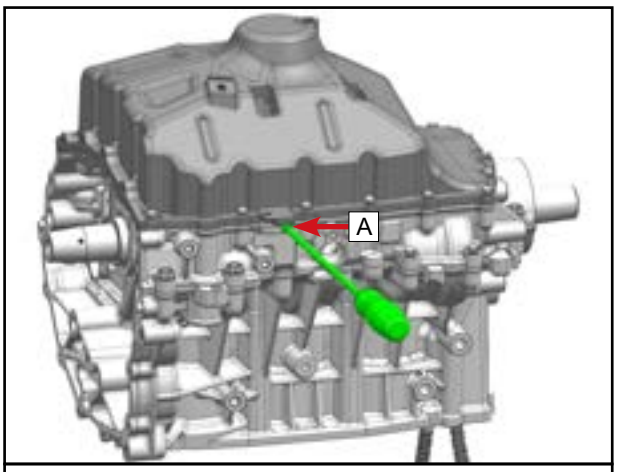

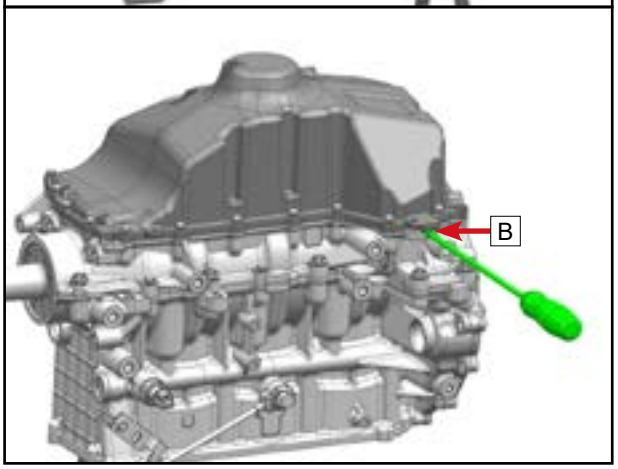

Remove dowl pints 1 (if necessary).

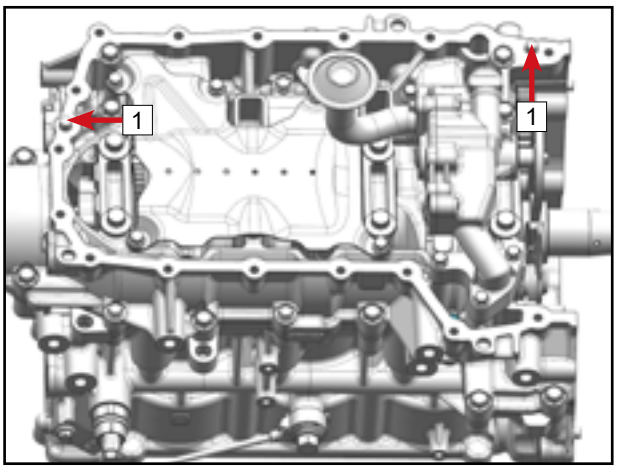

\

5.3.24 Oil Pump Removal

Remove the bolt 1 of the oil pump chain tension plate.

Remove the tension plate 2.

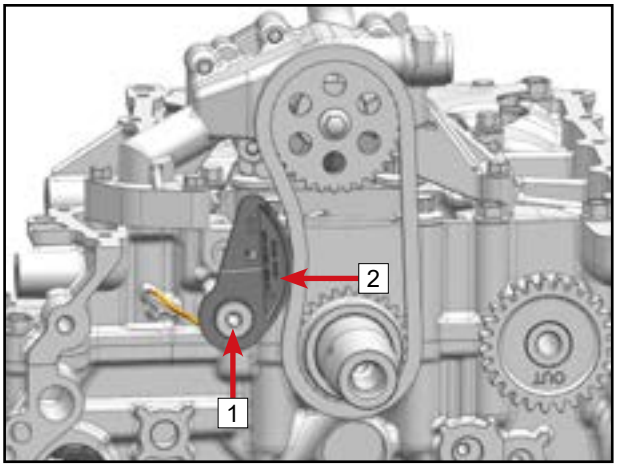

© CFMOTO Powersports, Inc. This manual is subject to all applicable copyright laws. Reproduction or duplication in any form, whole or in part, is strictly prohibited.

Remove bolt [1] (left-hand thread) from the driven sprocket [2] of the oil pump and then remove the oil pump chain [3].

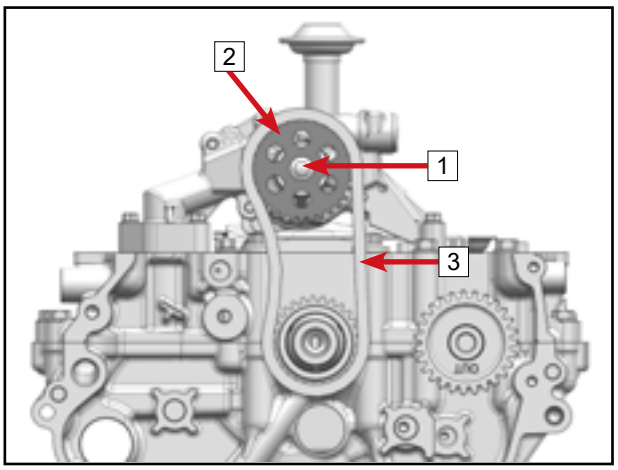

Loosen the oil pump bolts [1] in a criss-cross method, then remove them.

Remove the oil pump [2].

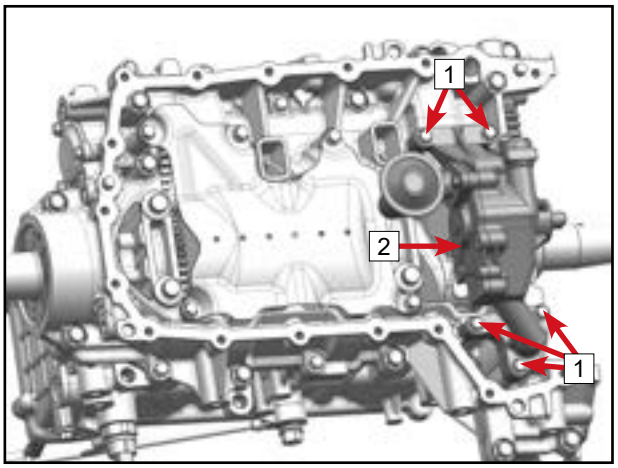

Remove dowel pins [1] (if necessary).

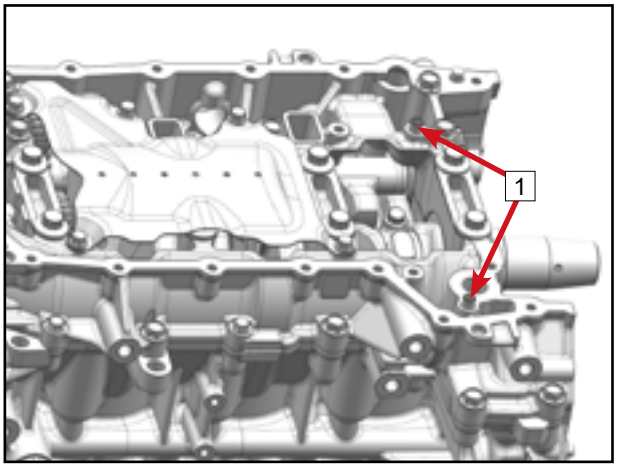

5.3.25 Lower Crankcase Disassembly

Remove bolts [1].

Remove balance shaft end cover [2].

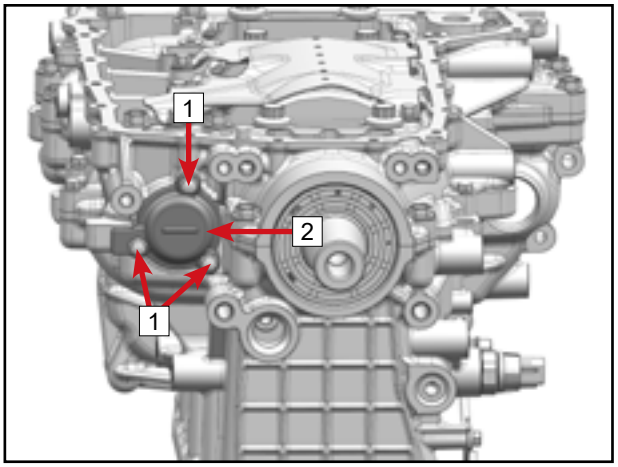

© CFMOTO Powersports, Inc. This manual is subject to all applicable copyright laws. Reproduction or duplication in any form, whole or in part, is strictly prohibited.

Loosen the oil baffle bolts [1] in a criss-cross method, then remove them
Remove oil baffle [2].

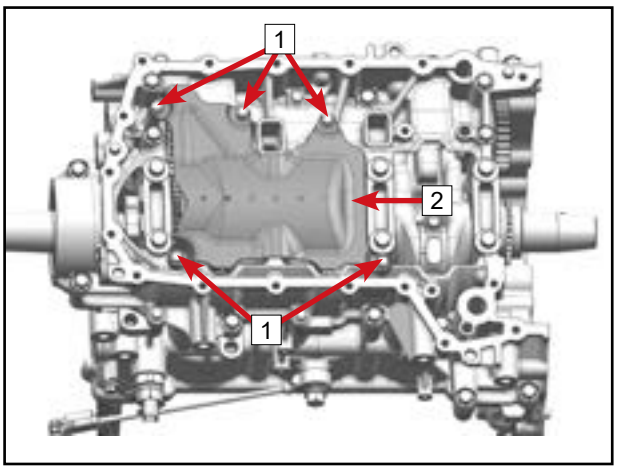

Loosen the bolts M6×25 [1] in a criss-cross method, then remove them.

Loosen the bolts M8×28 [2] and bolts M8×73 [3] in a criss-cross method, then remove them.

Loosen the main bearing bolts (M10×1.25×88) [4] in a criss-cross method, then remove them.

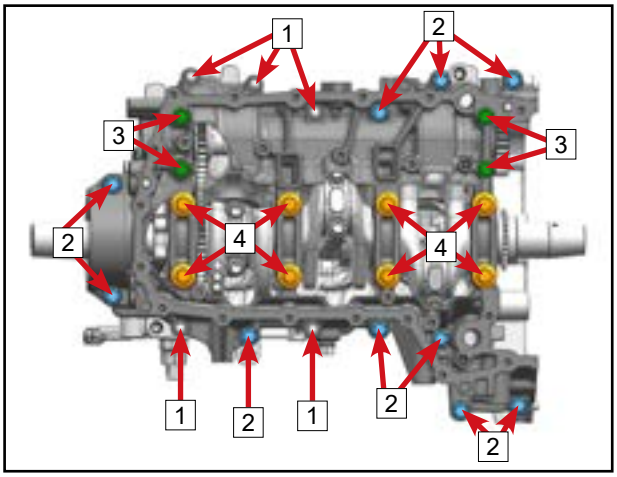

Use a suiteable tool to loosen the lower crankcase [1] at prying points [A], [B], [C] and [D], then separate it from the cylinder body.

NOTE
Make sure the plain bearings remain in place.

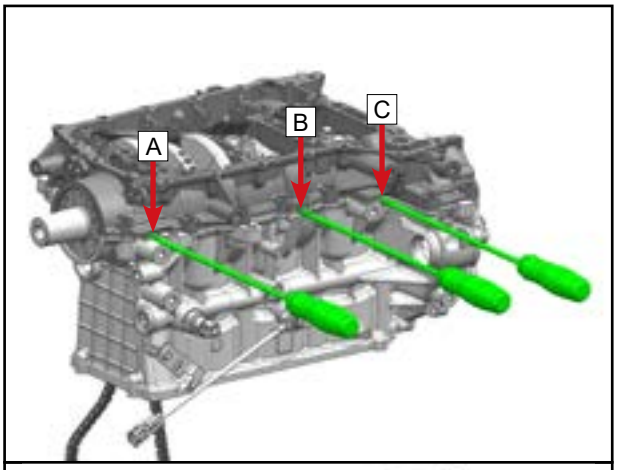

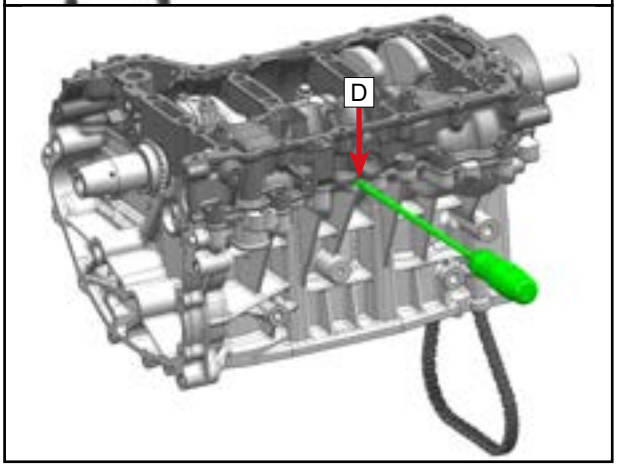

© CFMOTO Powersports, Inc. This manual is subject to all applicable copyright laws. Reproduction or duplication in any form, whole or in part, is strictly prohbited.

5.3.26 Balance Shaft and Crankshaft Removal

Remove the balance shaft assembly 1 .

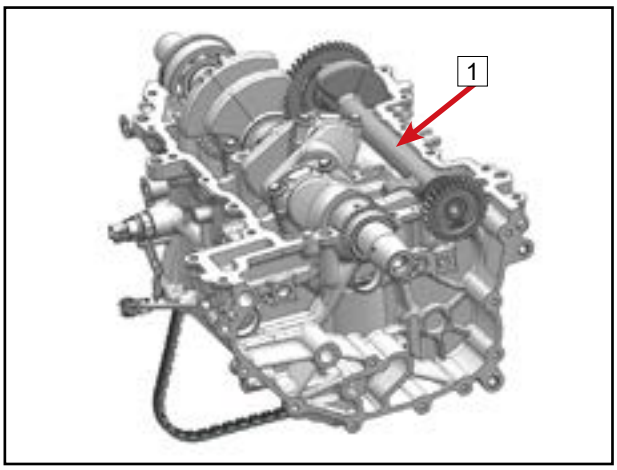

NOTE
Before removing the connecting rod caps, measure the axial clearance of each connecting rod big end (See section 5.4.16).

Remove the connecting rod bolts 1.

Remove connecting rod caps 2, 3 and 4.

NOTE
Make sure the connecting rod plain bearing remains in place for protection.

NOTE
Connecting rod caps and rods are matched in pairs and must never be mixed up.

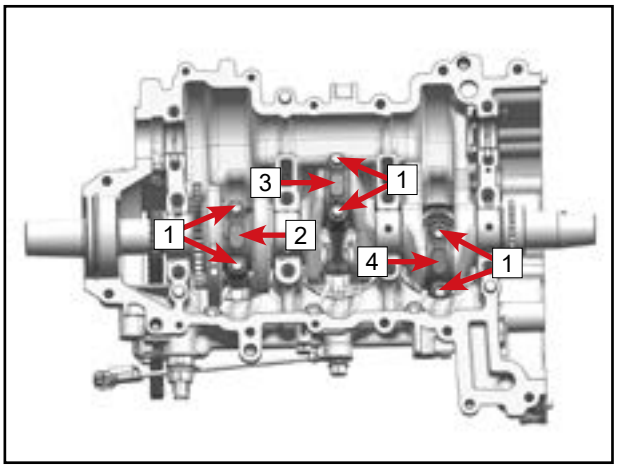

Remove the crankshaft assembly 1 and timing chain 2.

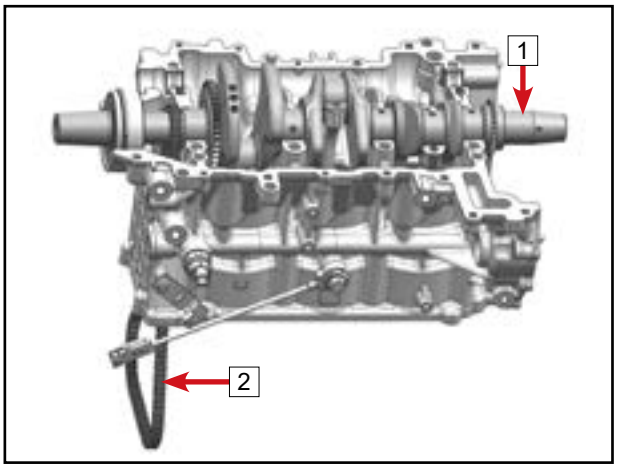

Remove the oil seal 1 and discard it.

Remove the circlip 2 and discard it.

Remove the roller bearing 3 and inspect. for smooth rotation, excessive wear. Replace if necessary.

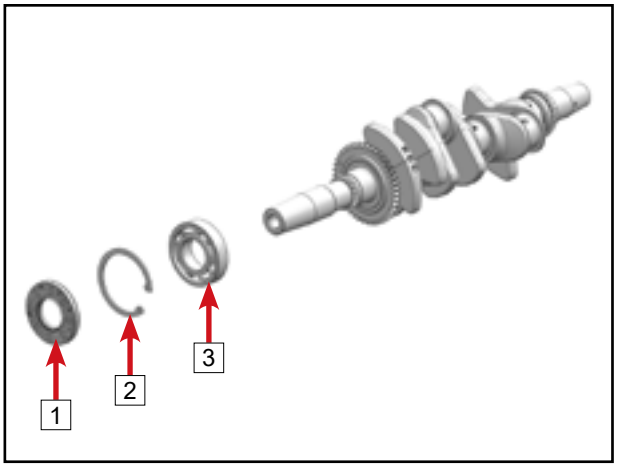

© CFMOTO Powersports, Inc. This manual is subject to all applicable copyright laws. Reproduction or duplication in any form, whole or in part, is strictly prohibited.

5.3.27 Piston and Connecting Rod Removal

Rotate and secure the crankcase with the cylinders facing up.

Mark pistons 1, 2 and 3 according to their cylinder position.

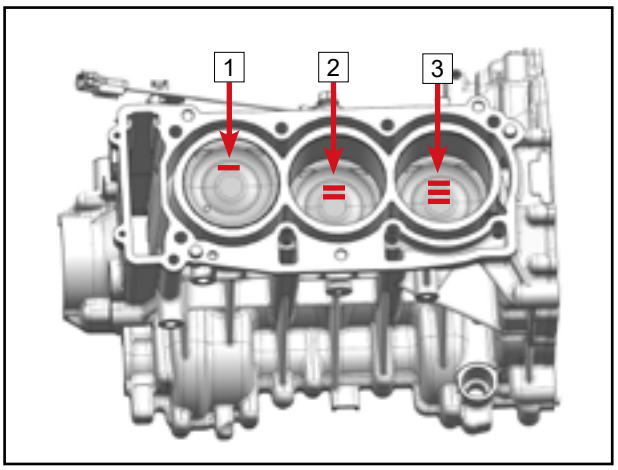

Remove pistons with connecting rod upward out of the cylinder.

NOTE
Make sure the connecting rod does not damage the cylinder.

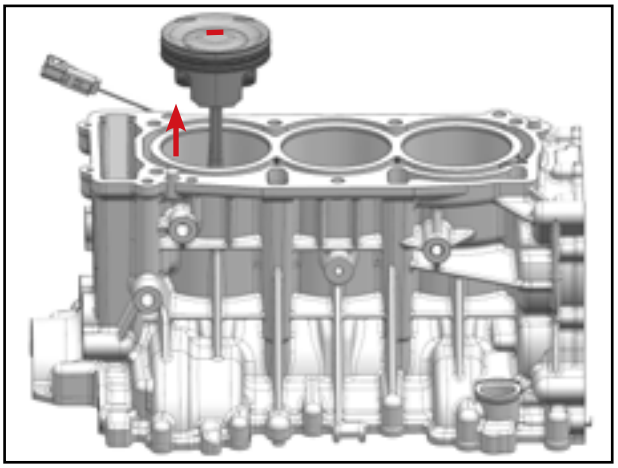

Remove one piston pin retainer 1 and discard it.

NOTE
It is not necessary to remove both piston pin retainers when removing the piston pin.

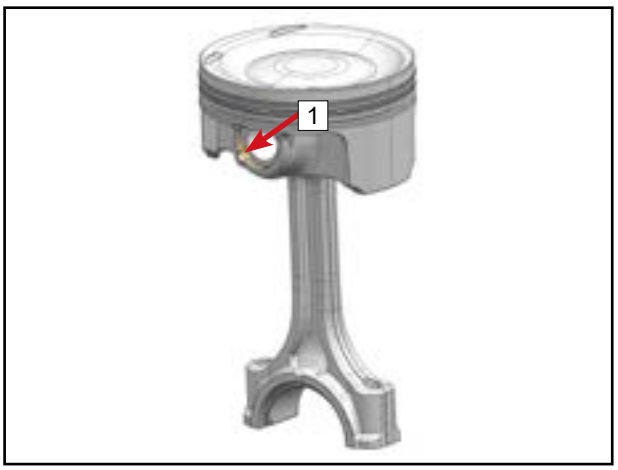

Push the piston pin 1 out of the piston. Separate the piston 2 from the connecting rod.

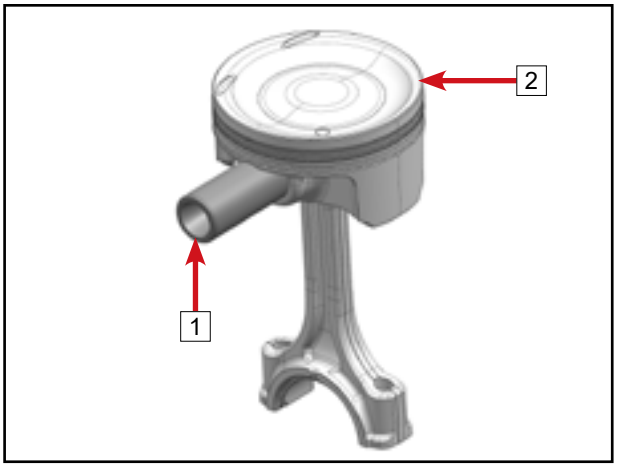

© CFMOTO Powersports, Inc. This manual is subject to all applicable copyright laws. Reproduction or duplication in any form, whole or in part, is strictly prohbited.

Mark the piston and connecting rod sets accordingly.

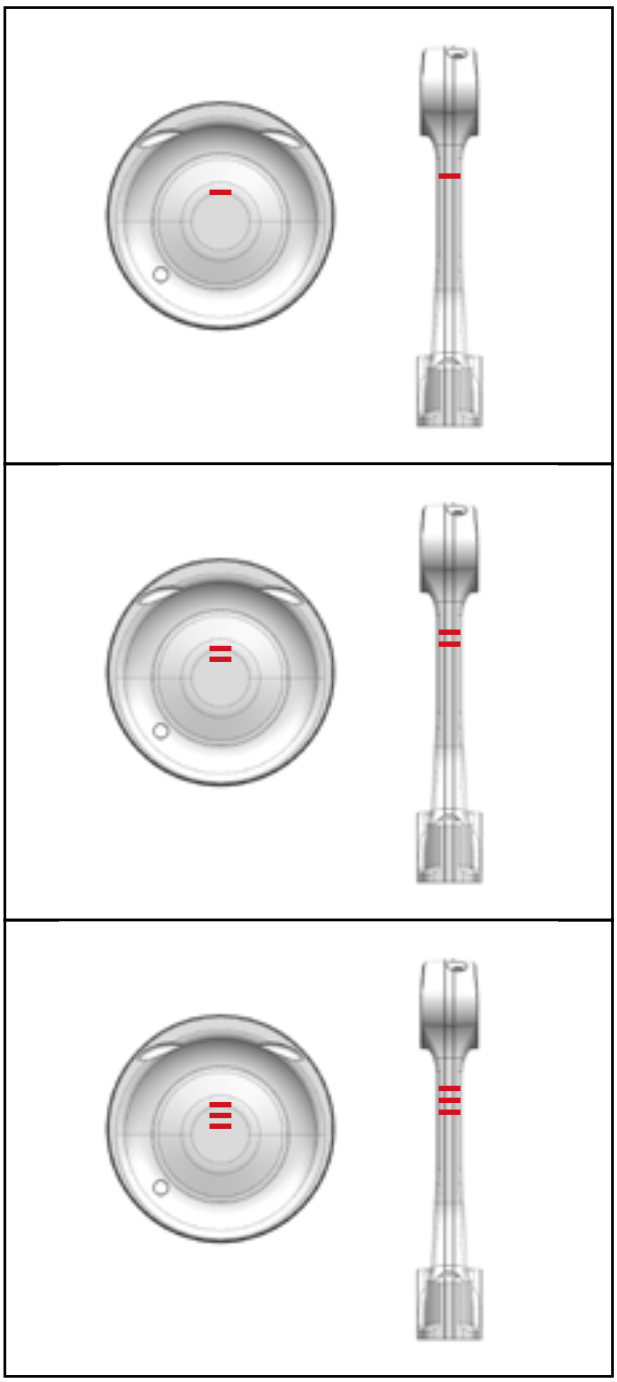

© CFMOTO Powersports, Inc. This manual is subject to all applicable copyright laws. Reproduction or duplication in any form, whole or in part, is strictly prohbited.

5.4 Engine Parts Inspection

5.4.1 Crankshaft and Balance Shaft Bearing Radial Clearance

Pre-work

Remove all remaining sealant and thoroughly clean the lower crankcase.

Clean the lower main plain bearings [1] and [2] and balance shaft plain bearings [3].

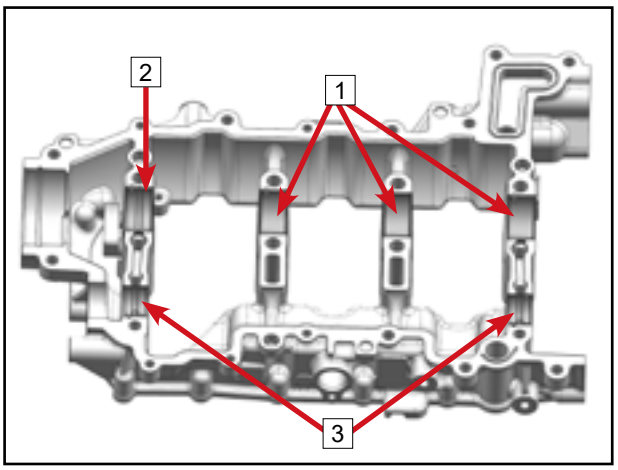

NOTE
The lower main plain bearing [2] has a lubrication groove.

Remove all remaining sealant and thoroughly clean the cylinder body.

Clean the upper main plain bearings [1] and [2] and balance shaft plain bearings [2].

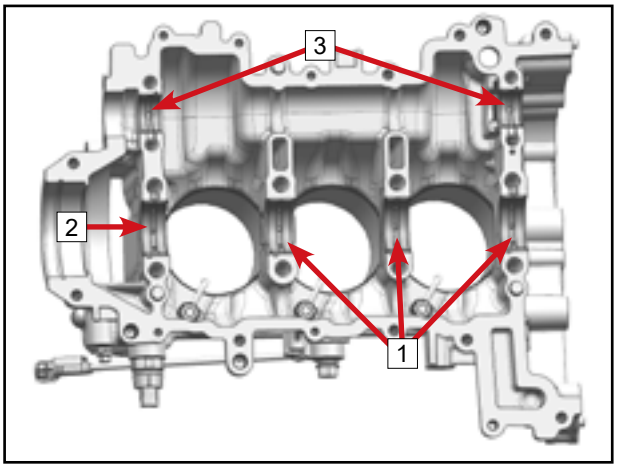

NOTE
If installing plain bearings, do not confuse upper main plain bearings [1] and [2], as they are made of different materials. CVT side upper main plain bearing [2] is a copper bearing with a tin-plated surface and is a silver-white color. It is installed on the CVT side of the cylinder body. The remaining upper main plain bearings [1] are made of aluminum alloy.

Assembly and Inspection

Install lower crankcase [1] onto the cylinder body [2].

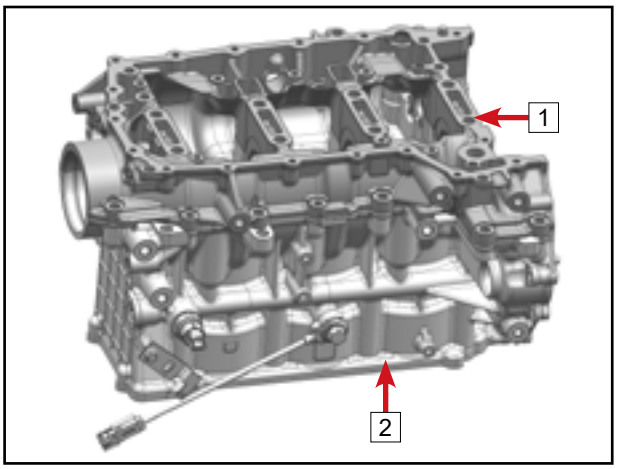

© CFMOTO Powersports, Inc. This manual is subject to all applicable copyright laws. Reproduction or duplication in any form, whole or in part, is strictly prohibited.

Install crankcase bolts and tighten them in sequence as shown in the image.

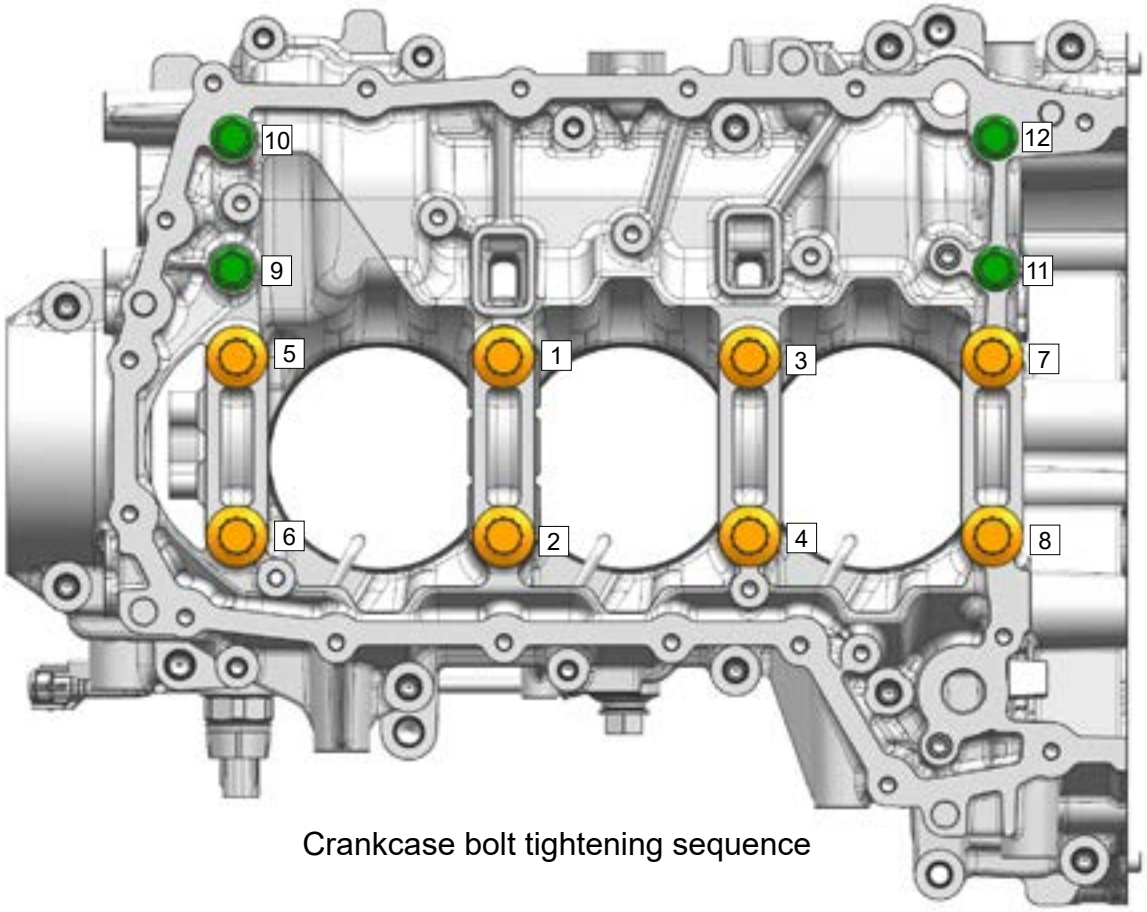

Crankcase bolt tightening sequence

Step 1: Tighten bolts 1~12 to 20 N•m (14.7 ft-lb.).
Step 2: Tighten bolts 1~8 to 40 N•m (29.5 ft-lb.).
Step 3: Twist bolts 1~8 90°, tighten bolts 9~12 to 27N•m (19.9 ft-lb.).

Bolts 1~8: Main bearing bolts, M10×1.25×88
Bolts 9~12: M8×73

© CFMOTO Powersports, Inc. This manual is subject to all applicable copyright laws. Reproduction or duplication in any form, whole or in part, is strictly prohbited.

Perpendicular to the crankcase seam, measure the inner diameter [A] of the crankshaft main bearing (4 places in total) and compare the outer diameter [D] of the crankshaft main journals at their corresponding positions (Refer to section 5.4.2).
The difference between [A] and [D] is the radial clearance of the crankshaft main bearing.

Crankshaft Main Bearing Radial Clearance	
Service Limit	[A] - [D] ≤0.08 mm (0.00315 in.)

If the crankshaft main bearing radial clearance exceeds the service limit, the main bearings, or crankshaft, or both, need to be replaced.

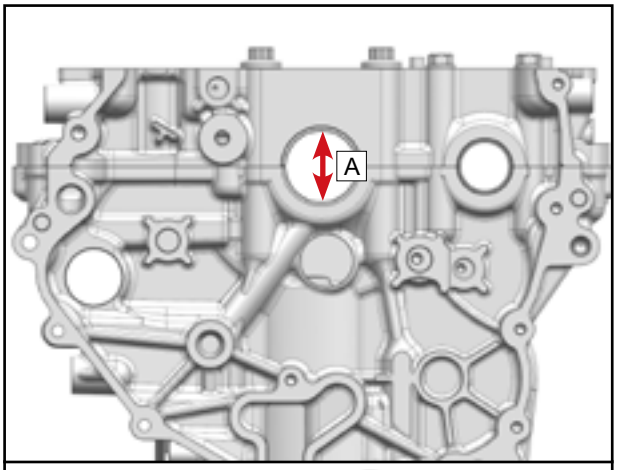

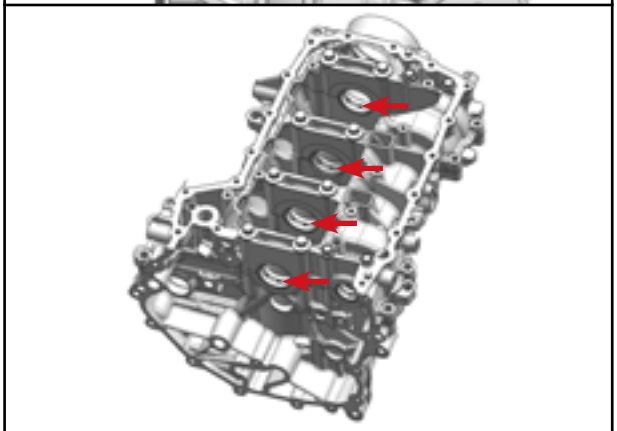

Crankshaft main bearing: 4 places

Perpendicular to the crankcase seam, measure the inner diameter [B] of the balance shaft bearing (2 places in total) and compare the diameter [E] of the balance shaft journals at their corresponding positions (Refer to section 5.4.2).
The difference between [B] and [E] is the radial clearance of the balance shaft bearing.

Balance Shaft Bearing Radial Clearance	
Service Limit	[B] - [E] ≤0.08 mm (0.00315 in.)

If the balance shaft bearing radial clearance exceeds the service limit, the balance shaft plain bearings, or balance shaft, or both, need to be replaced.

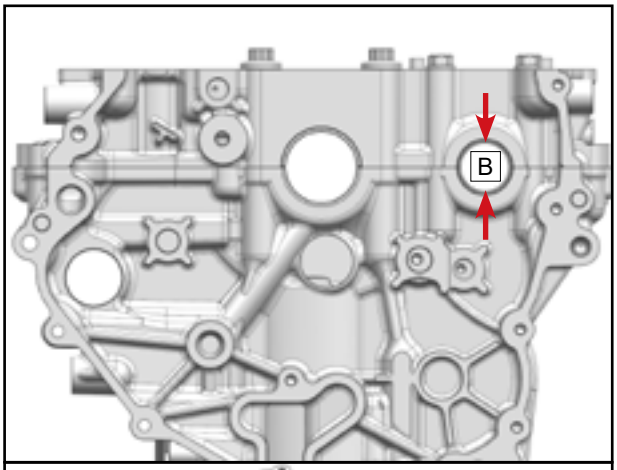

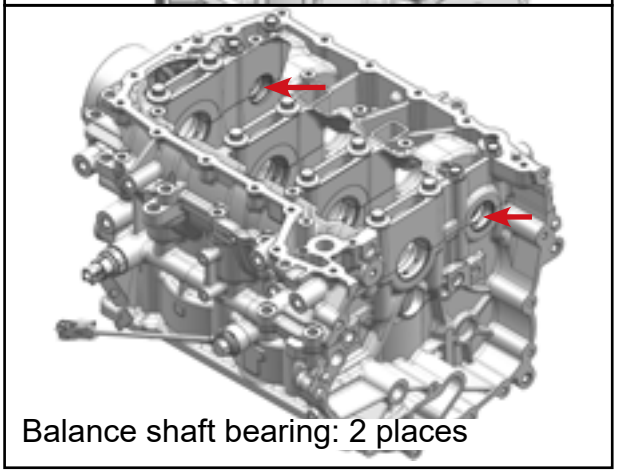

Balance shaft bearing: 2 places

© CFMOTO Powersports, Inc. This manual is subject to all applicable copyright laws. Reproduction or duplication in any form, whole or in part, is strictly prohibited.

5.4.2 Selecting Crankshaft Bearings and Balance Shaft Bearings

Crankshaft Main Bearing Seat Hole

Diameter 1 see table below.

Crankshaft Main Bearing Seat Hole (New)	
Mark	DIA 1
1	42.000 ~ 42.005 mm (1.65354 ~ 1.65374 in.)
2	42.005 ~ 42.010 mm (1.65374 ~ 1.65394 in.)
3	42.010 ~ 42.015 mm (1.65394 ~ 1.65413 in.)

A: Lower crankcase
B: Cylinder body

Group marks engraved on the cylinder body as shown from right to left are the group marks of crankshaft journal holes H1, H2, H3 and H4.

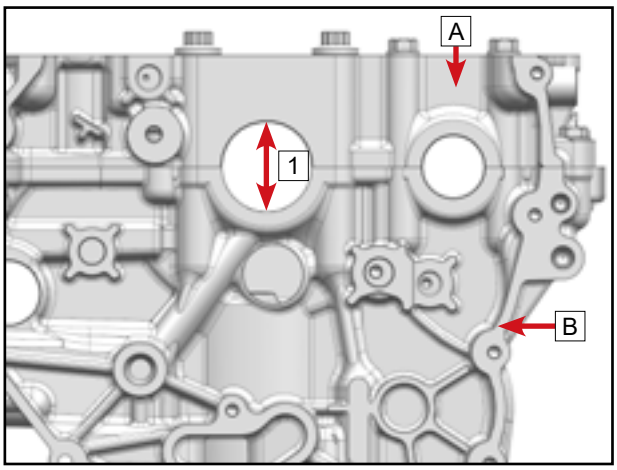

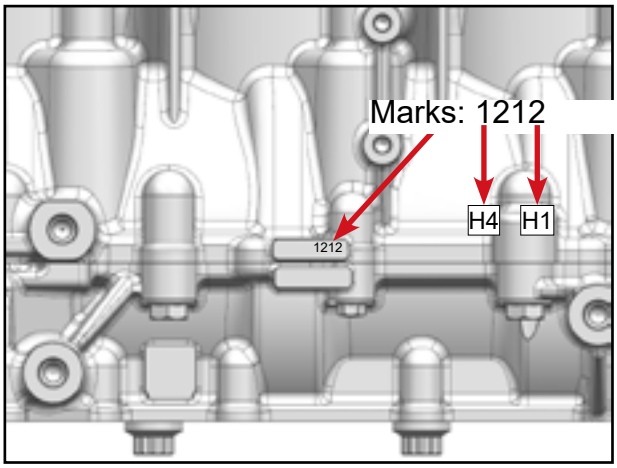

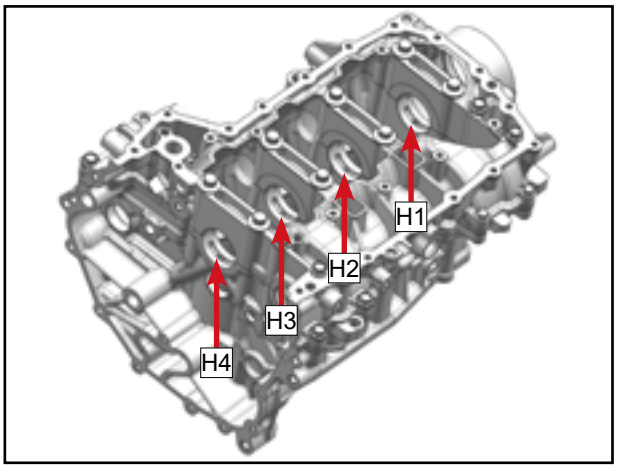

Balance Shaft Bearing Seat Hole

Diameter 1 see table below.

Balance shaft Bearing Seat Hole (New)	
Mark	DIA 1
A	29.000 ~ 29.007 mm (1.14173 ~ 1.14201 in.)
B	29.007 ~ 29.013 mm (1.14201 ~ 1.14224 in.)

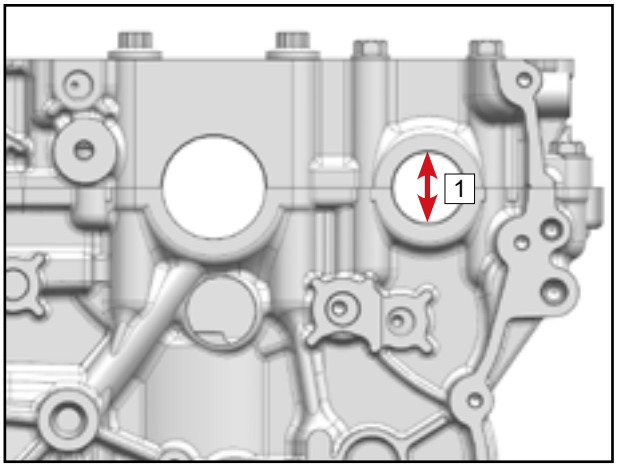

© CFMOTO Powersports, Inc. This manual is subject to all applicable copyright laws. Reproduction or duplication in any form, whole or in part, is strictly prohbited.

Group marks engraved on the lower crankcase as shown from right to left are the group marks of balance shaft journal holes H1 and H2.

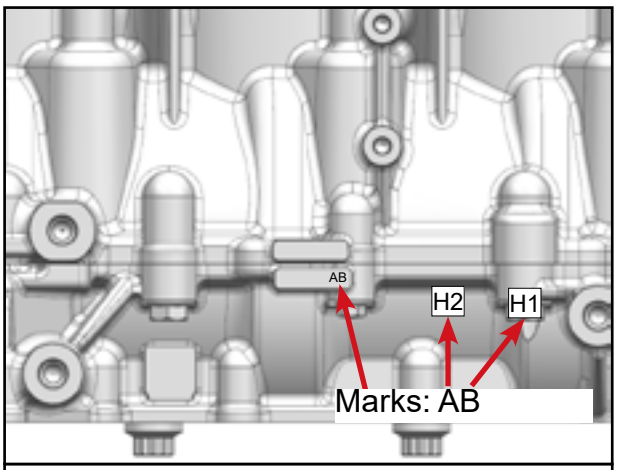

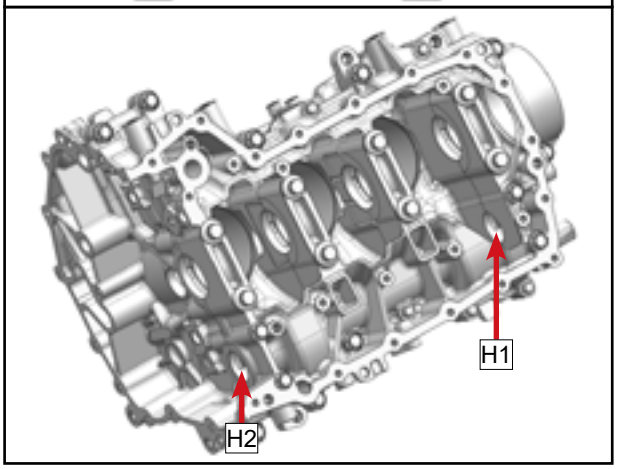

Crankshaft Main Journal

Diameter D see table below.

Crankshaft Main Journal (New)	
Mark	DIA D
1	37.985 ~ 37.990 mm (1.49547 ~ 1.49567 in.)
2	37.990 ~ 37.995 mm (1.49567 ~ 1.49587 in.)
3	37.995 ~ 38.000 mm (1.49587 ~ 1.49606 in.)

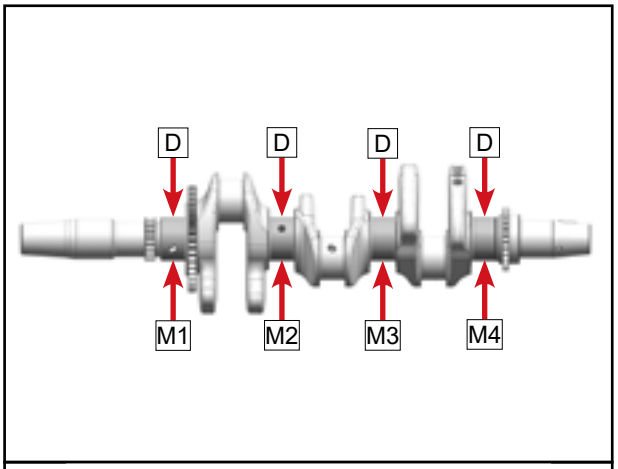

Group marks engraved as shown on the right, from left to right are the group marks of main journal M1, M2, M3 and M4.

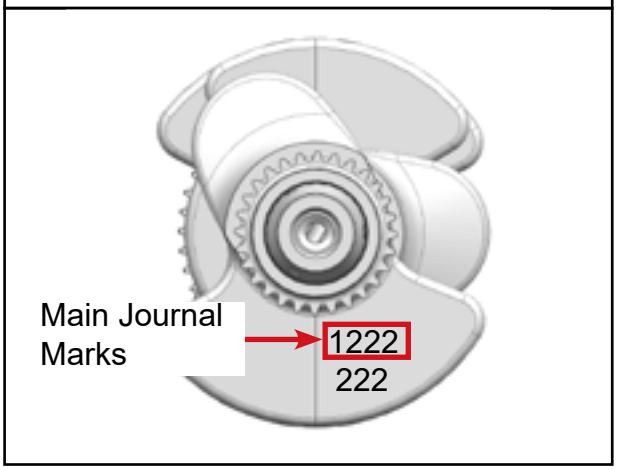

© CFMOTO Powersports, Inc. This manual is subject to all applicable copyright laws. Reproduction or duplication in any form, whole or in part, is strictly prohibited.

Measure crankshaft main journal diameter [D], if less than service limit, replace with new parts.

Crankshaft Main Journal DIA [D]	
Service Limit	37.960 mm (1.49449 in.)

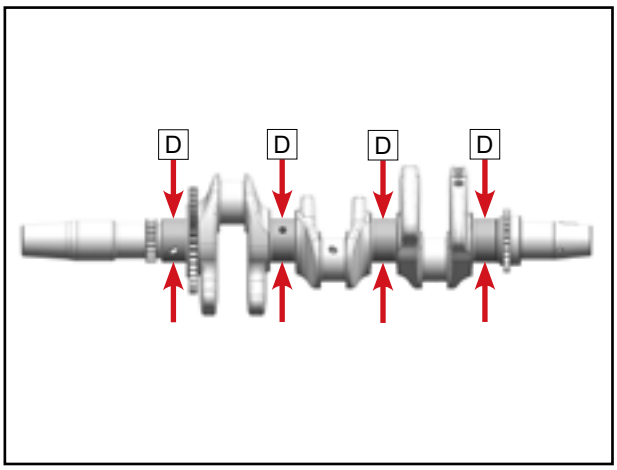

Crankshaft Assembly Grouping

Check the tooth surfaces of the balance shaft drive gear [1], oil pump drive gear [2] and timing drive sprocket [3] for excessive wear or other damage. If damaged, replace with a new crankshaft assembly.

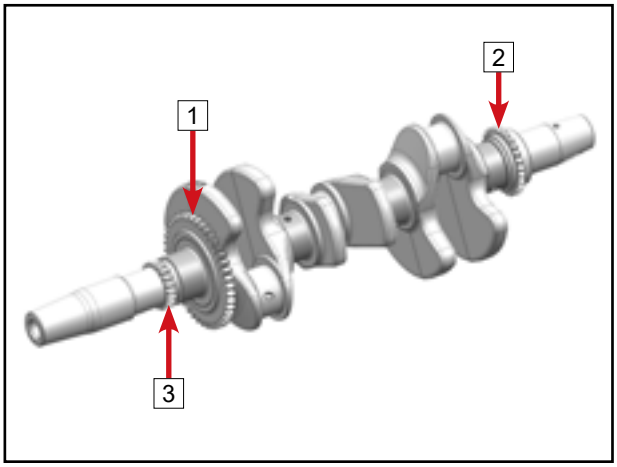

The crankshaft assembly is divided into groups A and B according to the balance shaft drive gear [1]. Group marking (A or B) is engraved on the balance shaft drive gear.

The crankshaft assembly and the balance shaft assembly are paired and assembled in the following table:

IF: Crankshaft Assembly Group Mark	Balance Shaft Assembly Group Mark IS:
A	B
B	A

Balance Shaft Journal

Diameter [E] see table below.

Balance Shaft Journal Diameter (New)	
Mark	DIA [E]
1	25.987 ~ 25.993 mm (1.02311 ~ 1.02335 in.)
2	25.993 ~ 26.000 mm (1.02335 ~ 1.02362 in.)

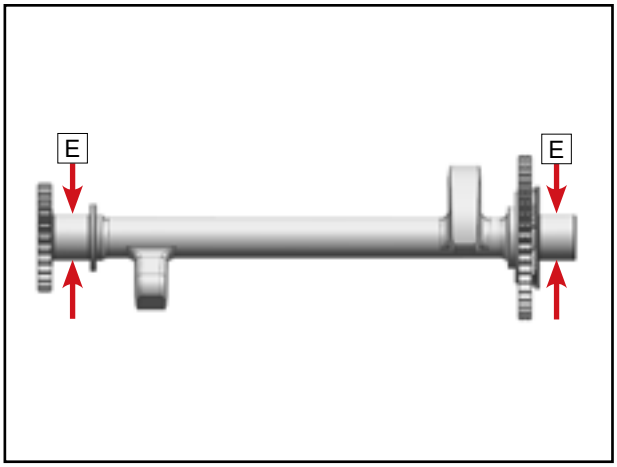

© CFMOTO Powersports, Inc. This manual is subject to all applicable copyright laws. Reproduction or duplication in any form, whole or in part, is strictly prohibited.

Group marks engraved as shown on the right, from left to right are the group marks of journals J1 and J2.

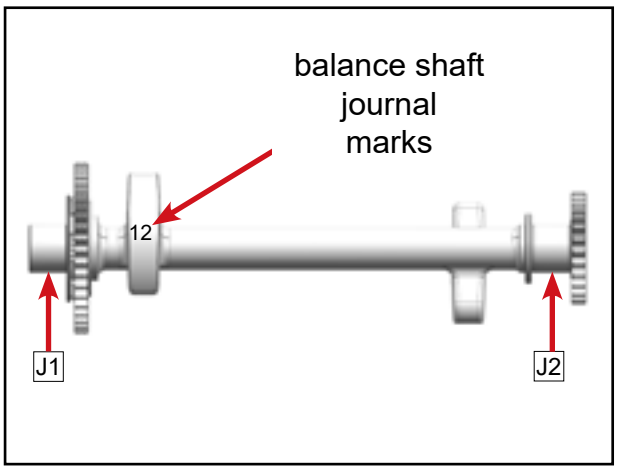

Measure balance shaft journal diameter E. If less than service limit, replace with new parts.

Balance Shaft Journal DIA E	
Service Limit	25.960 mm (1.02205 in.)

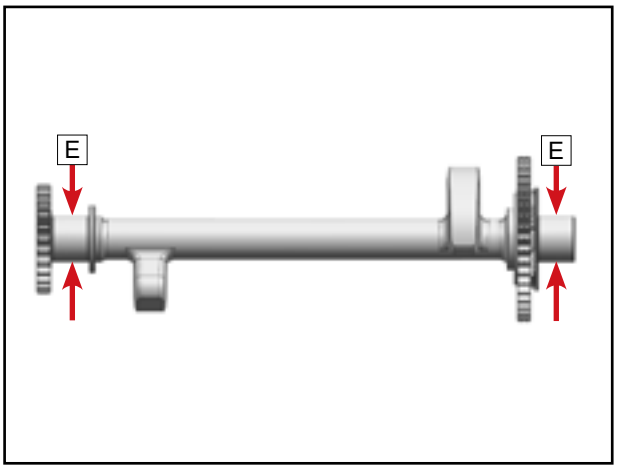

Balance Shaft Assembly Grouping

Check the tooth surfaces of the balance shaft driven gear 1 and water pump drive gear 2 for excessive wear or other damage. If damaged, replace with a new balance shaft assembly.

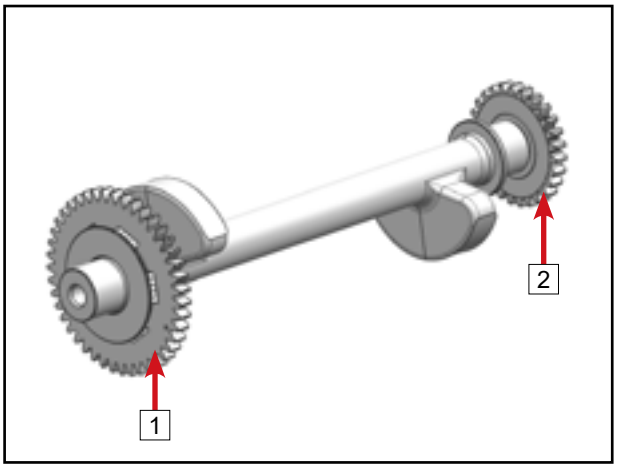

The balance shaft assembly is divided into groups A and B according to the balance shaft driven gear 1. Group marking (A or B) is engraved on the balance shaft driven gear.

The balance shaft assembly and the crankshaft assembly are paired and assembled in the following table.

IF: Balance Shaft Assembly Group Mark	Crankshaft Assembly Group Mark IS:
A	B
B	A

© CFMOTO Powersports, Inc. This manual is subject to all applicable copyright laws. Reproduction or duplication in any form, whole or in part, is strictly prohibited.

Main Plain Bearing

The main plain bearing center wall thickness [T] grouping is shown in the following table.

Main Plain Bearing (New)	
Color	Center Wall Thickness [T]
Red	1.994 ~ 1.997 mm (0.07850 ~ 0.07862 in.)
Green	1.991 ~ 1.994 mm (0.07839 ~ 0.07850 in.)
Black	1.988 ~ 1.991 mm (0.07827 ~ 0.07839 in.)

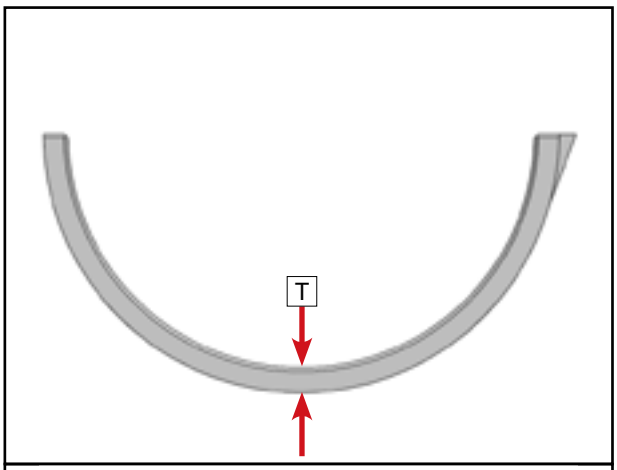

Upper main plain bearing



Lower main plain bearing (No groove)



Lower main plain bearing (With lubrication groove)



NOTE

The upper main plain bearings are provided with lubrication grooves and holes. They are classified by material into copper alloy shells and aluminum alloy shells. The copper alloy shell has a tin-plated, silver-white surface and is installed in the bearing seat on the CVT side of the cylinder body. The aluminum alloy shells are installed in the remaining bearing seats of the cylinder body.

NOTE

The lower main plain bearing with a lubrication groove is installed in the bearing seat on the CVT side of the lower crankcase.

Balance Shaft Plain Bearing

The balance shaft plain bearing center wall thickness [et] grouping is shown in the following table.

Balance Shaft Plain Bearing (New)	
Color	Center wall thickness [et]
Red	1.484 ~ 1.488 mm (0.05843 ~ 0.05858 in.)
Black	1.488 ~ 1.492 mm (0.05858 ~ 0.05874 in.)
Blue	1.492 ~ 1.496 mm (0.05874 ~ 0.05890 in.)

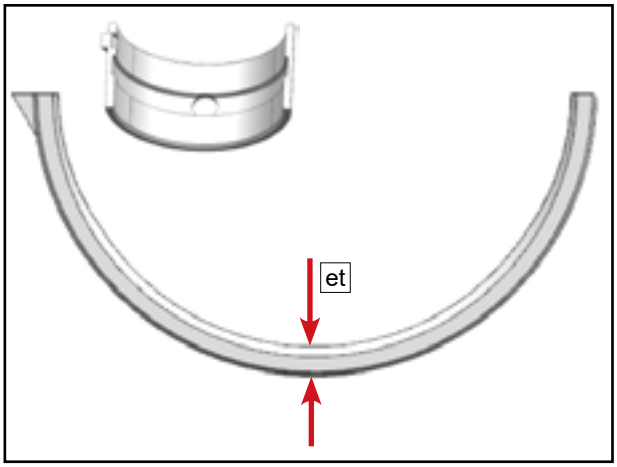

© CFMOTO Powersports, Inc. This manual is subject to all applicable copyright laws. Reproduction or duplication in any form, whole or in part, is strictly prohbited.

5.4.2.1 Plain Bearing Section Table

Select the main plain bearing according to following table.

Crankshaft Main Bearing Seat Hole Mark	Crankshaft Main Journal Mark	Main Plain Bearing (Upper&Lower) Color
3	1	Red
3	2	Red
3	3	Green
2	1	Red
2	2	Green
2	3	Black
1	1	Green
1	2	Black
1	3	Black

Select the balance shaft plain bearing according to following table.

Balance Shaft Bearing Seat Hole Mark	Balance Shaft Journal Mark	Balance Shaft Plain Bearing Color
A	1	Black
A	2	Red
B	1	Blue
B	2	Black

© CFMOTO Powersports, Inc. This manual is subject to all applicable copyright laws. Reproduction or duplication in any form, whole or in part, is strictly prohbited.

5.4.3 Crankshaft and Balance Shaft Plain Bearing Replacement

Remove the lower main plain bearings 1 and 2 from the lower crankcase.
Remove the balance shaft plain bearing 3 from the lower crankcase.
Clean the bearing seats.

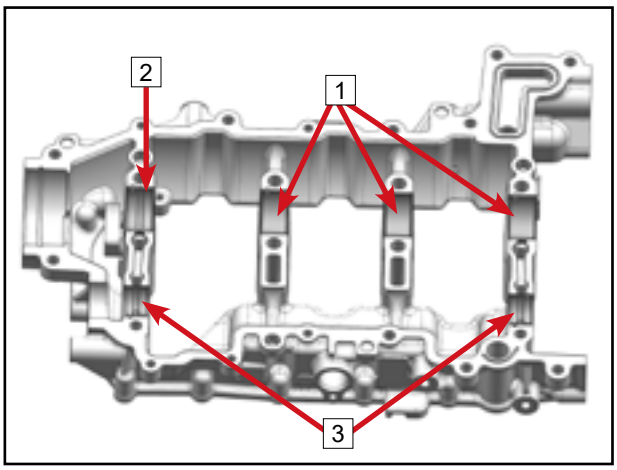

Remove the upper main plain bearing 1 and 2 from the cylinder body.
Remove the balance shaft upper plain bearings 3 from the cylinder body.
Clean the bearing seats.

Select the appropriate plain bearings. (Refer to section 5.4.2)
Install the new upper main plain bearings 1 and 2 on the cylinder body.

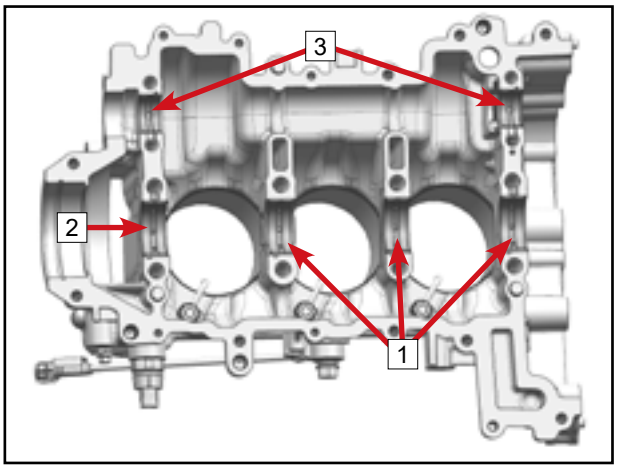

NOTE
The upper main plain bearings are provided with lubrication grooves and holes. When installing, do not confuse the upper main plain bearing 1 and 2 those made of different materials. The upper main plain bearing 2 is a copper bearing, with a tin-plated surface and a silver-white color, it is installed in the bearing housing on the CVT side of cylinder body. The upper main plain bearing 1 is made of aluminum alloy.

Install new balance shaft plain bearings 3 on the cylinder body.

Install new lower main plain bearings 1 and 2 on lower crankcase.

NOTE
The lower main plain bearing 2 with lubrication groove is installed in the CVT side bearing seat of the lower crankcase, as shown.

Install new balance shaft plain bearings 3 on the lower crankcase.

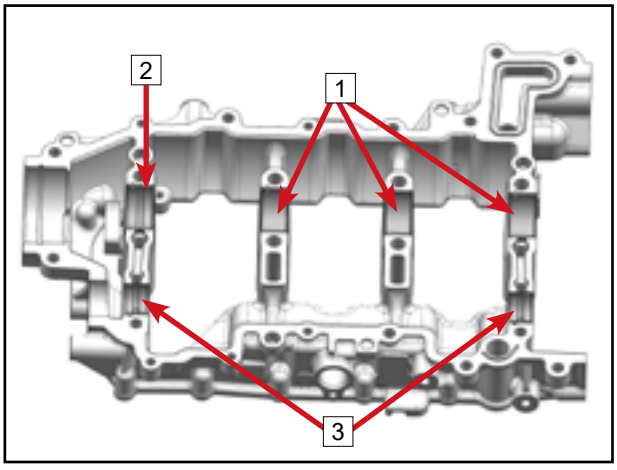

The following details should be paid attention to when installing plain bearings:

- The bearing must be flush with the split surface of the crankcase.
- The bearing positioning lip must fit with the bearing lock groove on the crankcase.

© CFMOTO Powersports, Inc. This manual is subject to all applicable copyright laws. Reproduction or duplication in any form, whole or in part, is strictly prohbited.

5.4.4 Lower Crankcase Inspection

Remove any remaining sealant and thoroughly clean the lower crankcase.

Check the lower crankcase 4 for cracks or other damage and replace if necessary.

NOTE
The lower crankcase and cylinder body are matched and must be replaced in complete sets.

Check the lower main plain bearings 1 and 2 and balance shaft plain bearings 3 for damage, scratches or excessive wear. If damaged, replace.

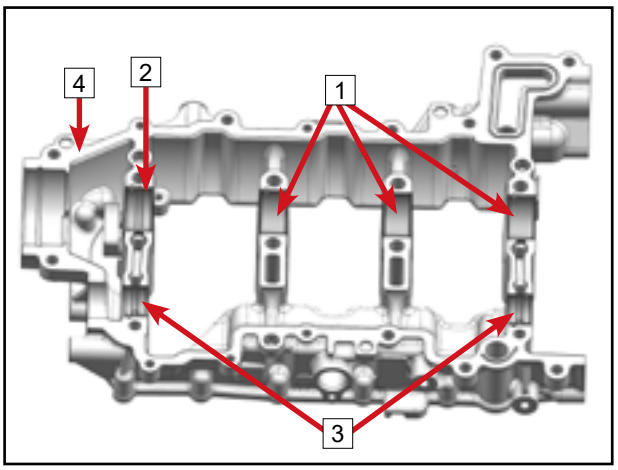

Chain Guard

Inspection

Check the chain guard 2 for excessive wear, cracking or deformation. Replace if necessary.

Removal

NOTE
If there is no need to replace the chain guard, it is not recommended to remove it.

Remove screw 1.

Remove chain guard 2.

Installation

Install chain guard 2.

Apply 243 thread locker to the screw 1.

Install screw 1 and tighten to specified torque.

Chain Guard Screw 1	
Torque	4 N•m (2.95 ft-lb.)

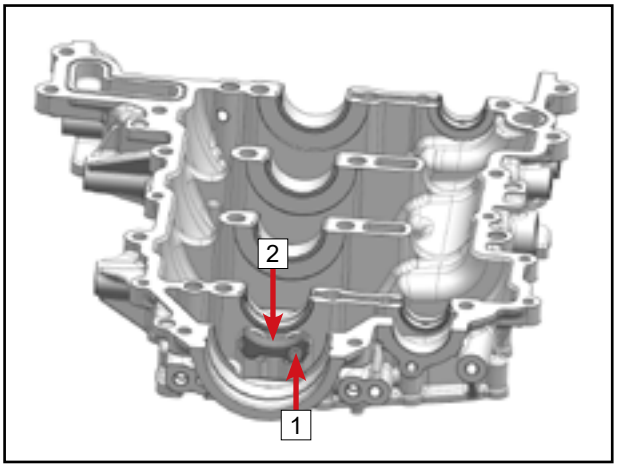

5.4.5 Cylinder Body Inspection

Check the cylinder body 4 for cracks or other damage and replace if necessary.

NOTE
The lower crankcase and cylinder body are matched and must be replaced in complete sets.

Check the upper main plain bearings 1 and 2 and balance shaft plain bearings 2 for damage, scratches or excessive wear. If damaged, replace.

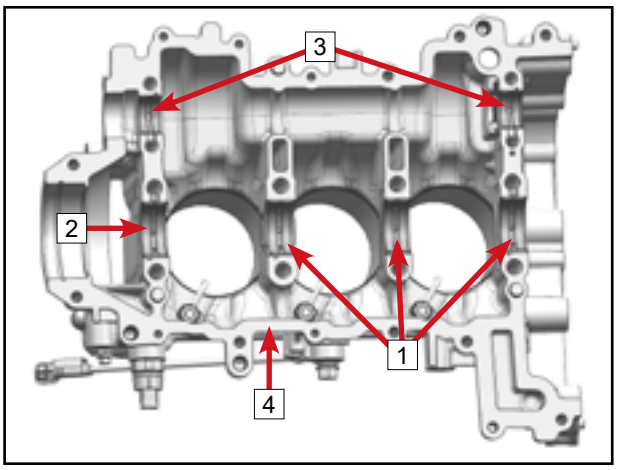

© CFMOTO Powersports, Inc. This manual is subject to all applicable copyright laws. Reproduction or duplication in any form, whole or in part, is strictly prohibited.

Water Jacket Partition
Inspection
Check the water jacket partition for damage. Replace it if necessary.
Removal

NOTE
If there is no need to remove the water jacket partition, it is not recommended to remove it.

Remove the water jacket partition 1.

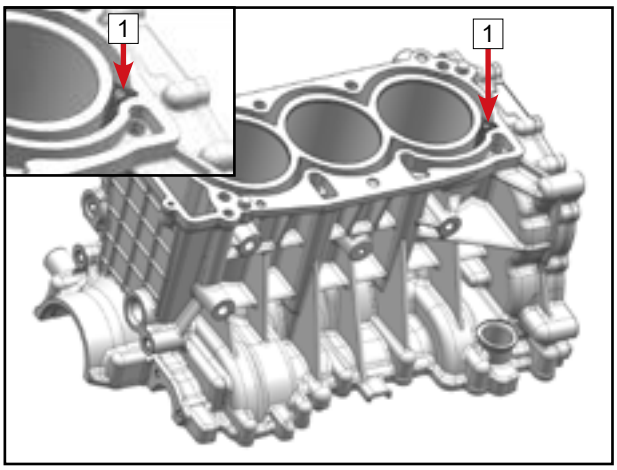

Knock Sensor
Removal
Remove bolt 1.
Remove knock sensor 2.

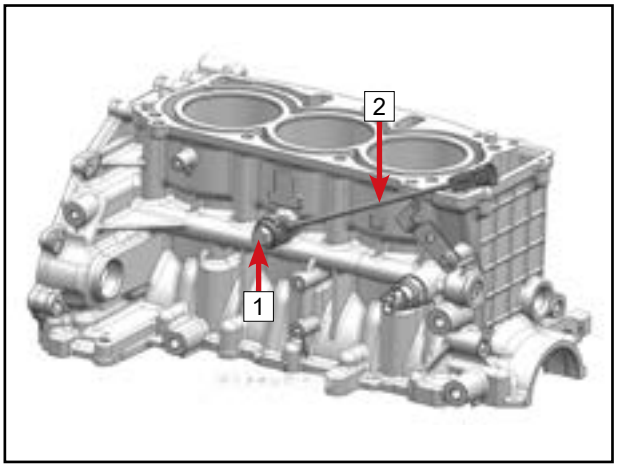

Oil Pressure Switch
Removal
Remove oil pressure switch 1.

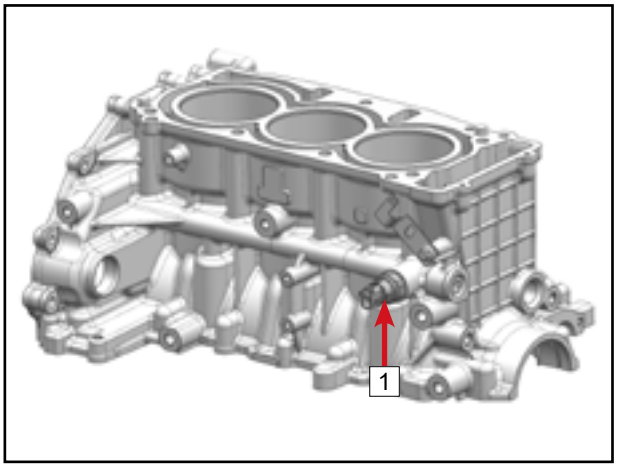

Cable Bracket
Removal
Remove bolt 1.
Remove cable bracket 2.
Inspection
Check cable bracket 2 for damage. Replace if damage is found.

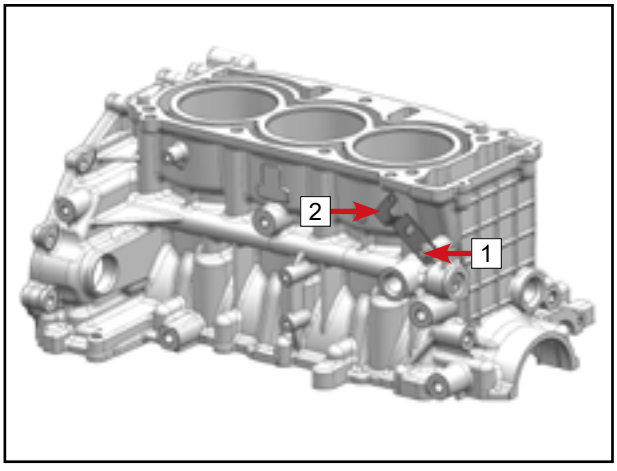

© CFMOTO Powersports, Inc. This manual is subject to all applicable copyright laws. Reproduction or duplication in any form, whole or in part, is strictly prohibited.

Piston Cooling Nozzle Assembly
Removal
Remove the piston cooling nozzles 1.
Inspection
Inspect the piston cooling nozzle assembly for damage. If damaged, replace.
Blow nozzles with compressed air to make sure they are not clogged.

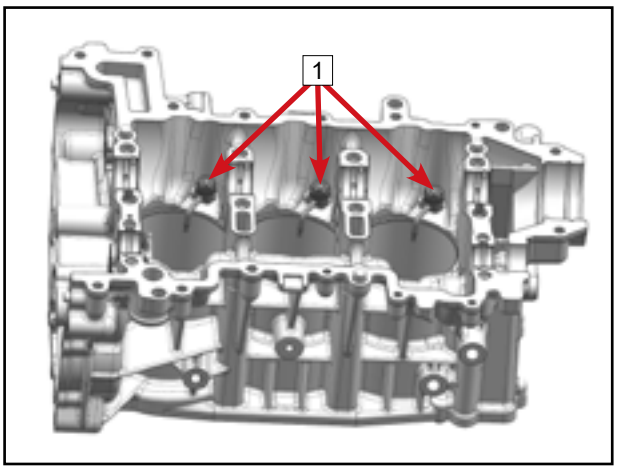

Cylinder Body Reassembly
Remove any remaining sealant and thoroughly clean the cylinder body before assembly.
Piston Cooling Nozzle Assembly

NOTE
All three piston cooling nozzles operate in the same way. When installing, align plane A with plane B as shown.

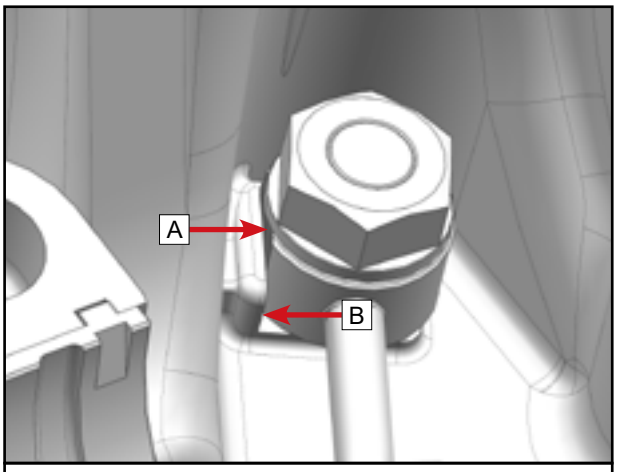

Install piston cooling nozzles 1 in the cylinder body and tighten the bolts to the specified torque.

Piston Cooling Nozzle Bolt	
Torque	20 N•m (14.7 ft-lb.)

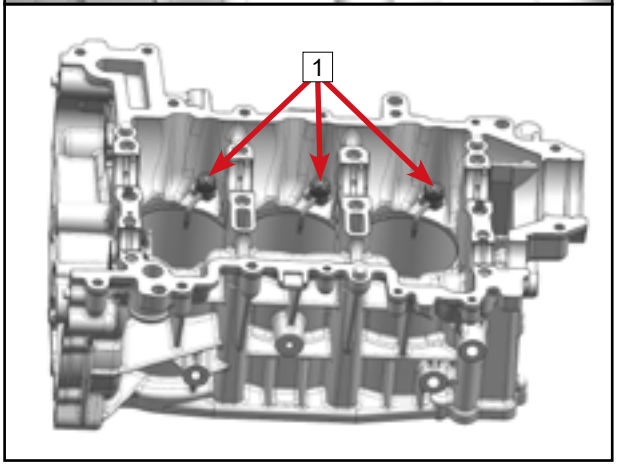

Cable Bracket
Place the cable bracket 2 in place.
Install bolt 1 and tighten to specified torque.

Cable Bracket Bolt 1	
Torque	10 N•m (7.3 ft-lb.)

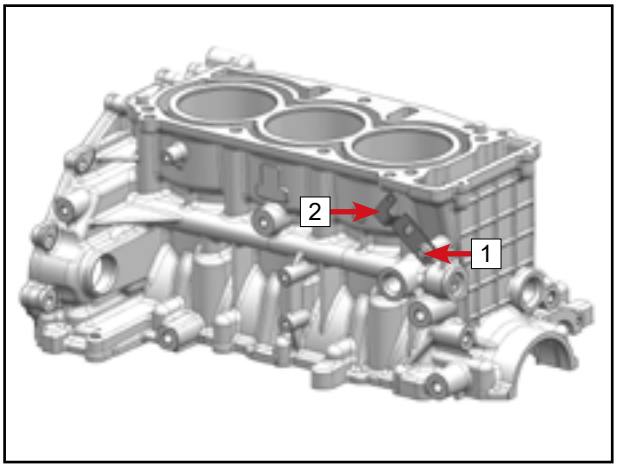

© CFMOTO Powersports, Inc. This manual is subject to all applicable copyright laws. Reproduction or duplication in any form, whole or in part, is strictly prohibited.

Oil Pressure Switch

Apply an appropriate amount of 567 thread sealant to oil pressure switch 1.
Install oil pressure switch 1 and tighten to specified torque.

Oil Pressure Switch 1	
Torque	20 N•m (14.7 ft-lb.)

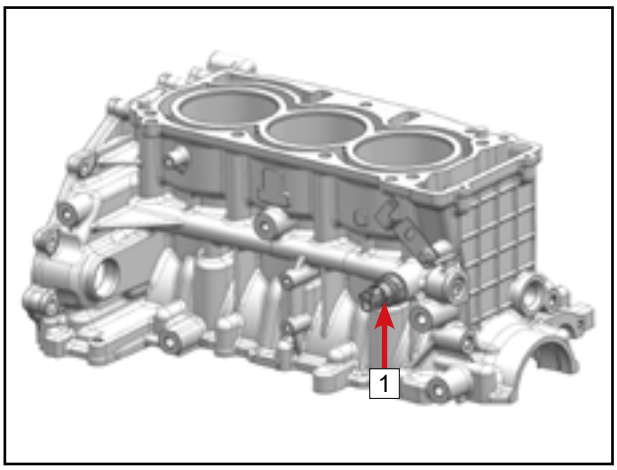

Knock Sensor

Place the knock sensor 2 in place.
Install bolt 1, and tighten to specified torque.

Knock Sensor Bolt 1	
Torque	20 N•m (14.7 ft-lb.)

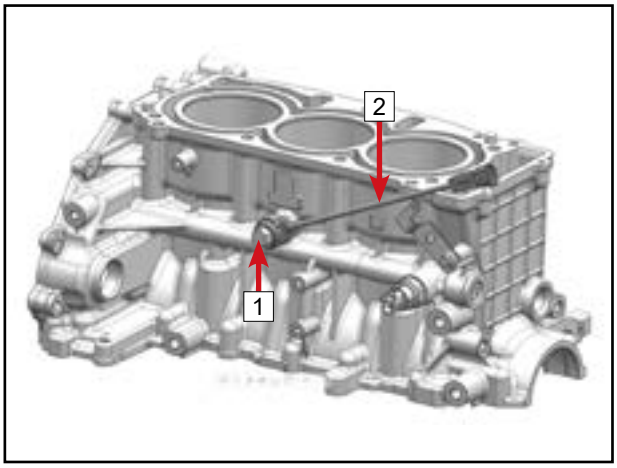

Water Jacket Partition

Install the water jacket partition 1, with the perforated end facing upwards.

NOTE
Make sure that the water jacket partition is located below the sealing surface A of cylinder body.

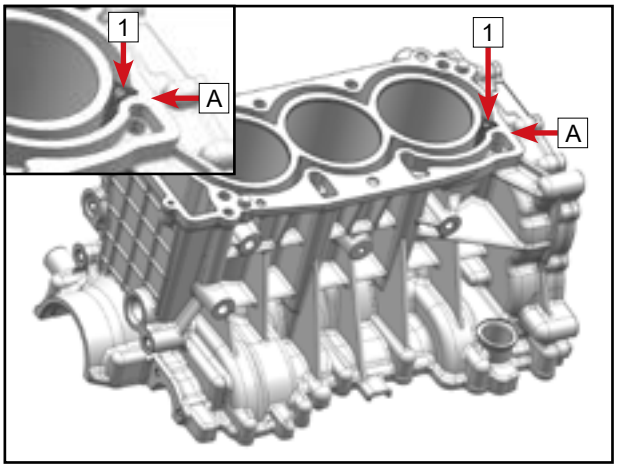

Main Oil Gallery Taper Plug (if removed)

Apply an appropriate amount of 567 thread sealant to main oil gallery taper plug 1.
Install main oil gallery taper plug 1 and tighten to specified torque.

Main Oil Gallery Taper Plug 1	
Torque	15 N•m (11.1 ft-lb.)

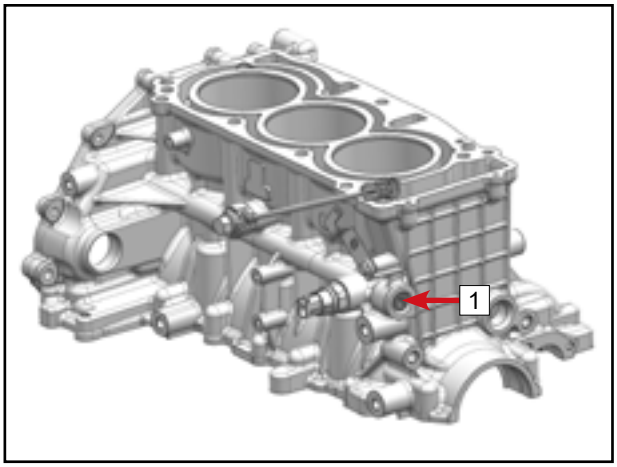

© CFMOTO Powersports, Inc. This manual is subject to all applicable copyright laws. Reproduction or duplication in any form, whole or in part, is strictly prohbited.

5.4.6 Oil Pan Inspection

Remove any remaining sealant and thoroughly clean the oil pan.

Check oil pan 1 for cracks or other damage, replace if necessary.

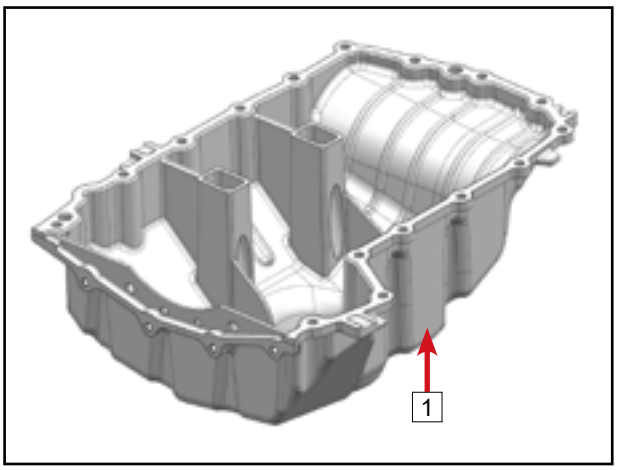

5.4.7 CVT Case Inspection

Thoroughly clean the CVT case.

Check the CVT case 1 for cracks or other damage. Replace if necessary.

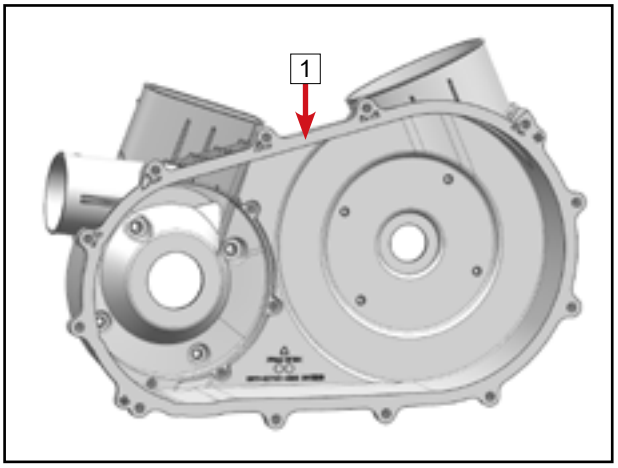

5.4.8 Magneto End Cover Disassembly/ Reassembly

Disassembly

Remove circlip for shaft 1.

Remove washer 2 and water pump gear 3.

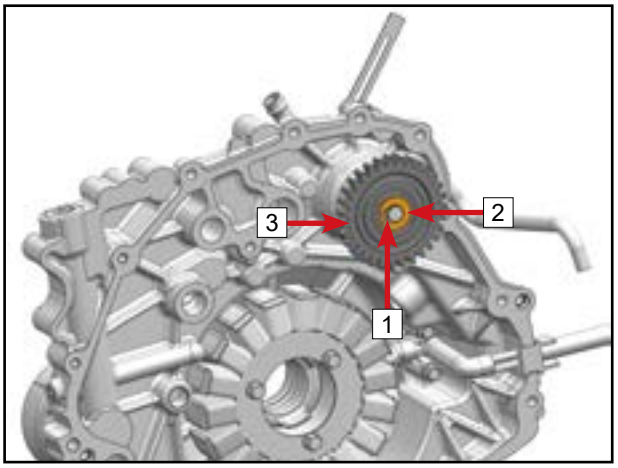

Remove cross pin 1.

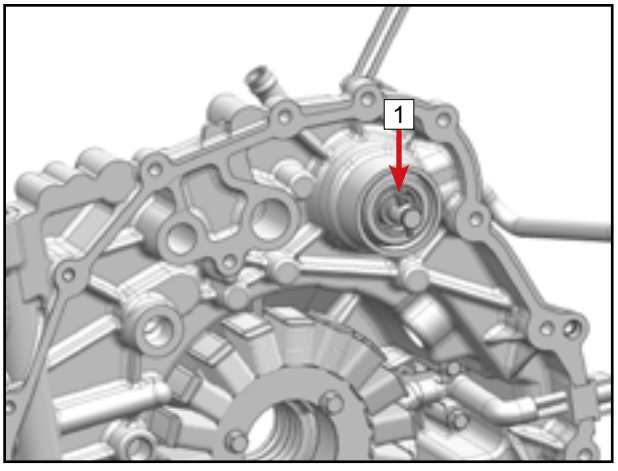

© CFMOTO Powersports, Inc. This manual is subject to all applicable copyright laws. Reproduction or duplication in any form, whole or in part, is strictly prohibited.

Cross diagonally loosen the bolts [1] then remove them.
Remove water pump assembly [2] and [3] wire clamp.

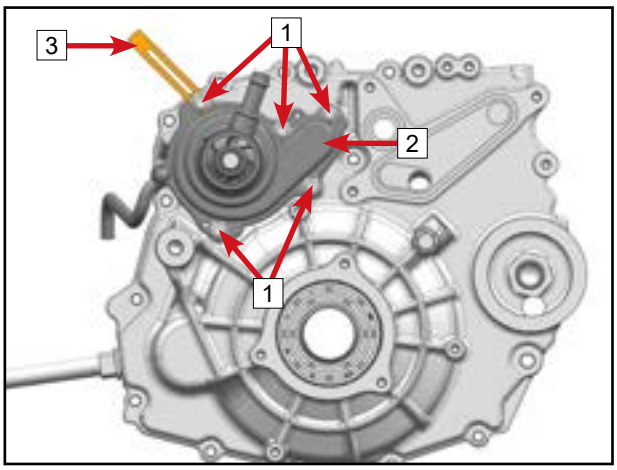

Remove oil filter mounting bolt [1]. (if necessary)

NOTE
The oil filter mounting bolt should remain in place if not damaged.

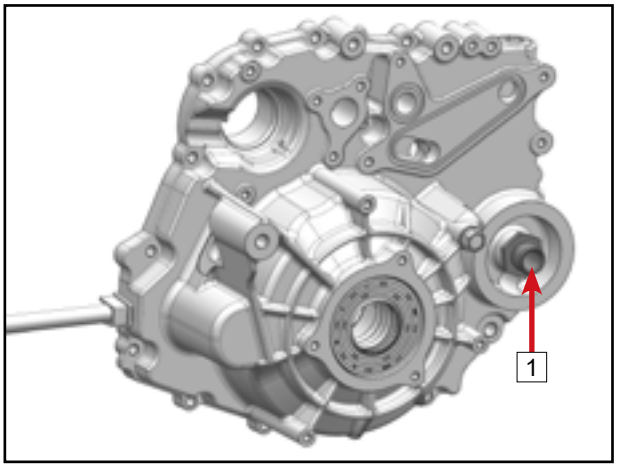

Remove bolts [1].
Remove cable press plate [2].

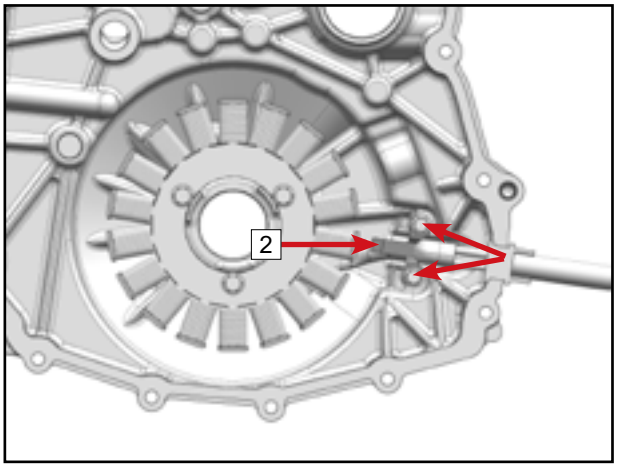

Remove bolts [1].
Remove magneto stator [2].

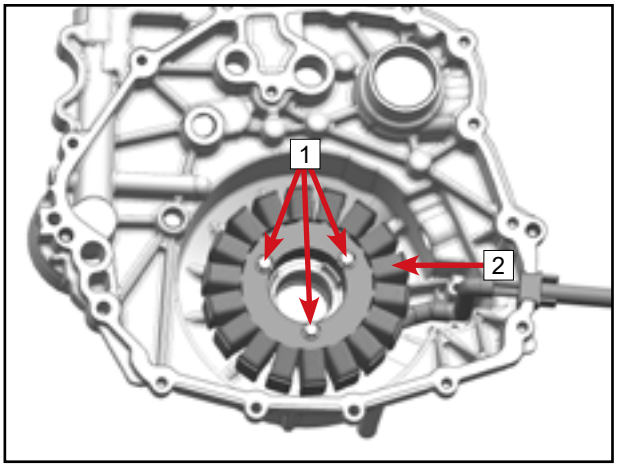

© CFMOTO Powersports, Inc. This manual is subject to all applicable copyright laws. Reproduction or duplication in any form, whole or in part, is strictly prohibited.

Inspection

Check the end cover [1] for cracks or other damage. Replace if necessary.
Check whether the oil seal [2] has become brittle, hard or otherwise damaged. Replace it when necessary.

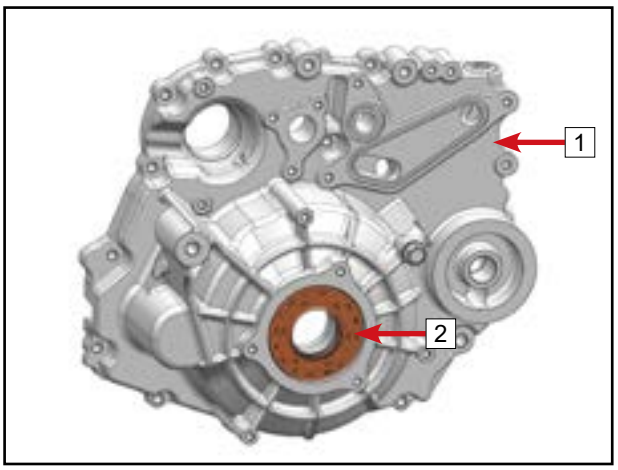

Check the magneto stator [1] for damage. Replace if necessary.
Inspect the metal coils for breakage, aging, or other damage. If necessary, replace the stator.

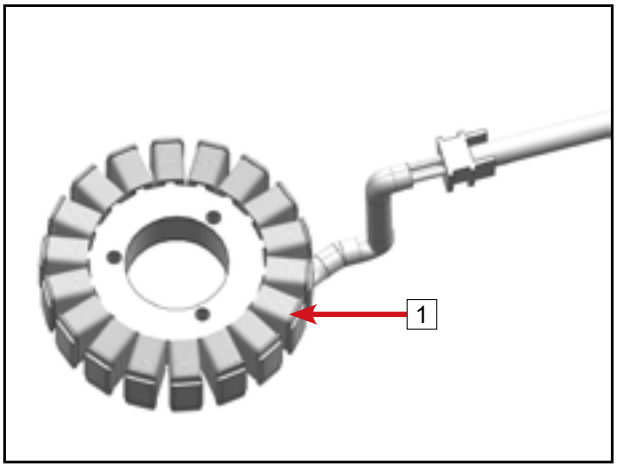

Inspect the water pump O-rings [1] and [2] for cracking, hardening, or other damage. Replace if necessary.
Check whether the overflow pipe [3] is cracked, aged or otherwise damaged. Replace it if necessary.

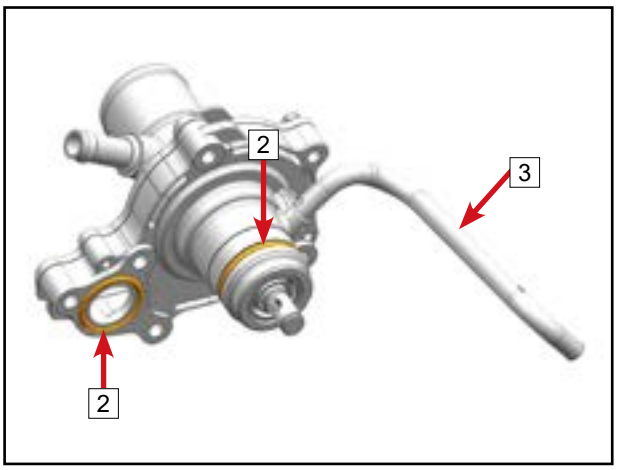

Check whether the water pump housing [1] and pump seat [2] are broken or damaged. If necessary, replace them.
Check whether the shaft [3] rotation is smooth. If the bearing is stuck, replace it with a new one.

Check if there is any liquid flowing out of the overflow pipe [4]. When the engine is running, if coolant continuously flows out, it indicates there is a problem with the water seal. If engine oil flows out, it indicates there is a problem with the oil seal.
In either scenario, the water pump housing must be replaced.

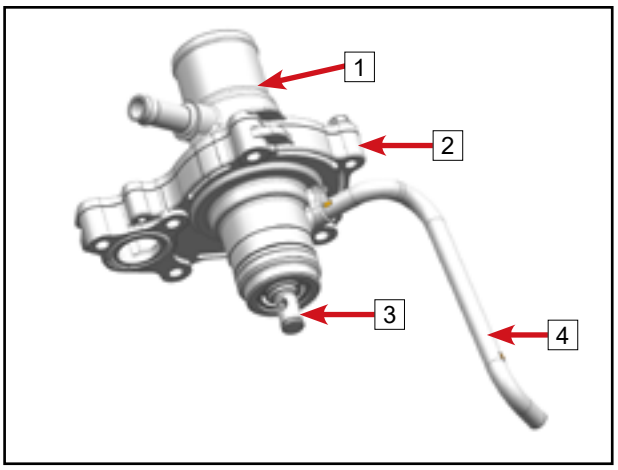

© CFMOTO Powersports, Inc. This manual is subject to all applicable copyright laws. Reproduction or duplication in any form, whole or in part, is strictly prohibited.

Water Pump Component Removal

Unplug the overflow pipe [2] from the water pump assembly [1].

Remove the O-ring [3] from the water pump assembly [1].

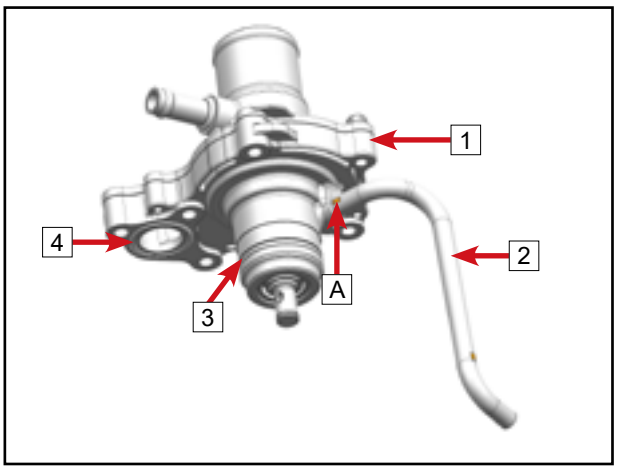

Disassemble the water pump assembly:

Remove O-ring [4].

Remove bolt [1].

Remove water pump housing [2].

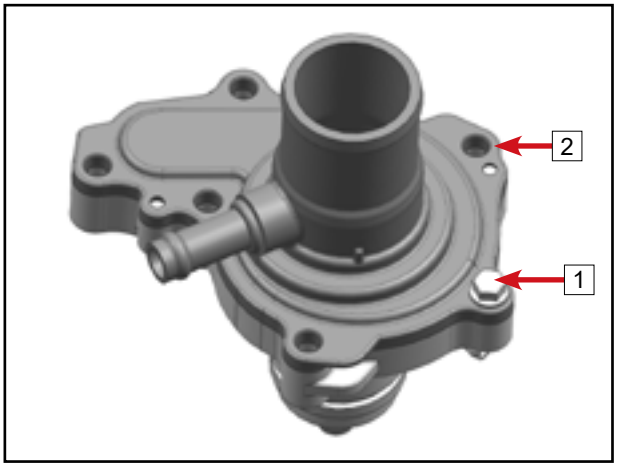

Remove gasket [1].

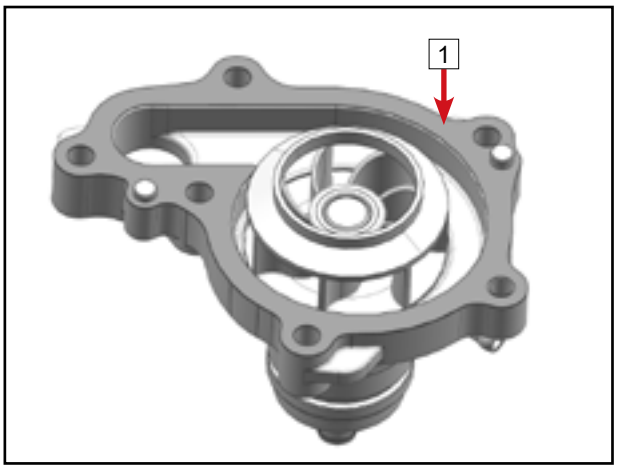

Check water pump impeller [1] for rupture or damage. Replace if necessary.

NOTE
The water pump assembly is a component with high sealing requirements. During maintenance, the pump housing, sealing gasket and O-rings can be replaced separately. The pump body must be replaced as a whole, or it is recommended to replace the entire water pump assembly.

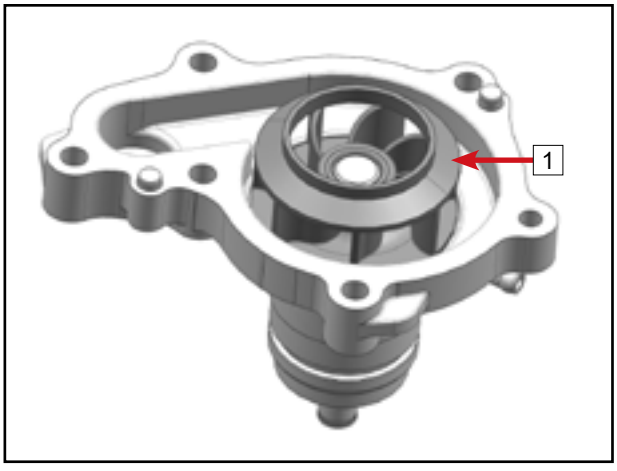

© CFMOTO Powersports, Inc. This manual is subject to all applicable copyright laws. Reproduction or duplication in any form, whole or in part, is strictly prohbited.

Assemble Water Pump Component

Install gasket [1].

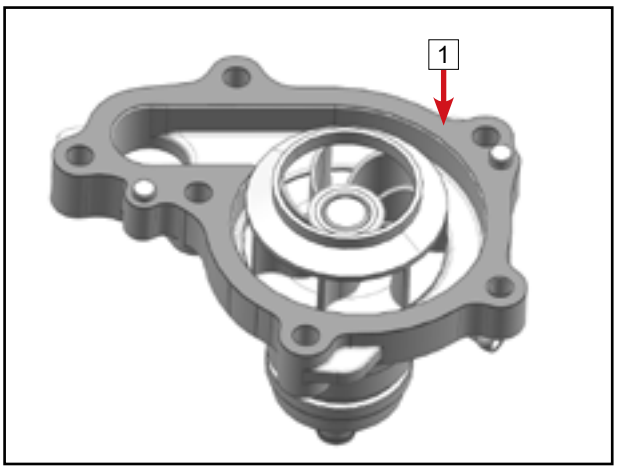

Install water pump housing [2].

Install bolt [1], tighten to specified torque.

Water Pump Housing Bolt [1]	
Torque	10 N•m (7.3 ft-lb.)

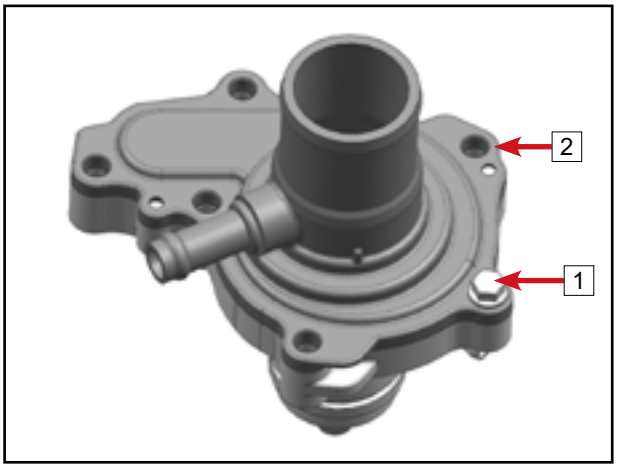

Install O-ring [4].

Install O-ring [3].

Install the overflow pipe [2] onto the water pump assembly [1], noting the orientation of mark [A] as shown in the image.

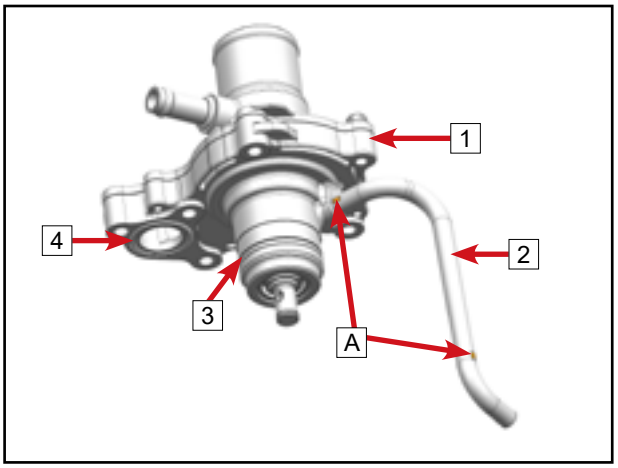

Magneto End Cover Reassembly

Apply 567 thread sealant to taper plug [1].

Install taper plug [1], and tighten to specified torque.

Taper Plug [1]	
Torque	40 N•m (29.5 ft-lb.)

NOTE
The taper plug should remain in place if not damaged.

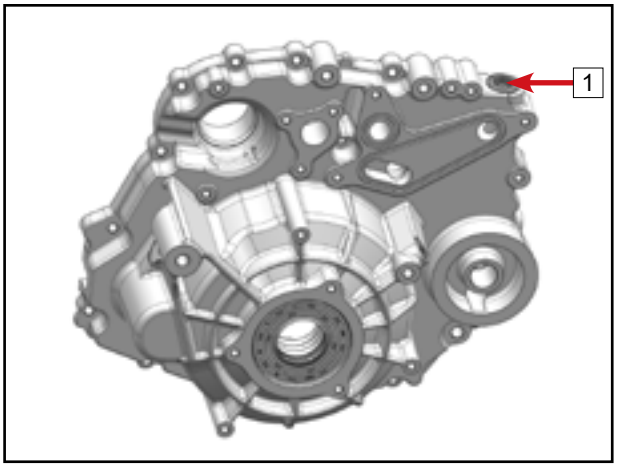

© CFMOTO Powersports, Inc. This manual is subject to all applicable copyright laws. Reproduction or duplication in any form, whole or in part, is strictly prohibited.

If removed, apply 567 thread sealant to screw plugs [1].
Install screws [1], and tighten to specified torque.

Screw [1]	
Torque	15 N•m (11.1 ft-lb.)

NOTE
The plug should remain in place if not damaged.

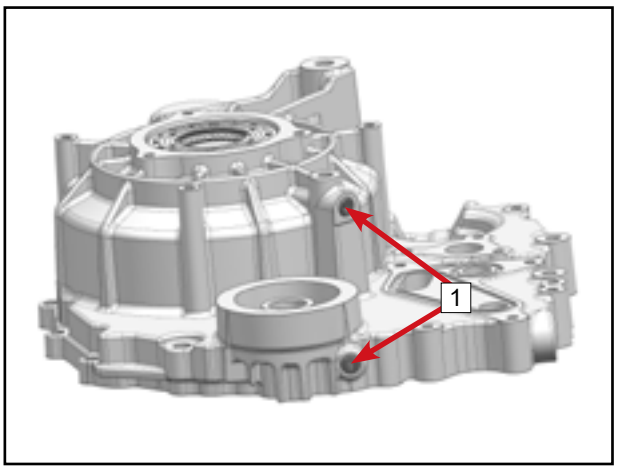

Ir removed, install bolt [1] and washer [2], then tighten to specified torque.

Bolt [1]	
Torque	27 N•m (19.9 ft-lb.)

NOTE
The bolt should remain in place if not damaged.

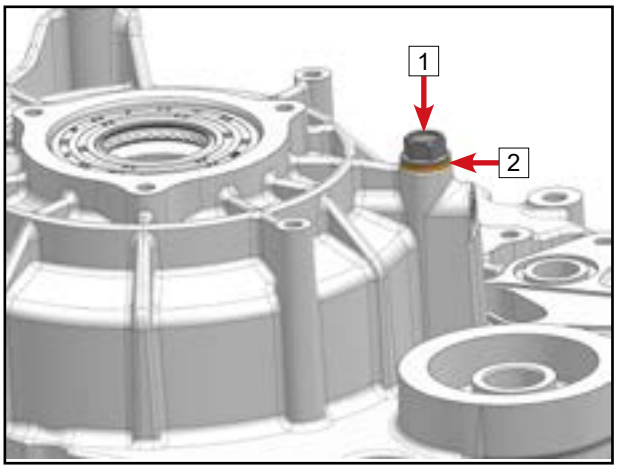

Place magneto stator [2] in place.
Apply 243 thread locker to bolts [1].
Install bolts [1], tighten to specified torque.

Magneto Stator Bolt [1]	
Torque	10 N•m (7.3 ft-lb.)

Route the stator wires in place.

CAUTION
When installing the stator, each part of the wire should be installed in the corresponding position as shown (wire reserved groove).

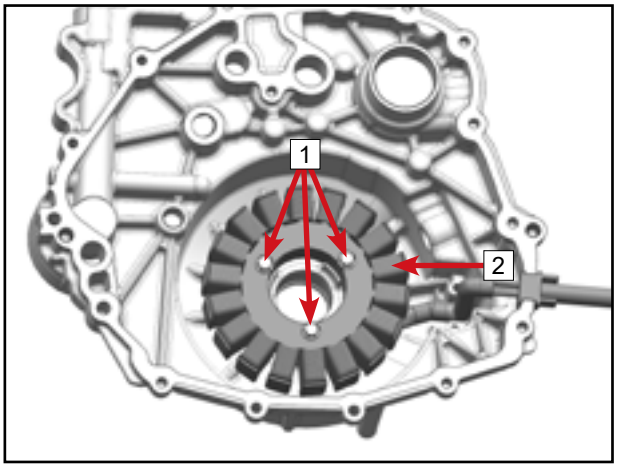

Install wire press plate [2].

NOTE
Make sure the stator wire is fully installed under the press plate.

Apply 243 thread locker to bolts [1].
Install bolts [1], tighten to specified torque.

Wire Press Plate Bolt [1]	
Torque	6 N•m (53 in-lb.)

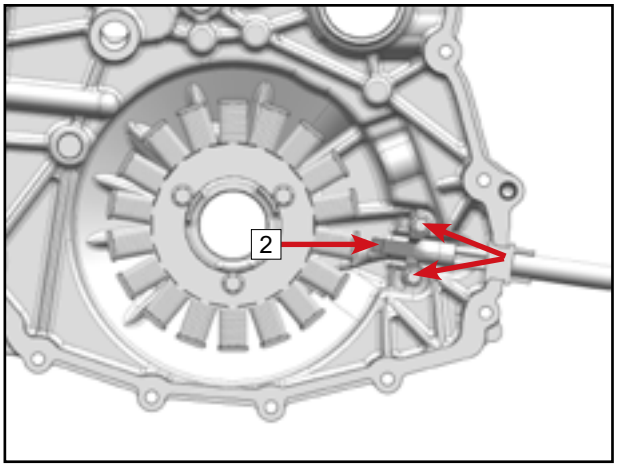

© CFMOTO Powersports, Inc. This manual is subject to all applicable copyright laws. Reproduction or duplication in any form, whole or in part, is strictly prohbited.

Ir removed, install oil filter mounting bolt [1], tighten to specified torque.

Oil Filter Mounting Bolt [1]	
Torque	30 N•m (22.1 ft-lb.)

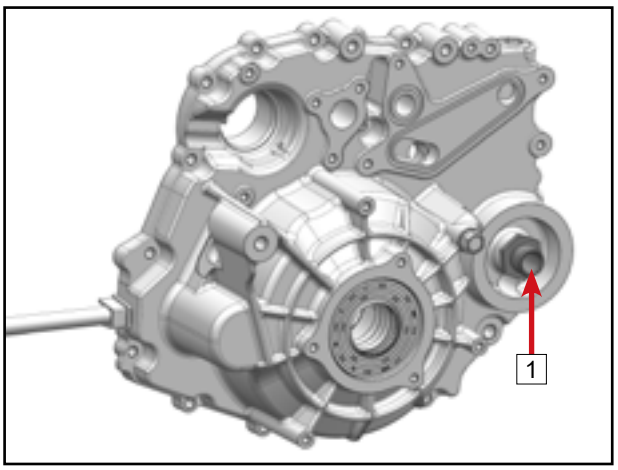

Make sure the O-rings [1] and [2] are installed on the pump assembly.
Coat O-ring [1] with engine oil.

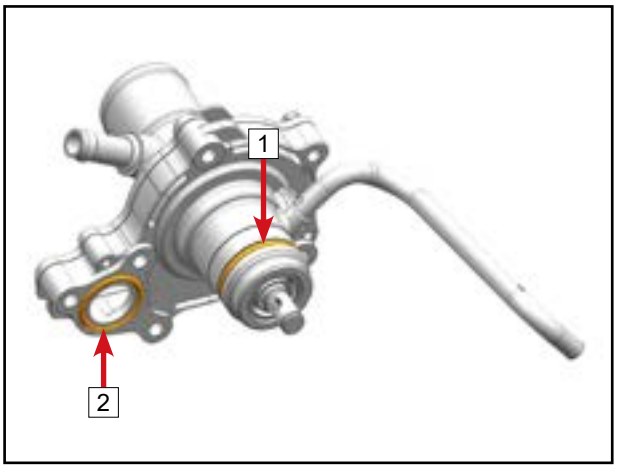

Align the protrusion [A] with the cover slot [B], and place the water pump component [2] in position.
Install bolts [1], diagonal cross tighten to specified torque.

Water Pump Bolt [1]	
Torque	10 N•m (7.3 ft-lb.)

[3]: clamp

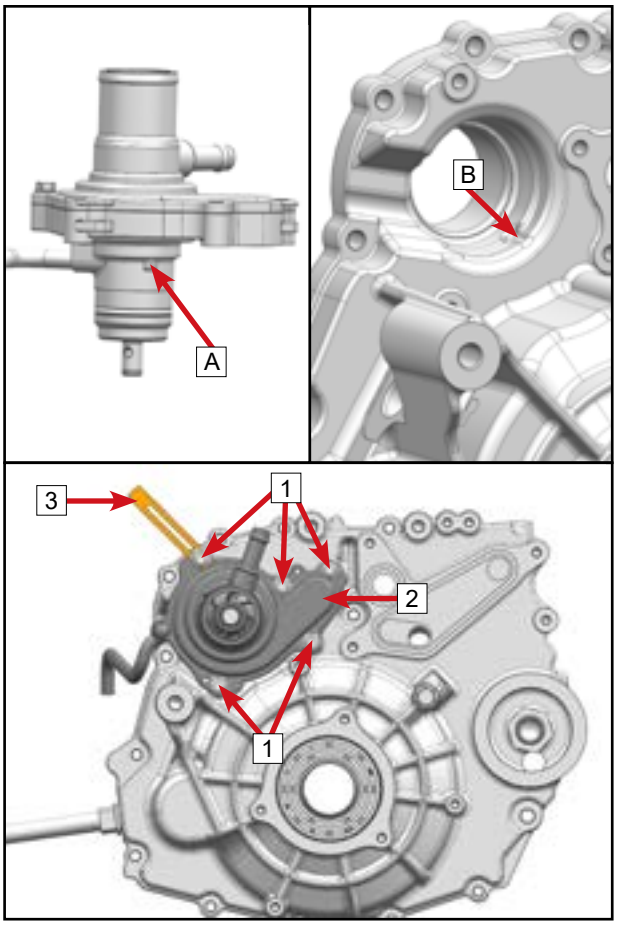

© CFMOTO Powersports, Inc. This manual is subject to all applicable copyright laws. Reproduction or duplication in any form, whole or in part, is strictly prohibited.

Install cross pin 1.

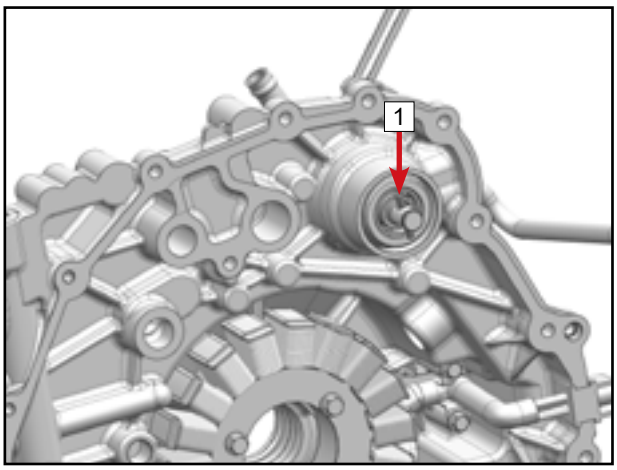

Install water pump gear 3, make sure the cross pin is stuck in the groove of the water pump gear.
Install washer 2.
Install new circlip for shaft 1.

NOTE
Removed circlips are not to be used again and must be replaced with new ones. When the circlip is installed, the side with rounded edges faces the pump gear.

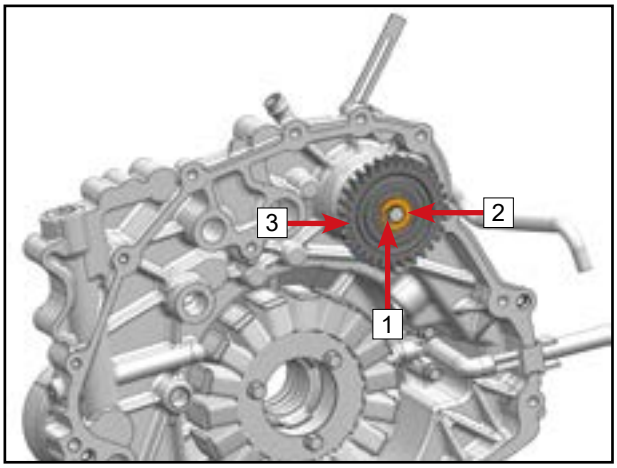

© CFMOTO Powersports, Inc. This manual is subject to all applicable copyright laws. Reproduction or duplication in any form, whole or in part, is strictly prohibited.

5.4.9 Cylinder Head Cover Disassembly/ Reassembly

Disassembly

Remove the cylinder head cover seal ring 1 from the cylinder head cover.

The dowel pins 2 are retained in the cylinder head cover.

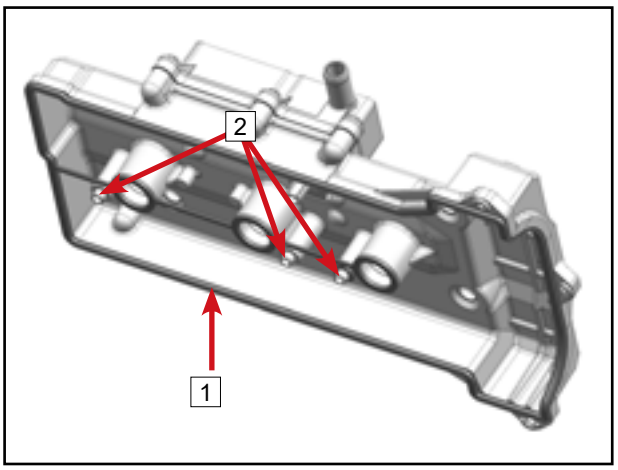

Loosen the crankcase breather bolts in a criss-cross method 1 then remove them.

Remove crankcase breather 2 and seal ring.

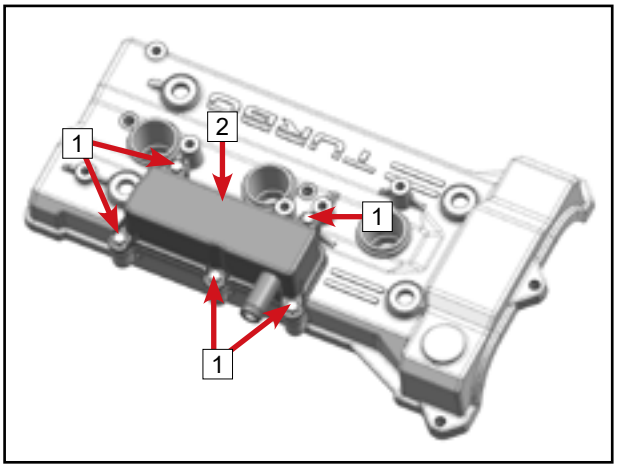

Inspection

Check the cylinder head cover 1 for ruptures or other damage. If damaged, replace.

Inspect cylinder head cover seal ring 2 for rupture, hardening, or other damage. If damaged, replace.

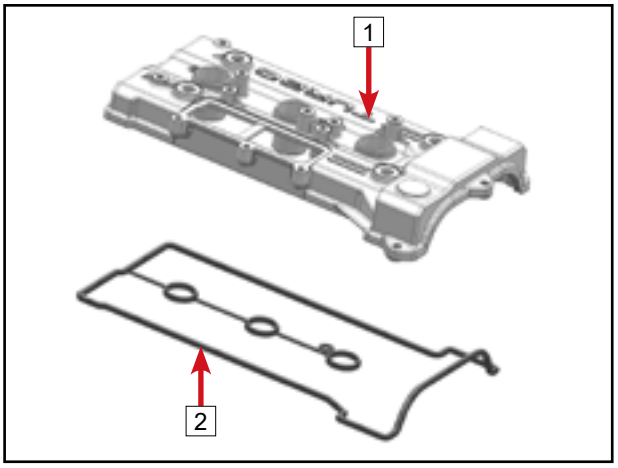

Check the crankcase breather 1 for rupture or other damage. Replace if necessary.

Inspect the seal ring 2 for rupture, hardening, or other damage. If damaged, replace.

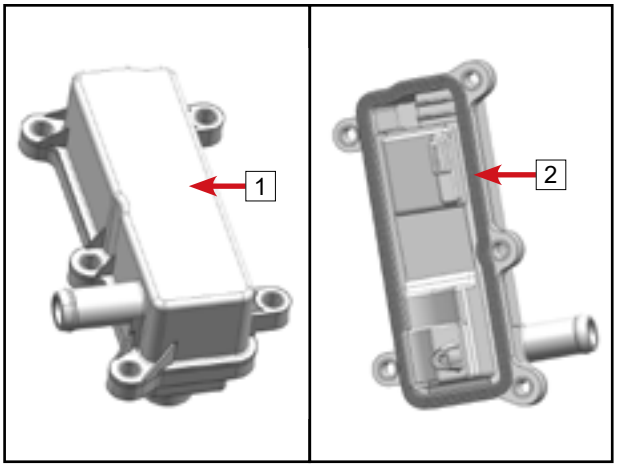

© CFMOTO Powersports, Inc. This manual is subject to all applicable copyright laws. Reproduction or duplication in any form, whole or in part, is strictly prohibited.

Assembly

Clean the sealing surface 1 thoroughly.

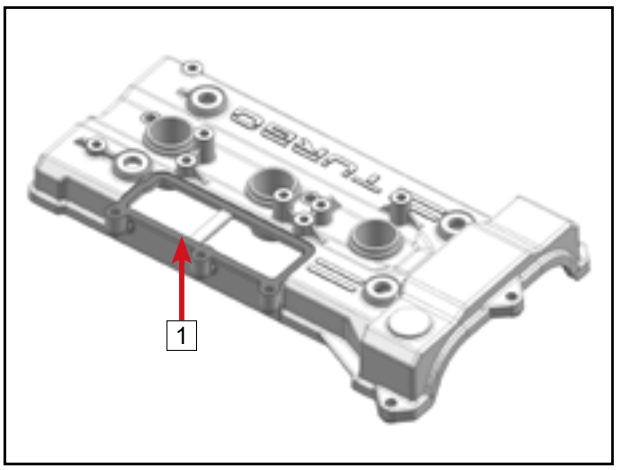

Install the crankcase breather 2 and seal ring.

Install bolts 1, tighten to specified torque in a criss-cross method.

Crankcase Breather Bolt 1	
Torque	10 N•m (7.3 ft-lb.)

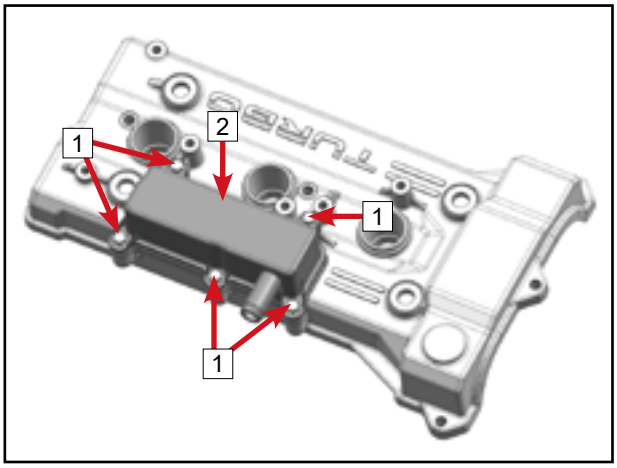

Install the following parts to the cylinder head cover:

— Dowel pin 2 (if removed)

— Cylinder head cover seal ring 1

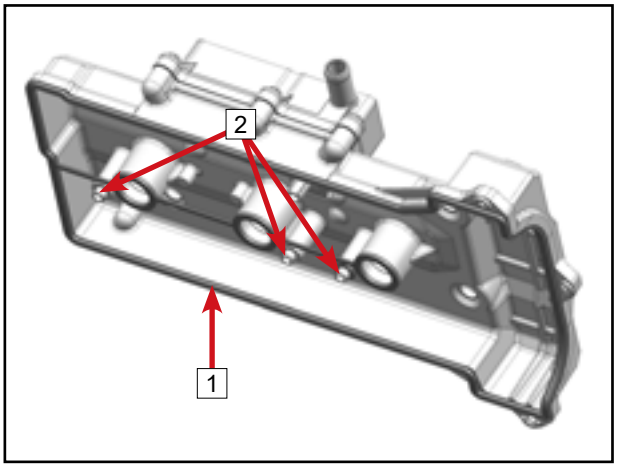

© CFMOTO Powersports, Inc. This manual is subject to all applicable copyright laws. Reproduction or duplication in any form, whole or in part, is strictly prohibited.

5.4.10 Cylinder Head
5.4.10.1 Cylinder Head Disassembly

NOTE
When removing the same multiple parts on the cylinder head, it is highly recommended to identify their location and record it. If a part is found to be damaged, it is easier to find out what caused the damage from the relevant part. In addition, because the old parts are well run in the process of engine operation, if their original position is guaranteed during reinstallation, the original good fit can be guaranteed.

Remove coolant temperature sensor 1.

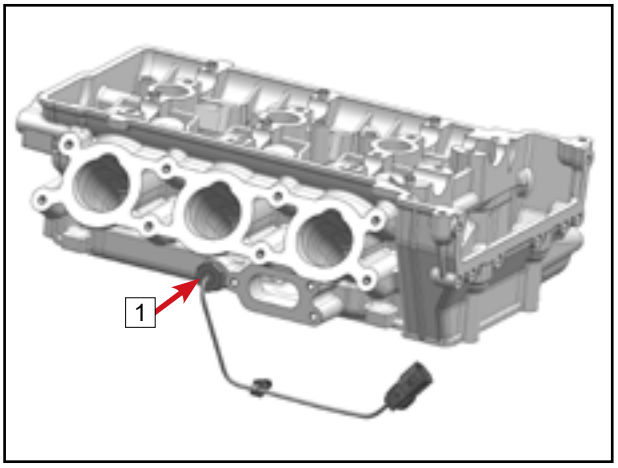

Remove valve tappets 1 .

NOTE
Record the position of the tappets so they can be quickly installed in their original position when reassembling.

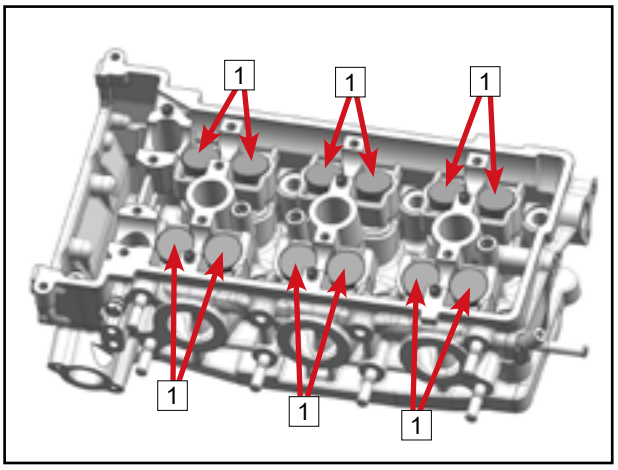

© CFMOTO Powersports, Inc. This manual is subject to all applicable copyright laws. Reproduction or duplication in any form, whole or in part, is strictly prohbited.

⚠WARNING

Always wear safety goggles when removing valve springs. Be careful when unlocking the valve, as parts may fly out under the strong pre-pressure of the spring.

Install a valve spring compression tool 3. Press the tool below against the valve face 1 and above against the valve spring upper seat 2.
Slowly rotate the lever at the top of the tool to compress the valve spring until the valve locks are fully exposed.

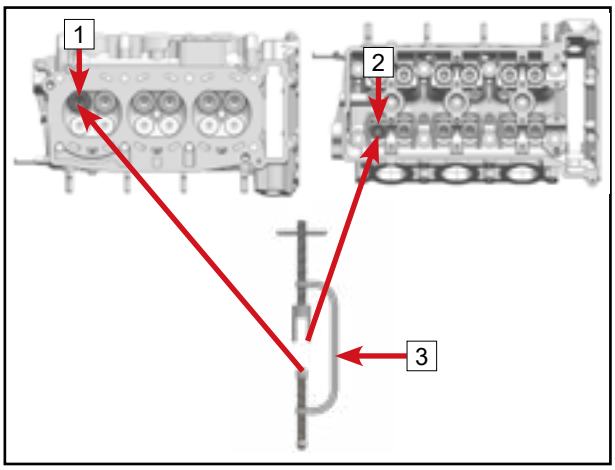

Remove valve locks 1.

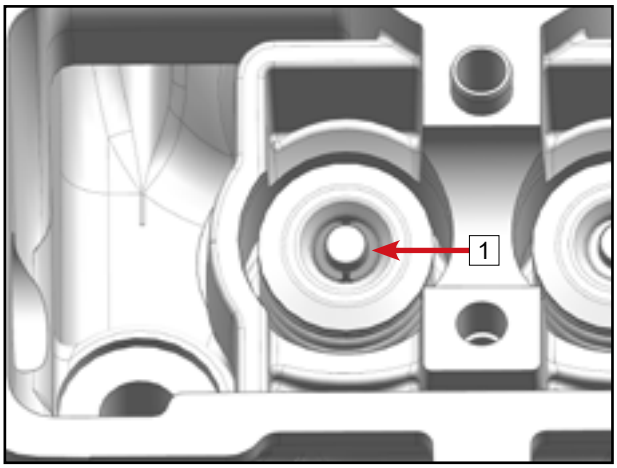

Loosen and remove valve spring compression tool.
Remove valve spring upper seat 1.
Remove valve spring 2.
Remove valve 3.

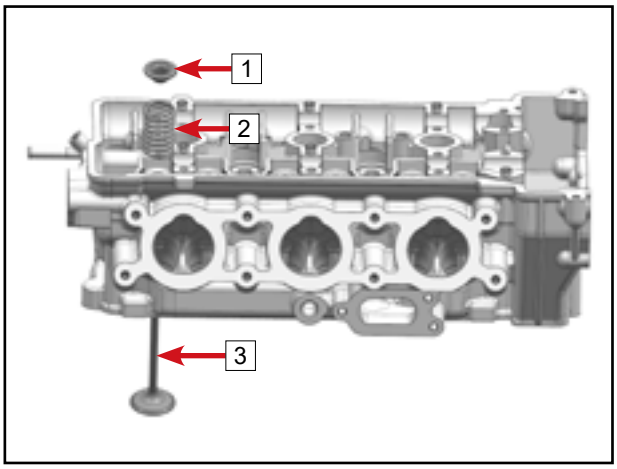

Remove valve oil seal 1 and discard it.
Remove valve spring lower seat 2.

Remove the remaining valves in the same method.

⚠WARNING

A new valve oil seal is required each time the valve is removed. The removed valves and related parts should be marked according to their location and placed one by one so that they can be quickly installed in their original position when reassembled.

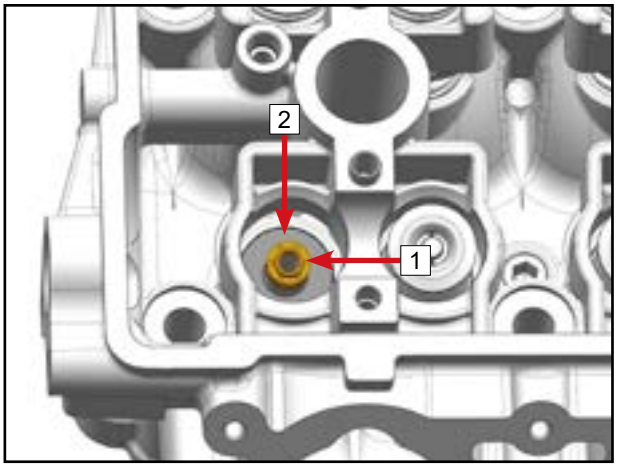

© CFMOTO Powersports, Inc. This manual is subject to all applicable copyright laws. Reproduction or duplication in any form, whole or in part, is strictly prohibited.

5.4.10.2 Cylinder Head Inspection

Cylinder Head

Remove carbon deposits from the combustion chamber and sealing surfaces 1.

Inspect the area between the valve seats on the cylinder head for cracks. If damaged, replace the cylinder head.

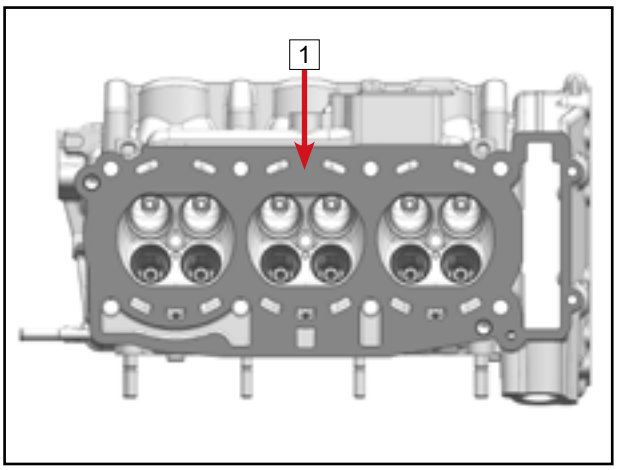

Check camshaft bearing holes A, B, C and D for excessive wear or other damage. If damaged, replace the cylinder head.

NOTE
Cylinder head 1, cam bearing front cover 2, cam bearing cover 3 and 4 must be replaced as a set.

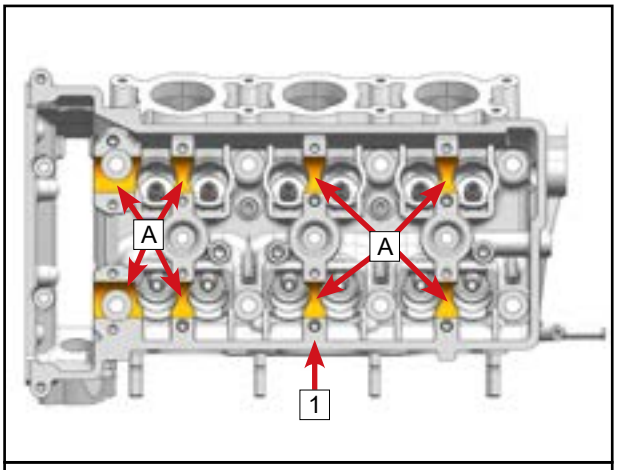

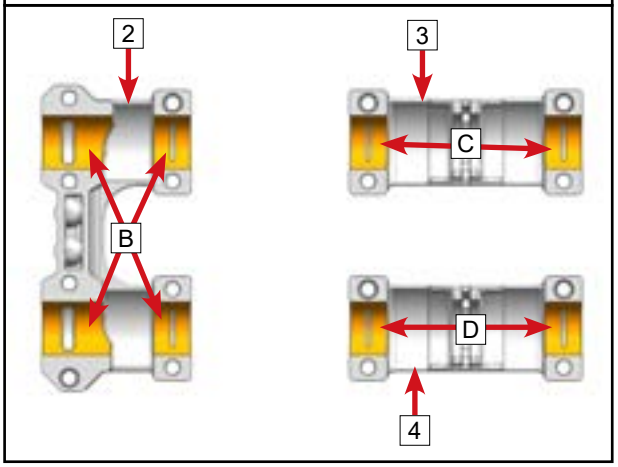

CAM Bearing Cover Distinguishing Mark

IN: Intake CAM bearing cover

EX: Exhaust CAM bearing cover

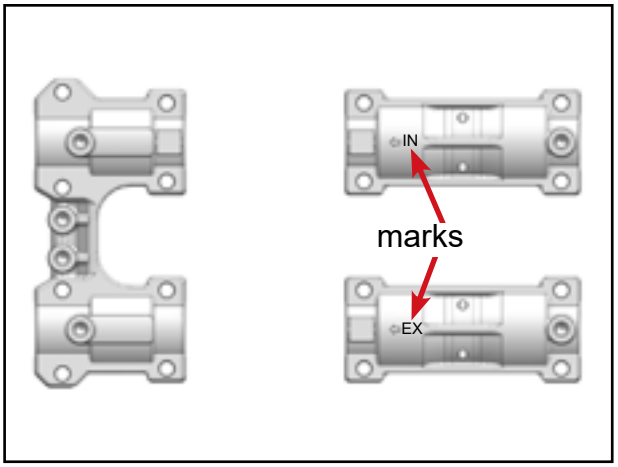

© CFMOTO Powersports, Inc. This manual is subject to all applicable copyright laws. Reproduction or duplication in any form, whole or in part, is strictly prohibited.

Check the sealing surface [1] of the cylinder head for distortion using a straightedge and a feeler gauge. Replace the cylinder head if the measured value is greater than the service limit.

Cylinder Head Sealing Surface Distortion	
Service Limit	0.05 mm (0.00197 in.)

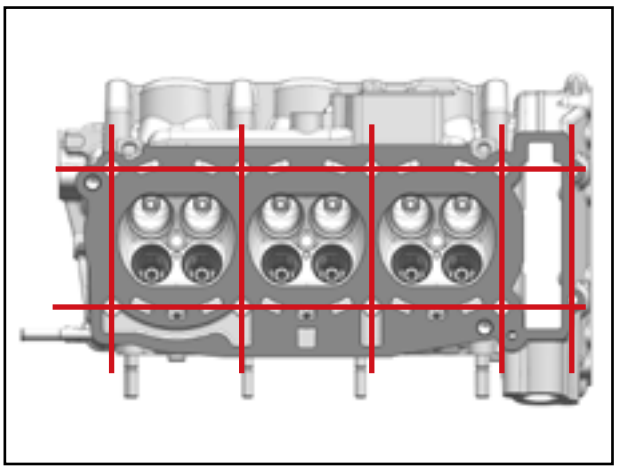

Clean the cylinder head, cam bearing cover and cam bearing front cover thoroughly.
Install the intake cam bearing cover (IN), the exhaust cam bearing cover (EX) and the cam bearing front cover onto the cylinder head.
The arrow mark [A] on the cam bearing cover faces the chain chamber side of the cylinder head.
Install the cam bearing cover bolts and tighten them in three steps in the order of [1]~[16].

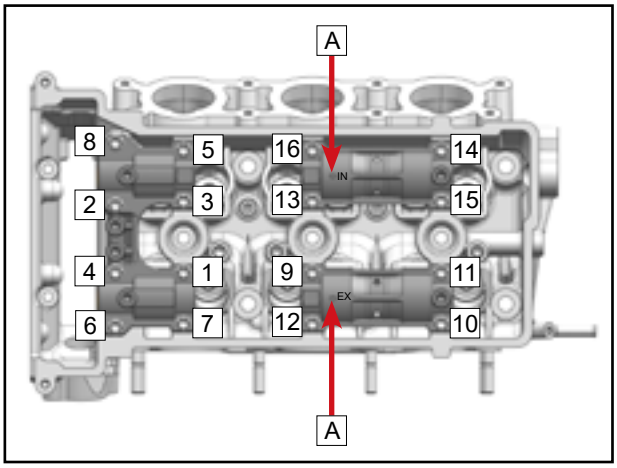

CAM Bearing Cover Bolt Torque	
Step 1	5 N•m (3.7 ft-lb.)
Step 2	8 N•m (5.9 ft-lb.)
Step 3	12 N•m (8.85 ft-lb.)

Measure the diameters of the camshaft bearing hole [1]. If the service limit is exceeded, replace the cylinder head, cam bearing covers and cam bearing front cover at the same time.

Camshaft Bearing Hole [1] DIA	
New	24 ~ 24.021 mm (0.94488 ~ 0.94571 in.)
Service Limit	24.05 mm (0.94685 in.)

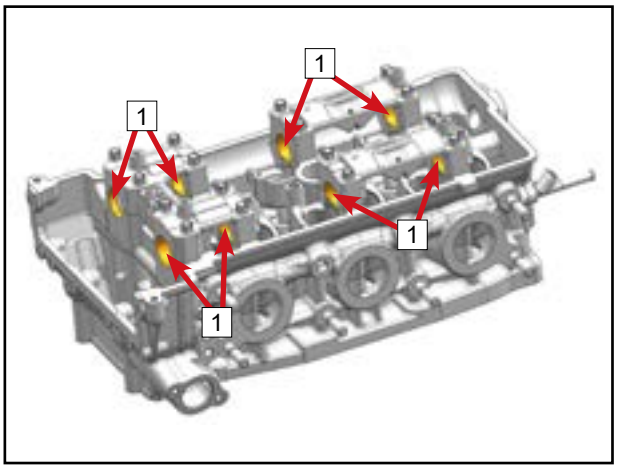

© CFMOTO Powersports, Inc. This manual is subject to all applicable copyright laws. Reproduction or duplication in any form, whole or in part, is strictly prohibited.

Check valve guides for excessive wear or other damage. If found, replace the cylinder head.
Measure the valve guide bore 1 with a small bore gauge, if it exceeds the service limit, replace the cylinder head.

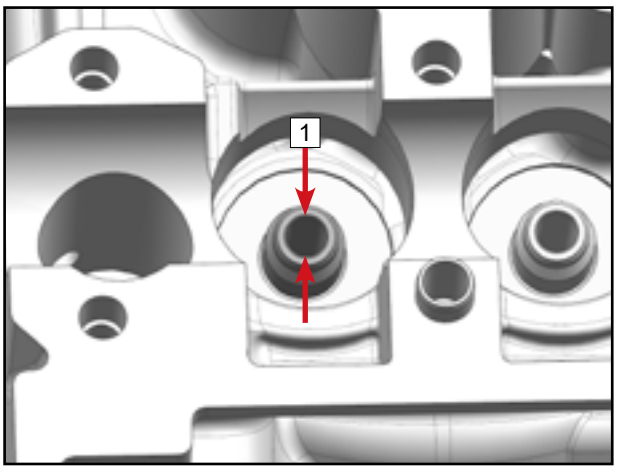

NOTE
Clean valve guide before measurement to remove carbon deposits.

Valve Guide Bore (IN and EX)	
New	5.5 ~ 5.512 mm (0.21654 ~ 0.21701 in.)
Service Limit	5.54 mm (0.21811 in.)

Valve

Check valve stems for abnormal wear and bending. If damaged, replace the valves.
Measure valve stem diameter 1 with micrometer, if it exceeds the service limit, replace the valve.

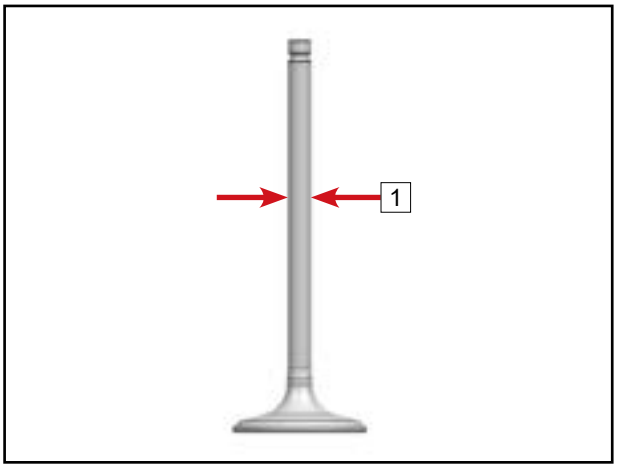

Valve Stem Diameter (IN)	
New	5.465 ~ 5.480 mm (0.21516 ~ 0.21575 in.)
Service Limit	5.445 mm (0.21437 in.)

Valve Stem Diameter (EX)	
New	5.453 ~ 5.467 mm (0.21469 ~ 0.21524 in.)
Service Limit	5.433 mm (0.21390 in.)

Valve Stem to Valve Guide Clearance

Check the clearance between the valve stem and the valve guide. If it exceeds service limit, replace the valve or cylinder head.

Valve Stem to Valve Guide Clearance	
IN	
New	0.02 ~ 0.047 mm (0.00079 ~ 0.00185 in.)
Service Limit	0.08 mm (0.00315 in.)
EX	
New	0.033 ~ 0.059 mm (0.00130 ~ 0.00232 in.)
Service Limit	0.1 mm (0.00394 in.)

© CFMOTO Powersports, Inc. This manual is subject to all applicable copyright laws. Reproduction or duplication in any form, whole or in part, is strictly prohibited.

Valve Taper and Seat

NOTE
Clean valve tapers and seats of carbon deposits before testing.

Check valve taper and seat for abrasion or dents, if there are signs of damage replace valve or cylinder head.
Lap the valves. Apply abrasive to the valve taper and grind the valve with a lapping tool.

NOTE
Verify that the valves are well seated. Apply a marker to check valve contact.

NOTE
The contact area should be in the middle of the valve seat.

Repeat grinding until the valve seals well against the valve seat.
Thoroughly clean the valve taper and seat, then check the contact width.

NOTE
Residual abrasive must be cleaned prior to measurement.

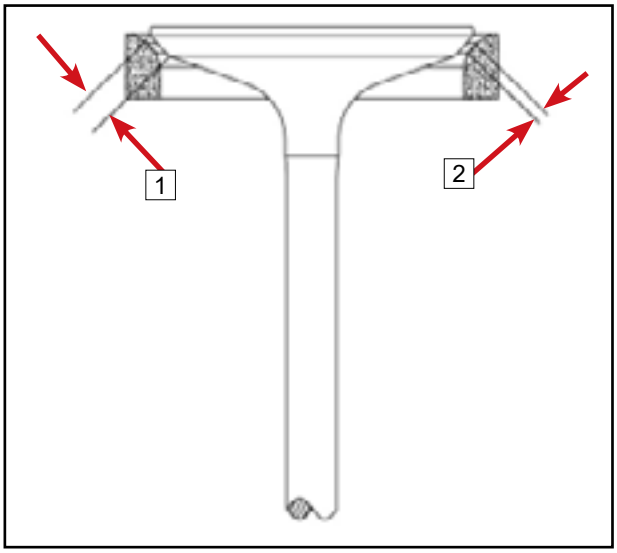

1: Valve Taper Width

Measure valve seat contact width 2 with calipers.

Valve Seat Contact Width	
EX	
New	1 ~ 1.2 mm (0.03937 ~ 0.04724 in.)
Service Limit	1.5 mm (0.0591 in)
IN	
New	0.9 ~ 1.1 mm (0.03543 ~ 0.04331 in.)
Service Limit	1.4 mm (0.05512 in.)

If the valve seat contact width is too wide or has black spots, replace the cylinder head.

© CFMOTO Powersports, Inc. This manual is subject to all applicable copyright laws. Reproduction or duplication in any form, whole or in part, is strictly prohbited.

Valve Spring

Check valve springs for visible damage. If damaged, replace.

Measure the free length 1 of the valve spring. If the measured value is less than the service limit, replace the valve spring.

Free Length of Valve Spring 1	
New	46.9 mm (1.84646 in.)
Service Limit	45 mm (1.77165 in.)

Measure the spring force when the valve spring is compressed to the specified length. If the force is not within the specified range, replace the spring.

Valve Spring Force	
Compressed to 34 mm	225 ~ 249 N
Compressed to 24.6 mm	443 ~ 485 N

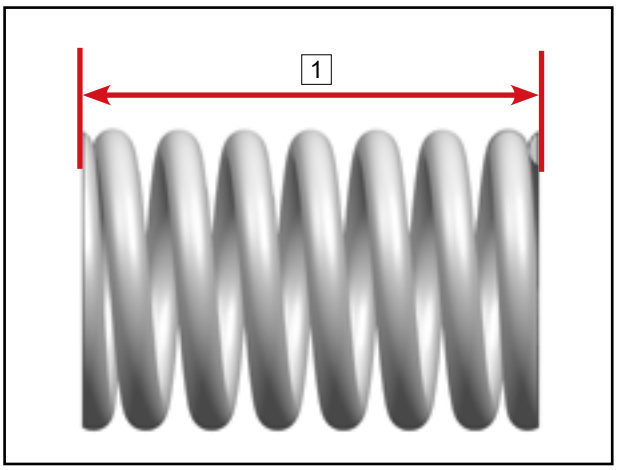

5.4.10.3 Cylinder Head Reassembly

Cylinder head, cam bearing cover and cam bearing front cover must be used together, the matching marks on them should be the same. If any require replacement, they should be replaced as a set.

A: Matching mark engraving position

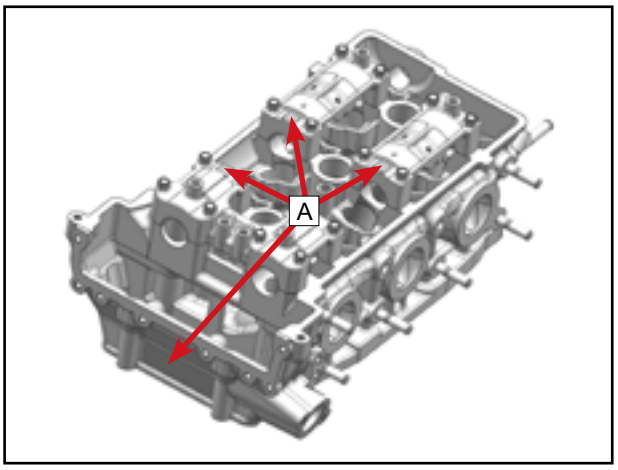

Clean all parts thoroughly before assembly.

Install valve spring lower seat 1.

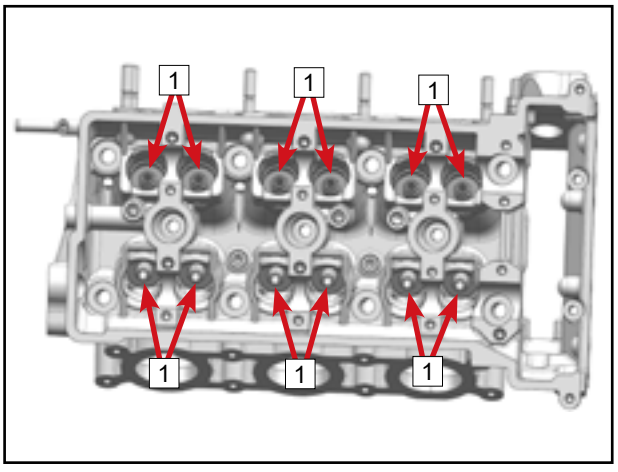

© CFMOTO Powersports, Inc. This manual is subject to all applicable copyright laws. Reproduction or duplication in any form, whole or in part, is strictly prohibited.

Apply a proper amount of oil to the valve guides.
Install new valve oil seals [1] onto the valve guides.

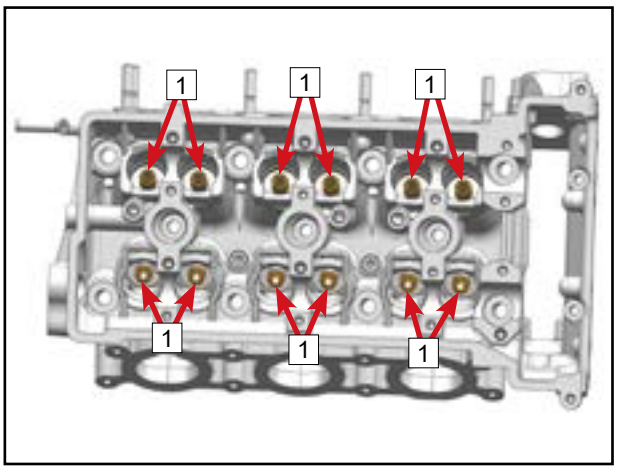

Apply oil to the valve stems and install the valves [1] (intake valve shown).

NOTE
Be careful when sliding the valve stem over the sealing lip of the seal.

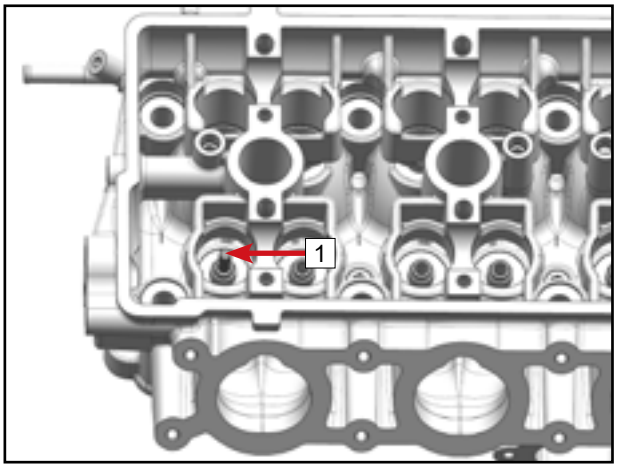

Install valve springs [1].

NOTE
The painted end of the valve spring faces up.

Install valve spring upper seats [2].

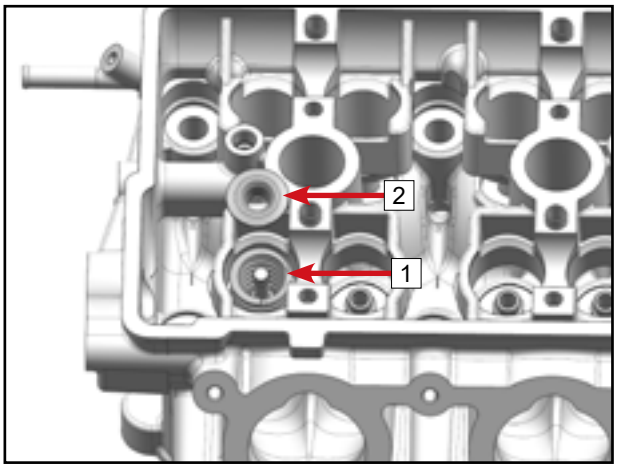

Install the valve spring compression fixture [3].
Place the valve spring compression fixture against the valve face [1] at the bottom and against the valve spring upper seat [2] at the top.
Slowly rotate the lever at the top of the valve spring compression fixture to compress the valve spring until the locking clip groove on the valve is fully exposed.

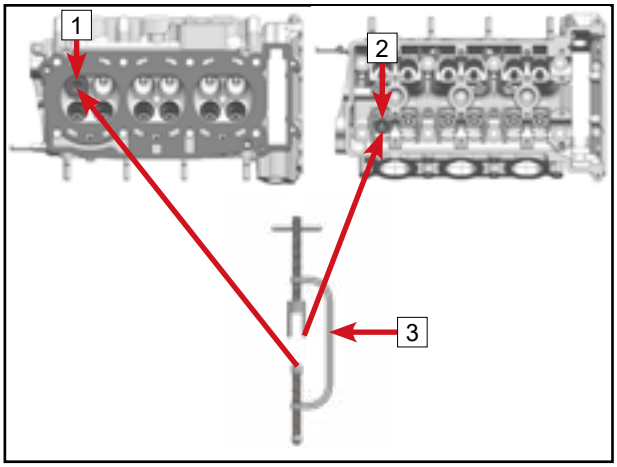

© CFMOTO Powersports, Inc. This manual is subject to all applicable copyright laws. Reproduction or duplication in any form, whole or in part, is strictly prohibited.

Install the valve locking clips [1] and slowly release the valve spring compression tool.

NOTE
To make assembly of the locking clips easier and to keep them in the valve stem locking clip ring groove when the spring is released, lubricate the clips with grease. The valve locking clips must be properly seated in the ring groove on the valve stem.

After installing the valve locking clips, tap the end of each valve stem a few times with a soft hammer and allow the valve to open and close a few times to verify that the valve spring is properly locked.

⚠WARNING
Valve springs that are not properly locked can damage the engine.

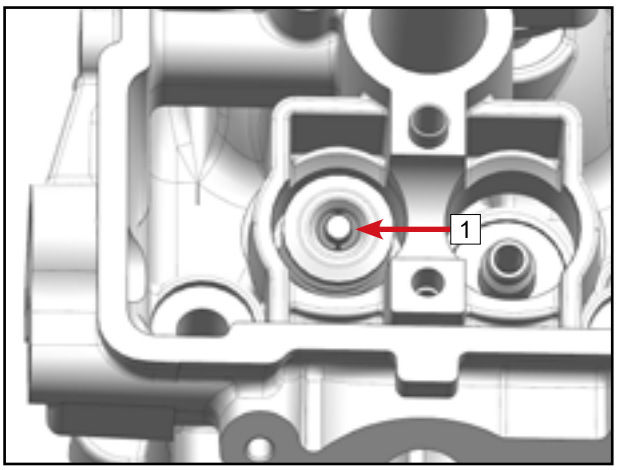

Check cylinder head sealing.

Cylinder Head Sealing Inspection

— Liquid inspection

Clean the bottom of the cylinder head and the valve disc with dust-free paper.

Inject proper amount of cleaning solvent into the intake and exhaust channels.

After five minutes, check whether solvent is flowing from the valve seat ring [1].

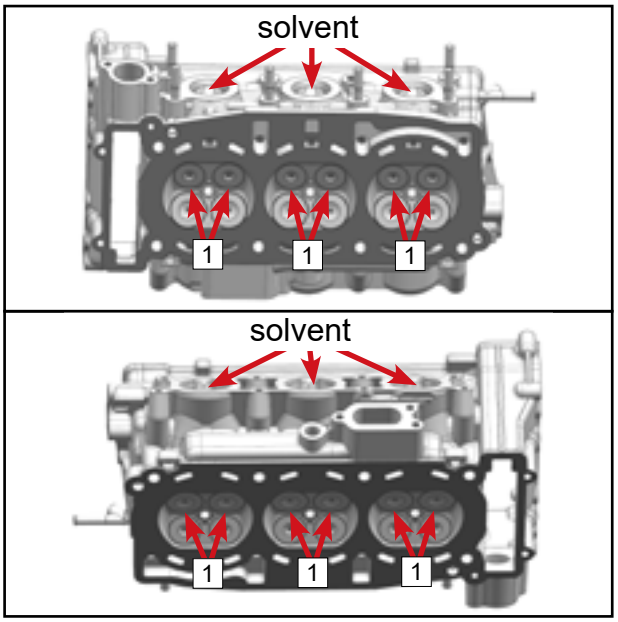

— Light inspection

When there is no suitable cleaning solvent, use light inspection.

Align the bottom of the cylinder head with the light source.

Observe the valve seat ring from the intake and exhaust duct for light leakage [1].

If the seal of the cylinder head does not pass the oil test or light test, remove the valve and check the surface of the corresponding valve and valve seat ring. If there is no problem, clean the valve and valve seat ring again after assembly. If the cylinder head still does not pass the oil test or light test, replace with a new part.

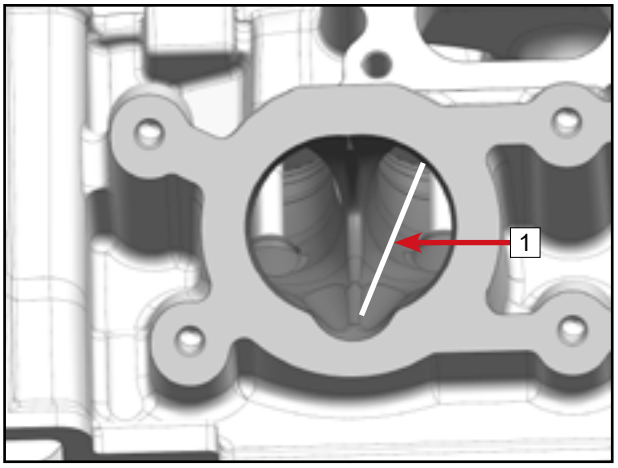

© CFMOTO Powersports, Inc. This manual is subject to all applicable copyright laws. Reproduction or duplication in any form, whole or in part, is strictly prohbited.

Apply a mixture of oil and MoS_2 grease (weight ratio 10:1) on the outer surface of the valve tappets 1.
Install the corresponding tappet 1 in each corresponding tappet hole.

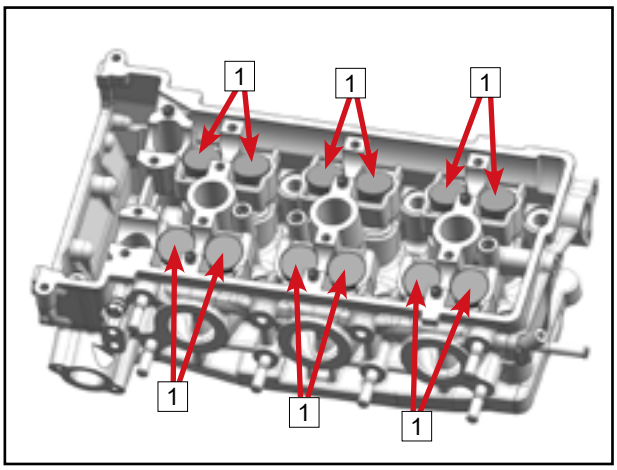

Install coolant temperature sensor 1, tighten to specified torque.

Coolant Temp. Sensor 1	
Torque	22 N•m (16.2 ft-lb.)

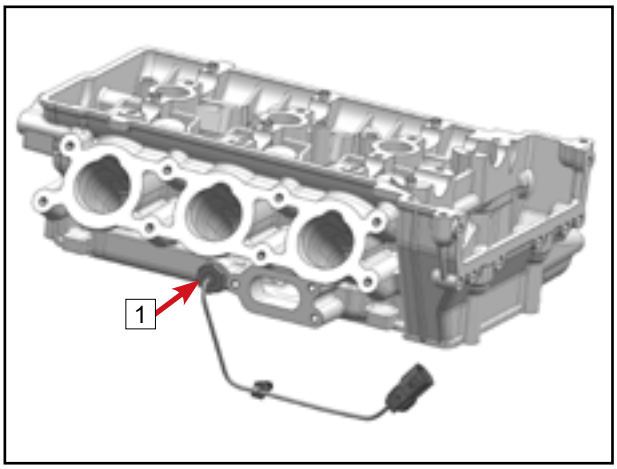

Pre-checking and Adjusting Valve Clearance

Check and verify that the removed camshaft can still be used. If necessary, replace the camshaft with a new one.
Install the intake camshaft assembly 1 and exhaust camshaft assembly 2.

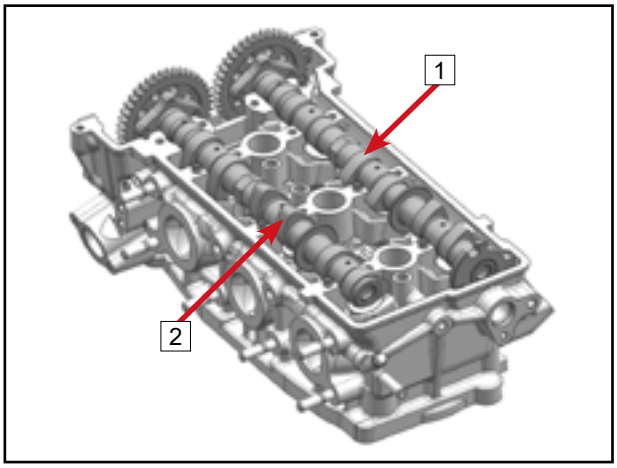

© CFMOTO Powersports, Inc. This manual is subject to all applicable copyright laws. Reproduction or duplication in any form, whole or in part, is strictly prohibited.

Install the intake-side camshaft bearing cover (IN), the exhaust-side camshaft bearing cover (EX) and the camshaft bearing front cover to the cylinder head.
The arrow mark [A] on the camshaft bearing cover faces the chain chamber side of the cylinder head.
Install the cam bearing cover bolts and tighten them in three steps in the order of [1]~[16].

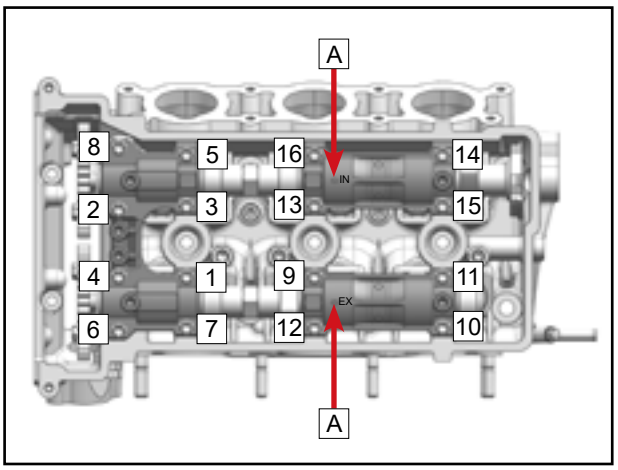

Cam Bearing Cover Bolt Torque	
Step 1	5 N•m (3.7 ft-lb.)
Step 2	8 N•m (5.9 ft-lb.)
Step 3	12 N•m (8.85 ft-lb.)

Rotate the camshaft so the tip of each cam lobe is facing upwards, then measure the clearance between the cam lobe base surface and the tappet with a feeler gauge. If it does not meet the requirements, replace the tappet with one of appropriate thickness and re-measure until it meets the requirement.

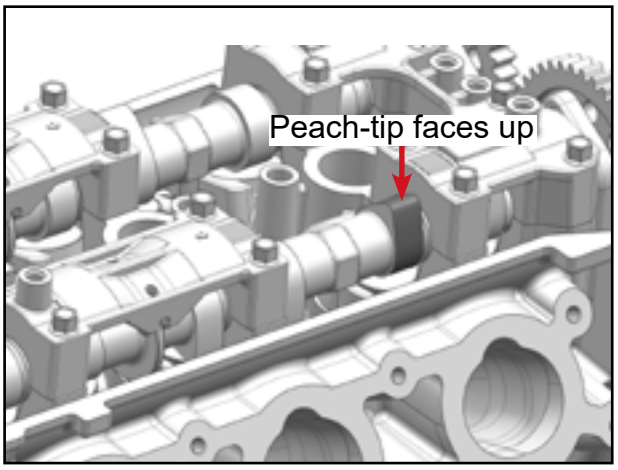

Valve Clearance (Cold Engine)	
IN	0.12 ~ 0.18 mm (0.004~ 0.007 in.)
EX	0.32 ~ 0.38 mm (0.012 ~ 0.015 in.)

© CFMOTO Powersports, Inc. This manual is subject to all applicable copyright laws. Reproduction or duplication in any form, whole or in part, is strictly prohbited.

Valve tappets are grouped by thickness (T) as follows:

Valve Tappet T Size Grouping			
Mark	T(mm)	Mark	T(mm)
320	3.20	376	3.76
322	3.22	378	3.78
324	3.24	380	3.80
326	3.26	382	3.82
328	3.28	384	3.84
330	3.30	386	3.86
332	3.32	388	3.88
334	3.34	390	3.90
336	3.36	392	3.92
338	3.38	394	3.94
340	3.40	396	3.96
342	3.42	398	3.98
344	3.44	400	4.00
346	3.46	402	4.02
348	3.48	404	4.04
350	3.50	406	4.06
352	3.52	408	4.08
354	3.54	410	4.10
356	3.56	412	4.12
358	3.58	414	4.14
360	3.60	416	4.16
362	3.62	418	4.18
364	3.64	420	4.20
366	3.66	422	4.22
368	3.68	424	4.24
370	3.70	426	4.26
372	3.72	428	4.28
374	3.74		

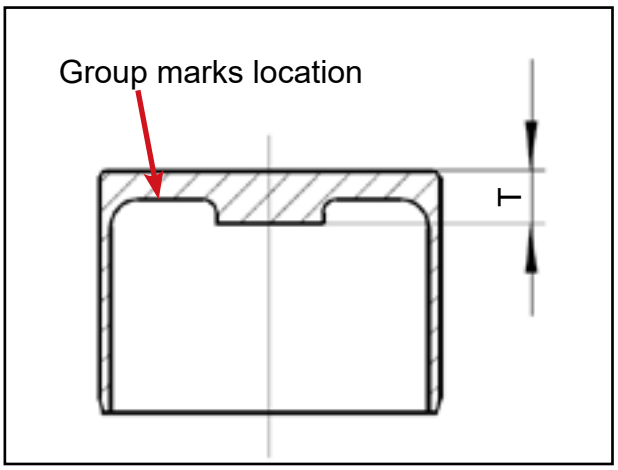

© CFMOTO Powersports, Inc. This manual is subject to all applicable copyright laws. Reproduction or duplication in any form, whole or in part, is strictly prohbited.

5.4.11 Cylinder Body Inspection/ Measurement

Inspect the cylinder body for cracks or other damage.

Check cylinder bores for cracks, strains, and wear steps at the top and bottom.

Replace the cylinder body if necessary.

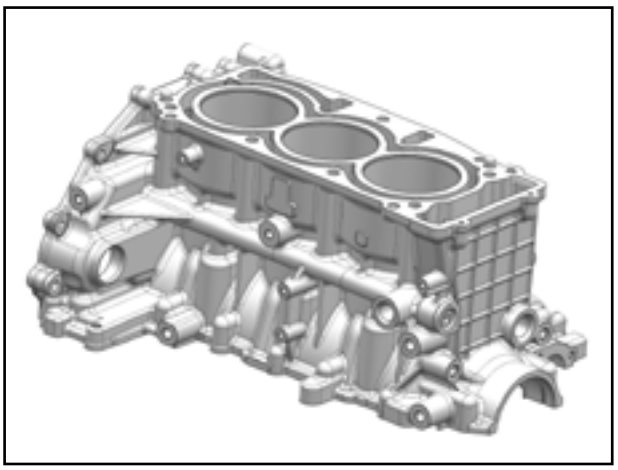

NOTE
Replace cylinder body and lower crankcase as a set.

Measure the cylinder bores at various locations along the X and Y axes.

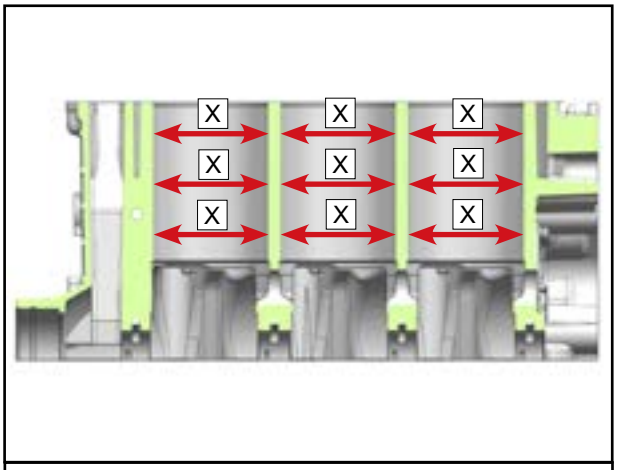

If the cylinder bore exceeds the service limit at any location, replace the cylinder body.

Cylinder Bore	
New	80 ~ 80.015 mm (3.149 ~ 3.150 in.)
Service Limit	80.05 mm (3.151 in.)

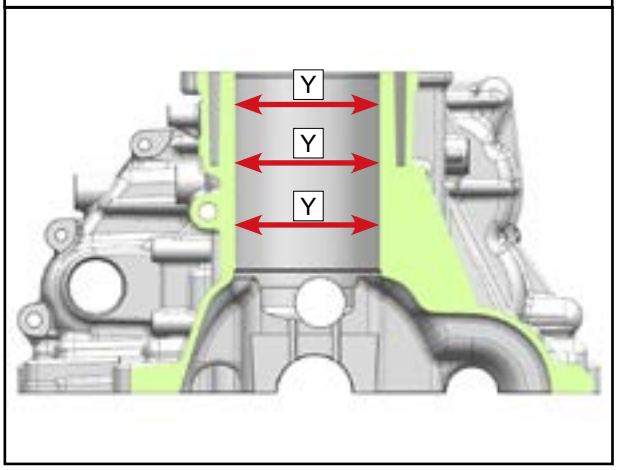

NOTE
When replacing the cylinder body, it is necessary to replace the piston rings with new ones.

Check the sealing surface of the cylinder for distortion using a straightedge and a feeler gauge. If the measured value is greater than the service limit, replace the cylinder body.

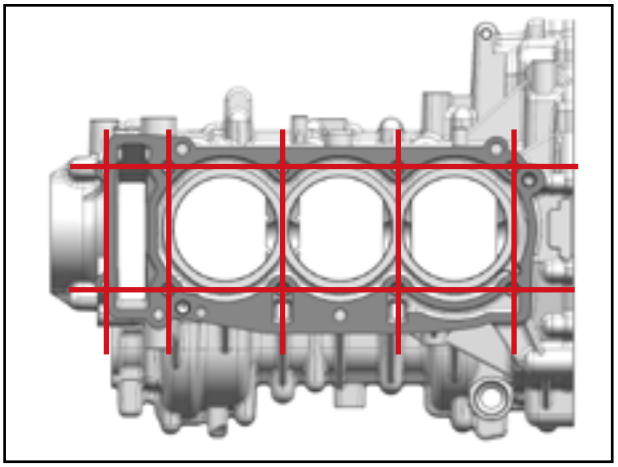

Cylinder Sealing Surface Distortion	
Service Limit	0.05 mm (0.00197 in.)

© CFMOTO Powersports, Inc. This manual is subject to all applicable copyright laws. Reproduction or duplication in any form, whole or in part, is strictly prohibited.

5.4.12 Piston Inspection/Measurement

Piston Inspection

Inspect the piston for scratches, cracks or other damage. If damaged, replace the piston. If necessary, replace the piston along with the cylinder body.

Measure the diameter 1 of the piston skirt at a distance B perpendicular to the piston pin hole, as shown in the image. If the measured value is less than the service limit, replace the piston.

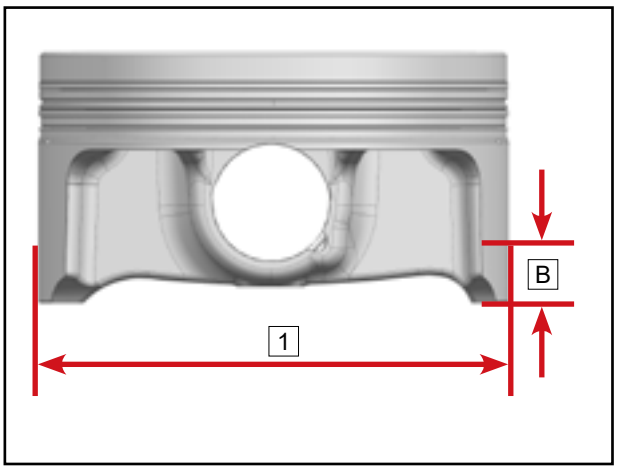

Distance B	8 mm (0.314 in.)

Piston Skirt Diameter 1	
New	79.955 ~ 79.965 mm (3.147 ~ 3.148 in.)
Service Limit	79.925 mm (3.146 in.)

Piston / Cylinder Clearance

Piston / Cylinder Clearance: the difference between the cylinder bore and the piston skirt diameter.

Calculate the piston/cylinder clearance based on the above measurements. If the clearance is greater than the service limit, replace the piston and repeat the measurement procedure.

Piston / Cylinder Clearance	
Standard	0.035 ~ 0.06 mm (0.001 ~ 0.002 in.)
Service Limit	0.08 mm (0.003 in.)

© CFMOTO Powersports, Inc. This manual is subject to all applicable copyright laws. Reproduction or duplication in any form, whole or in part, is strictly prohbited.

Piston Ring / Ring Groove Clearance

Check that the piston ring moves freely in the piston ring groove. If there is any sticking, clean the piston ring grooves.

NOTE
Old piston rings can be used to clean the piston ring grooves.

Check piston rings for damage. If they are damaged, replace them with new ones.

NOTE
Install the piston ring with the marked side facing up.

Measure the clearance between the piston ring and the piston ring groove using a feeler gauge [1]. If the clearance is greater than the service limit, replace the piston and piston rings.

Piston Ring / Ring Groove Clearance	
First Ring	
New	0.03 ~ 0.07 mm (0.001 ~ 0.002 in.)
Service Limit	0.15 mm (0.005 in.)
Second Ring	
New	0.02 ~ 0.06 mm (0.00079 ~ 0.002 in.)
Service Limit	0.15 mm (0.005 in.)
Oil Control Ring	
New	0.04 ~ 0.12 mm (0.001 ~ 0.004 in.)
Service Limit	0.15 mm (0.005 in.)

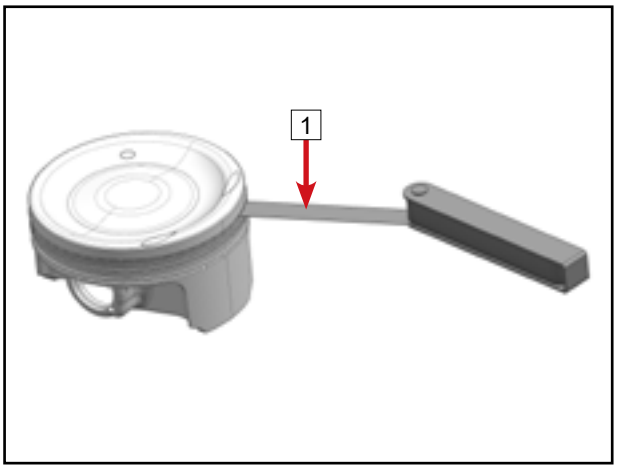

© CFMOTO Powersports, Inc. This manual is subject to all applicable copyright laws. Reproduction or duplication in any form, whole or in part, is strictly prohibited.

Piston Ring Gap Clearance

Remove the piston ring from the piston.
Place the piston ring in the cylinder in the area of 8 ~ 16 mm (5/16 ~ 5/8 in.) from the top of the cylinder.

NOTE
To correctly position the ring in the cylinder, use the piston as a pusher.

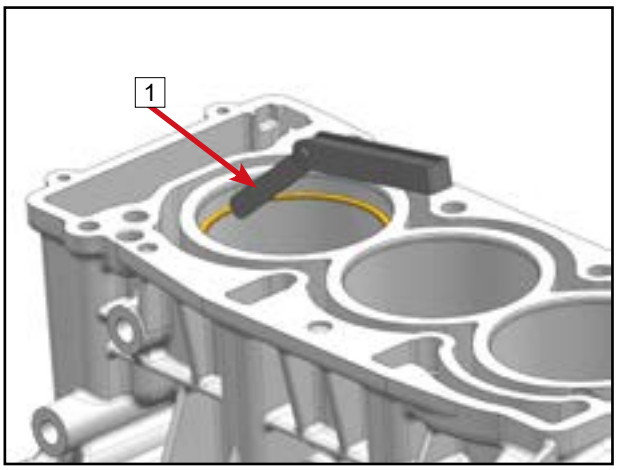

Measure the piston ring gap clearance with a feeler gauge 1. If clearance is excessive, replace the piston ring.

Piston Ring Gap Clearance	
First Ring	
New	0.15 ~ 0.28 mm (0.005 ~ 0.011 in.)
Service Limit	0.55 mm (0.021 in.)
Second Ring	
New	0.28 ~ 0.41 mm (0.011 ~ 0.016 in.)
Service Limit	0.55 mm (0.021 in.)
Oil Control Ring	
New	0.2 ~ 0.7 mm (0.007 ~ 0.027 in.)
Service Limit	1.2 mm (0.047 in.)

Piston Pin Hole Diameter

Measure the diameter 1 of the piston pin hole. If the measured value is greater than the service limit, replace the piston.

Piston Pin Hole Diameter 1	
New	20.004 ~ 20.010 mm (0.7875 ~ 0.7877 in.)
Service Limit	20.04 mm (0.78 in.)

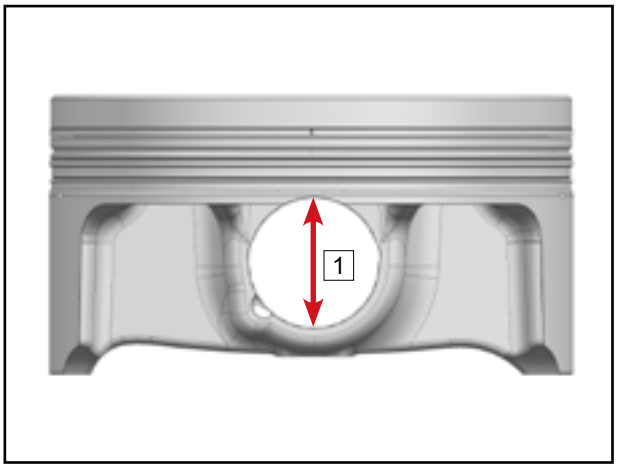

Piston Pin Diameter

Using synthetic woven abrasive, clean piston pin from deposits.
Inspect the piston pin for scratches, cracks or other damage. If damaged, replace.
Use a micrometer to measure the diameter 1 of the piston pin in several places. If measurement is less than service limit, replace piston pin.

Piston Pin Diameter 1	
New	19.996 ~ 20.0 mm (0.7872 ~ 0.7874 in.)
Service Limit	19.980 mm (0.786 in.)

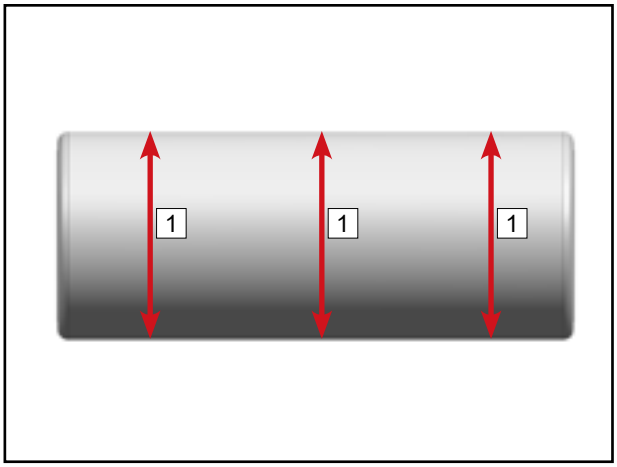

© CFMOTO Powersports, Inc. This manual is subject to all applicable copyright laws. Reproduction or duplication in any form, whole or in part, is strictly prohibited.

Piston Assembly

Use needle-nose pliers to insert a piston pin retainer 1 on one side.

NOTE
Removed piston pin retainers cannot be reused and must be replaced with a new ones.

Misalign the piston pin retainer opening A away from the piston groove notch B as shown.

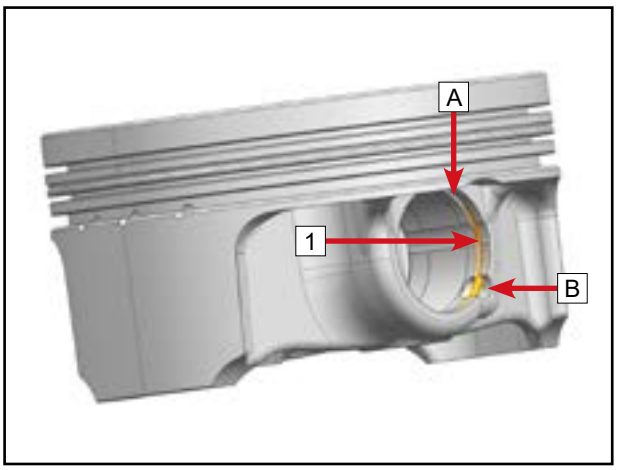

Install the oil control ring 3, the second ring 2, and the first ring 1 into the corresponding piston ring grooves in sequence.

NOTE
Markings on the piston rings face up.

Verify that the piston rings rotate smoothly after installation.

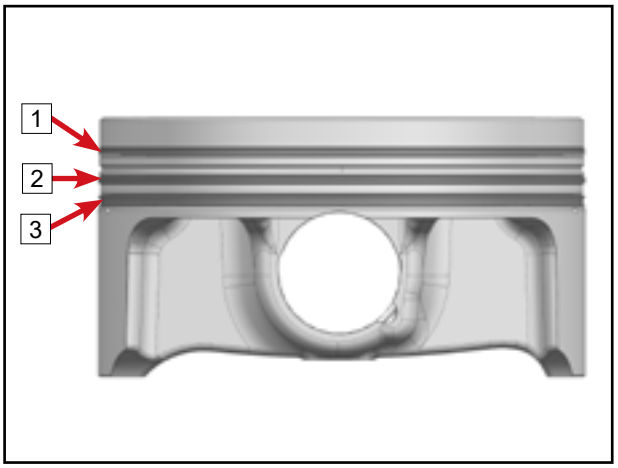

Adjust the piston ring gaps to the correct positions shown on the right.

A: Gap position of oil control ring liner ring
B: Gap position of oil control ring scraper ring (upper)
C: First ring gap position
D: Second ring gap position
E: Gap position of oil control ring scraper ring (lower)

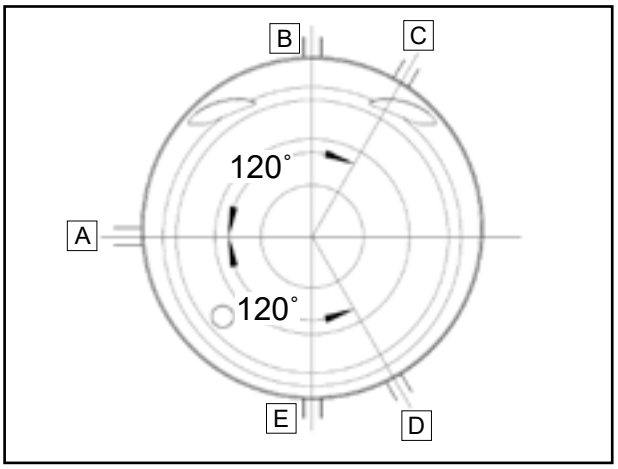

© CFMOTO Powersports, Inc. This manual is subject to all applicable copyright laws. Reproduction or duplication in any form, whole or in part, is strictly prohibited.

5.4.13 Timing Assembly Inspection

Thoroughly clean all parts.

Inspect the timing drive sprocket 1 for excessive wear or damage. If damaged, replace the crankshaft assembly.

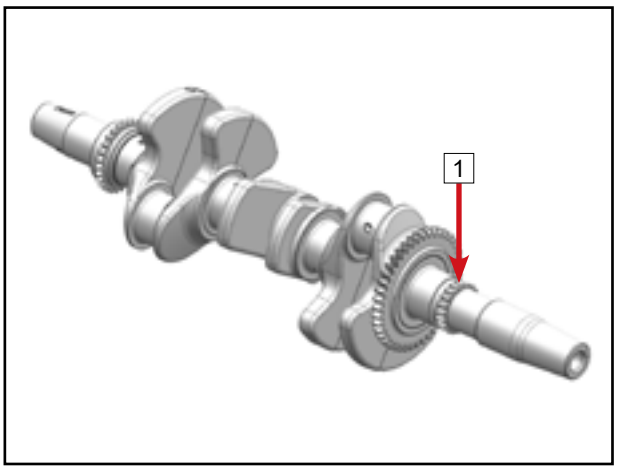

Inspect the tensioner O-ring seals 1 and 2 for cracks, hardening or other damage. Replace seals if necessary.
Check plunger 3 for excessive wear or other damage. If damaged, replace the tensioner.
Inspect the housing 4 for damage. If damaged, replace the tensioner.
Compress the plunger spring and check for smooth plunger return. If stuck, replace the tensioner.

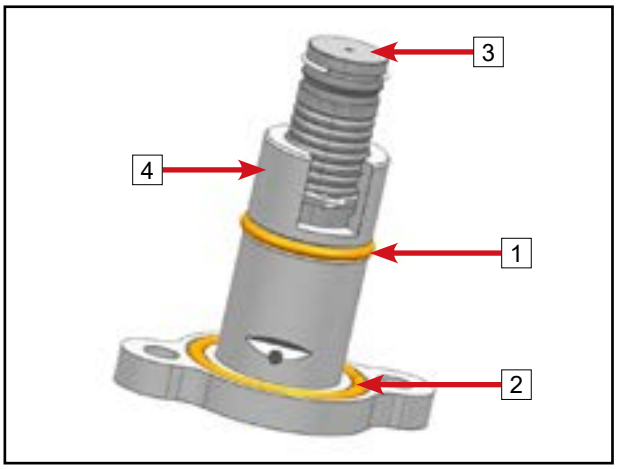

Check the tensioning plate 1 for excessive wear or damage. If damaged, replace it.
Check the chain guide 2 for excessive wear or damage. If damaged, replace it.
Inspect chain upper guide assembly 3 for excessive wear or damage. If damaged, replace it.
Inspect the timing chain 4 for excessive wear or damage, or if the chain links move freely. If damaged or the links are stiff, replace the timing chain and all other timing assembly components, including the crankshaft.

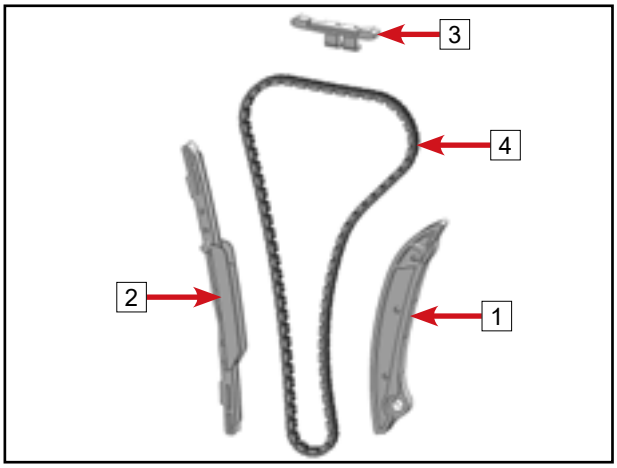

Camshaft Assembly

Check the camshaft timing sprockets 1 for excessive wear or damage. If damaged, replace camshafts and timing chain.
Inspect each camsahft and bearing journals of the intake 2 and exhaust 3 camshafts for nicks, scratches, cracks or other damage. Replace camshafts if necessary.

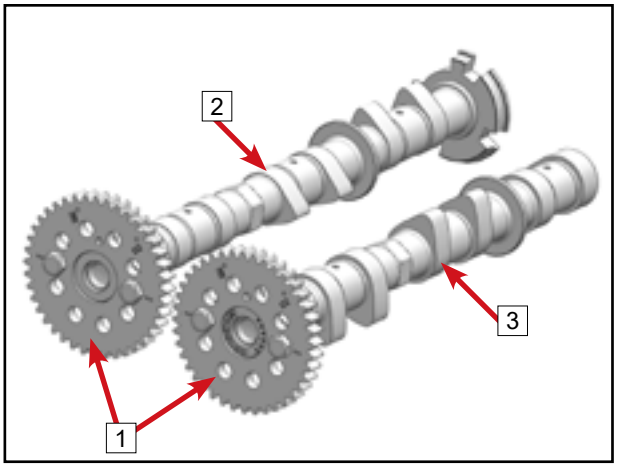

© CFMOTO Powersports, Inc. This manual is subject to all applicable copyright laws. Reproduction or duplication in any form, whole or in part, is strictly prohibited.

Measure camshaft journal diameters 1. If the measured value is less than the service limit, replace the camshaft.

Camshaft Journal Diameter 1 (IN and EX)	
New	23.950 ~ 23.972 mm (0.942 ~ 0.943 in.)
Service Limit	23.920 mm (0.941 in.)

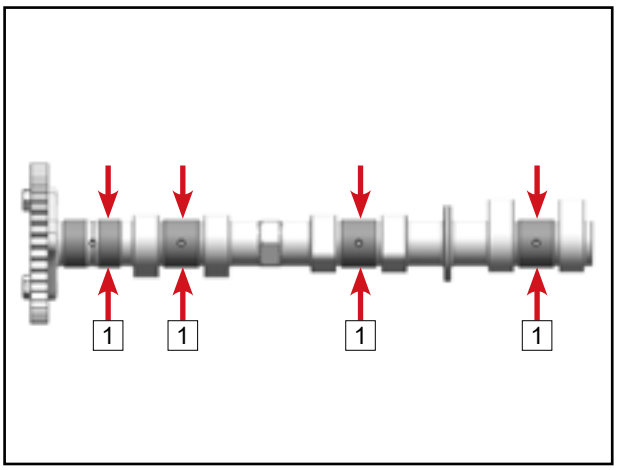

Camshaft Journal/Camshaft Bearing Bore Clearance: Difference between camshaft bearing hole diameter and camshaft journal diameter.
Calculate the clearance between the camshaft journal and the camshaft bearing hole. If the clearance exceeds the service limit, replace the camshaft or cylinder head.
For camshaft bearing hole diameter measurements, refer to the Cylinder Head Inspection section.

Camshaft Journal/Camshaft Bearing Hole Clearance	
New	0.028 ~ 0.071 mm (0.001 ~ 0.002 in.)
Service Limit	0.13 mm (0.0051 in.)

Measure the cam height 1 of the intake/exhaust camshafts separately.
If the measured value is less than the service limit, replace the camshaft.

Cam Height 1	
Intake Camshaft	
New	32.145 ~ 32.255 mm (1.265 ~ 1.269 in.)
Service Limit	32.045 mm (1.261 in.)
Exhaust Camshaft	
New	36.043 ~ 36.157 mm (1.419 ~ 1.423 in.)
Service Limit	35.943 mm (1.415 in.)

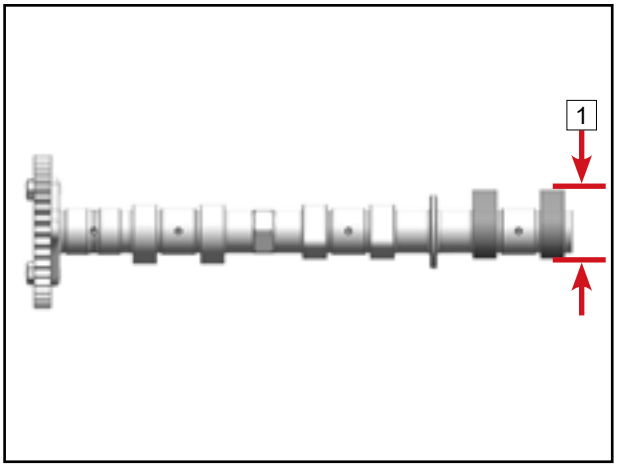

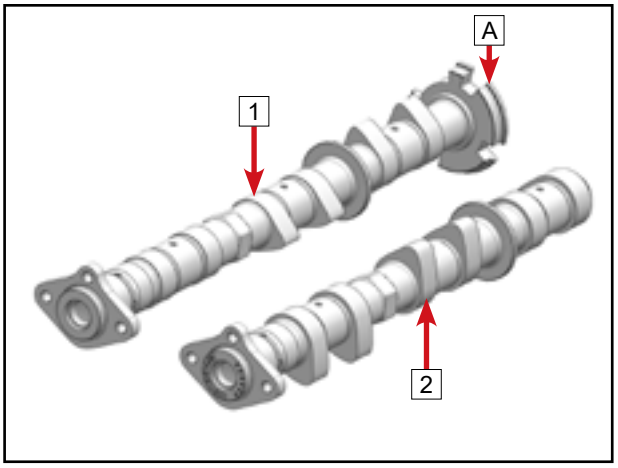

Camshaft Identification
1:Intake Camshaft
The camshaft signal plate A is on the intake camshaft.
2:Exhaust Camshaft

© CFMOTO Powersports, Inc. This manual is subject to all applicable copyright laws. Reproduction or duplication in any form, whole or in part, is strictly prohbited.

Camshaft Disassembly

NOTE
The intake camshaft is disassembled in the same way as the exhaust camshaft.

Exhaust camshaft shown:

Remove bolts 1 .

Remove camshaft timing sprocket 2 .

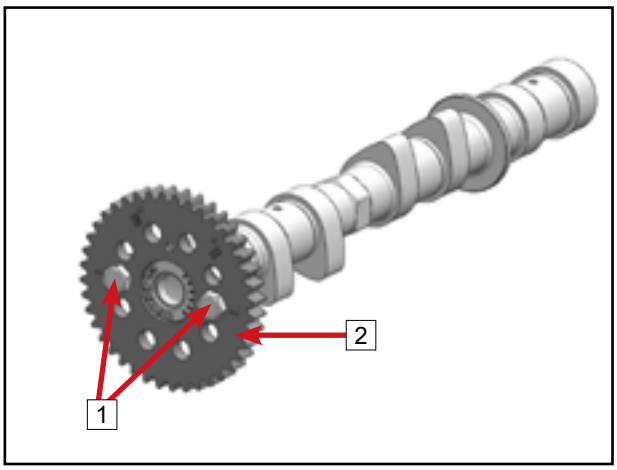

Remove dowel pin 1 (if required).

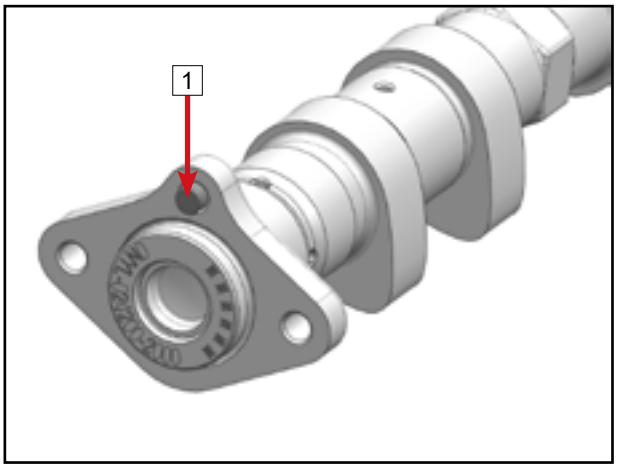

Camshaft Assembly

NOTE
The intake camshaft is assembled in the same way as the exhaust camshaft.

Exhaust camshaft shown:

Install dowel pin 1 onto the camshaft 2.

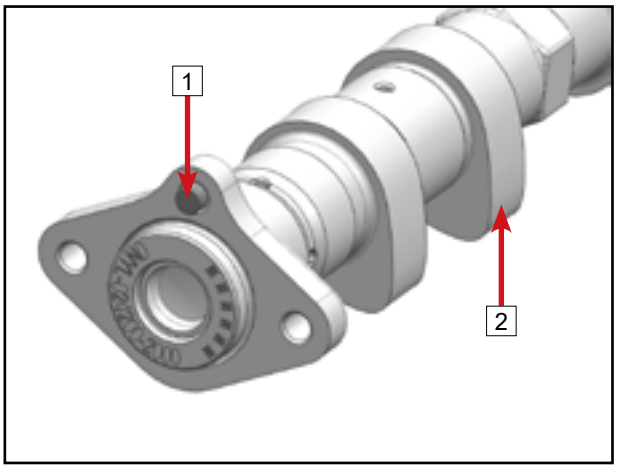

Install the camshaft timing sprocket 2 by aligning the locating hole in the sprocket with the dowel pin on the camshaft.

NOTE
The timing marks (dot marks and line marks) on the camshaft timing sprocket face outward.

Apply 243 thread locker to bolts 1.

Install bolts 1 and tighten to specified torque.

Camshaft Timing Sprocket Bolts 1	
Torque	15 N•m (11.1 ft-lb.)

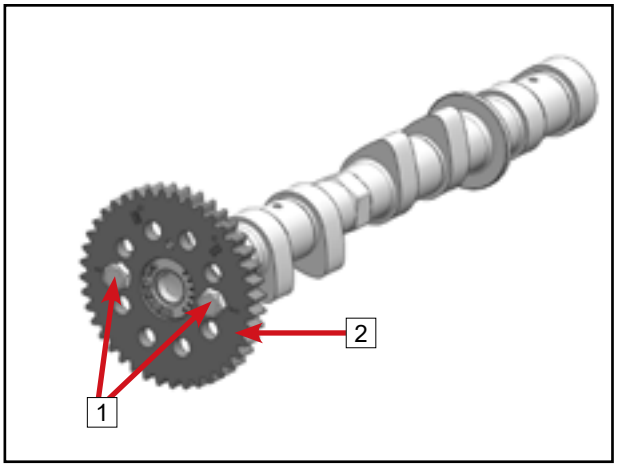

© CFMOTO Powersports, Inc. This manual is subject to all applicable copyright laws. Reproduction or duplication in any form, whole or in part, is strictly prohibited.

5.4.14 Crankshaft and Connecting Rod Inspection

Crankshaft Assembly

Inspect each support journal for scratches, cracks or other damage.

Inspect the balance shaft drive gear [1], oil pump drive gear [2] and timing drive sprocket [3] for excessive wear or other damage.

Check the keyway [A] on the crankshaft for excessive wear or other damage.

If necessary, replace crankshaft assembly.

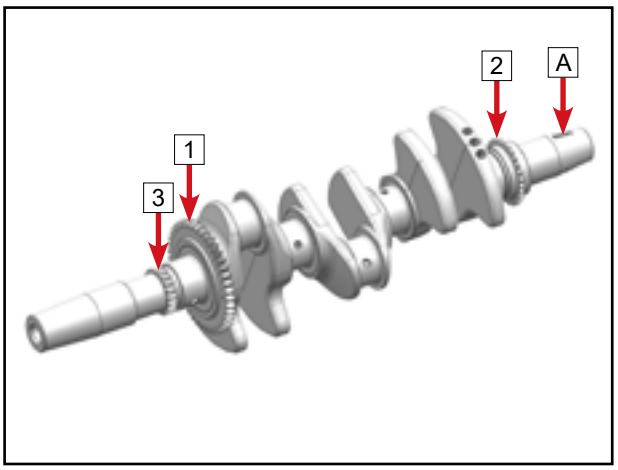

Use compressed air to blow through the oil holes and make sure they are not clogged.

Measure crankshaft main journal diameters [D]. If less than the service limit, replace the crankshaft.

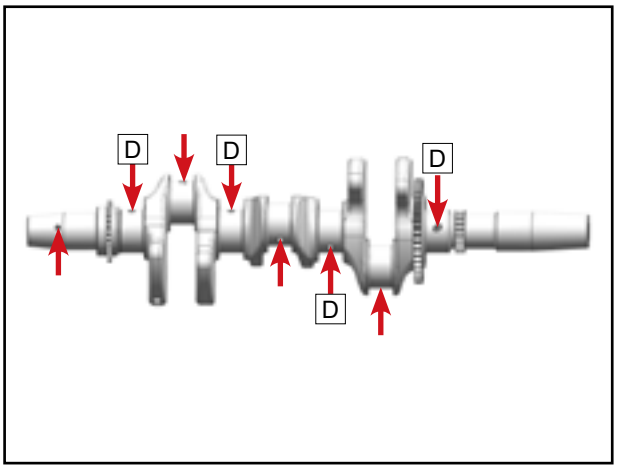

Crankshaft Main Journal Diameter [D]	
New	37.985 ~ 38.000 mm (1.495 ~ 1.496 in.)
Service Limit	37.960 mm (1.494 in.)

© CFMOTO Powersports, Inc. This manual is subject to all applicable copyright laws. Reproduction or duplication in any form, whole or in part, is strictly prohbited.

Connecting rod big end inspection

NOTE
The connecting rod must be assembled according to the pairing mark on the side of the big end of the connecting rod. The connecting rod of each cylinder cannot be exchanged.

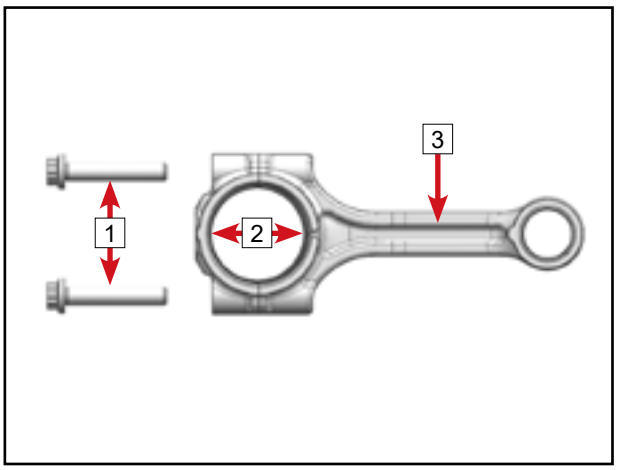

1: connecting rod bolts
2: connecting rod bearing
3: connecting rod

Install the connecting rod bearing 2 as they were in the original state.

Install the connecting rod bolts 1 and tighten them in two steps.

Step 1 Torque	20 ±2 N•m (14.7 ft-lb. ± 1.47 ft-lb.)
Step 2 Angle	150° ±5°

Measure the big end inner diameter A of the connecting rod.

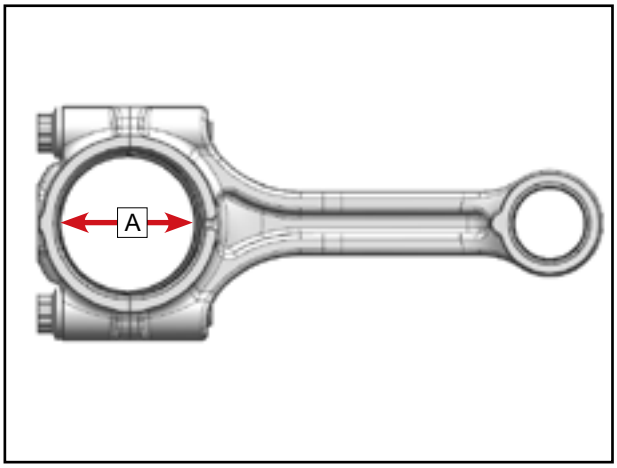

Connecting Rod Big End Bearing Inner Diameter A	
Service Limit	38.06 mm (1.49843 in.)

Measure the diameter B of the connecting rod journals on the crankshaft.

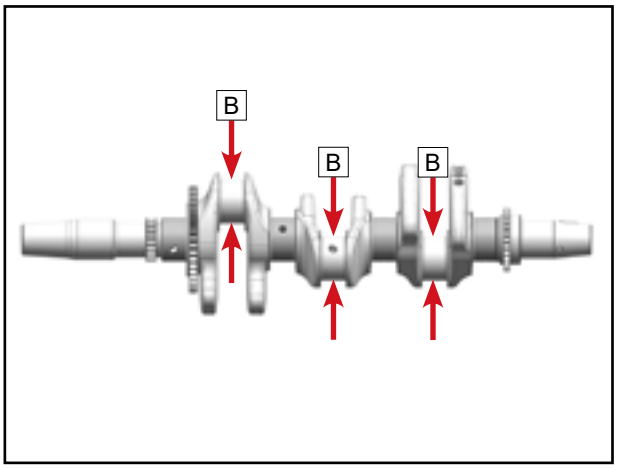

Connecting Rod Journal Diameter B	
New	37.985 ~ 38.000 mm (1.495 ~ 1.496 in.)
Service Limit	37.97 mm (1.494 in.)

Compare the inner diameter A of the big end bearing of connecting rods with the connecting rod journal diameters B, and determine the radial clearance.

Connecting Rod Big End Radial Clearance	
Service Limit	A - B ≤0.08 mm (0.0031 in.)

If the radial clearance of the big end of the connecting rod exceeds the service limit, the connecting rod bearing or the crankshaft, or both, need to be replaced.

© CFMOTO Powersports, Inc. This manual is subject to all applicable copyright laws. Reproduction or duplication in any form, whole or in part, is strictly prohbited.

Connecting Rod Big End Axial Clearance

NOTE
Measure the big end axial clearance before the connecting rod is removed from the crankshaft.

Measure the clearance between the connecting rod big end face and the crank arm end face of the crankshaft using a feeler gauge 1.

Measure the big end axial clearance of the other two connecting rods in the same way.

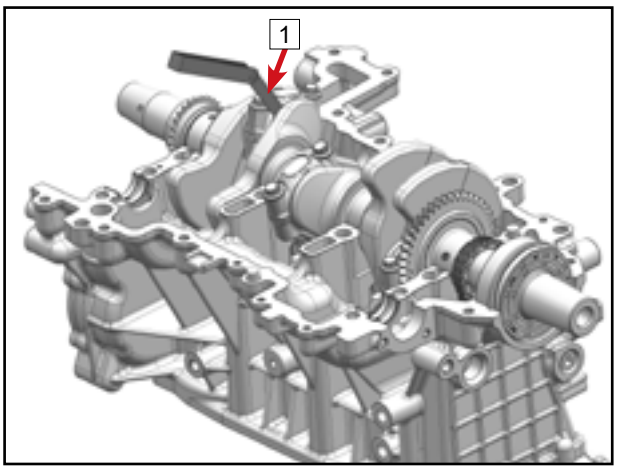

Connecting Rod Big End Axial Clearance	
New	0.13 ~ 0.32 mm (0.005 ~ 0.012 in.)
Service Limit	0.45 mm (0.017 in.)

If the clearance is greater than the service limit, replace the connecting rod with a new one and re-measure the clearance. If after replacing the connecting rods, the clearance still exceeds the service limit, the crankshaft must be replaced.

Connecting Rod Small Head Bore I.D.

Measure connecting rod small head bore inner diameter 1.

Connecting Rod Small Head Bore I.D. 1	
New	20.005 ~ 20.015 mm (0.787 ~ 0.788 in.)
Service Limit	20.045 mm (0.789 in.)

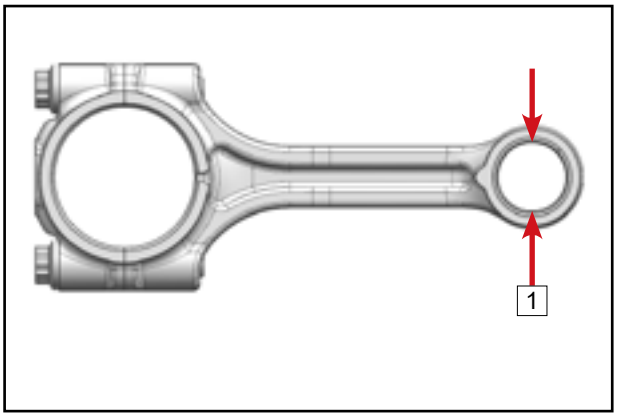

© CFMOTO Powersports, Inc. This manual is subject to all applicable copyright laws. Reproduction or duplication in any form, whole or in part, is strictly prohbited.

Connecting Rod Grouping

The following table shows the grouping of the diameter 1 of the connecting rod big end hole and the weight of the connecting rod, and the grouping marking position is shown in the right image.

2: Connecting rod big end bore diameter group marking position

3: Connecting rod weight marking position

4: Position of pair marking

The pairing marks for the connecting rod cover and connecting rod body are the same.

5: Mounting direction marking (protrusion on the connecting rod)

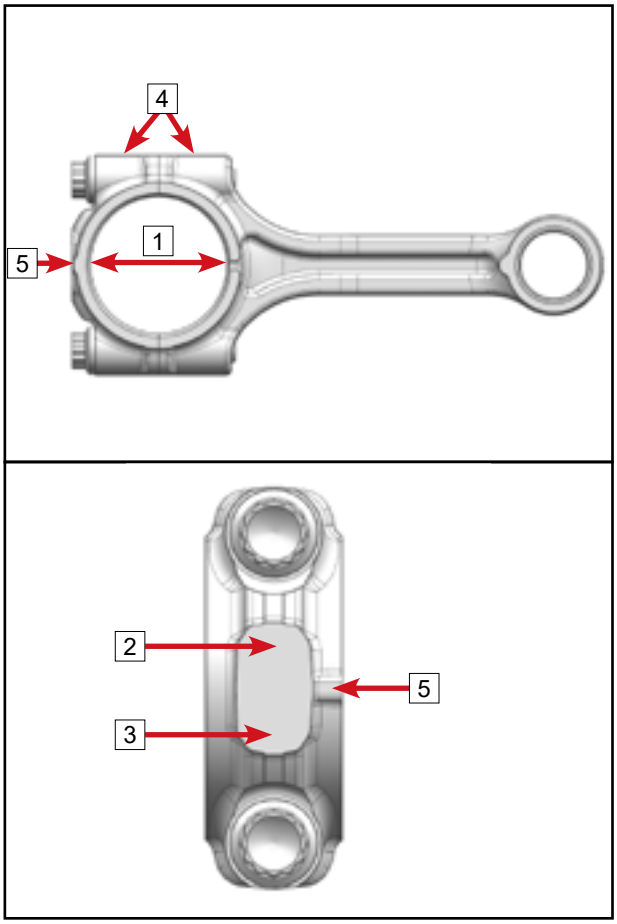

Connecting Rod Big Head Bore Diameter (New)	
Mark	Diameter 1
1	41.000 ~ 41.005 mm (1.6141 ~ 1.6143 in.)
2	41.005 ~ 41.010 mm (1.6143 ~ 1.6145 in.)
3	41.010 ~ 41.015 mm (1.6145 ~ 1.6147 in.)

Connecting Rod Weight (G - New)	
Mark	Weight Range (g)
A	386g≤G<388g
B	388g≤G<390g
C	390g≤G<392g
D	392g≤G<394g
E	394g≤G<396g
H	396g≤G<398g
J	398g≤G<400g
K	400g≤G<402g
L	402g≤G<404g
M	404g≤G<406g

NOTE

The same crankshaft must be fitted with the same weight group marked connecting rod.

© CFMOTO Powersports, Inc. This manual is subject to all applicable copyright laws. Reproduction or duplication in any form, whole or in part, is strictly prohbited.

Connecting Rod Journal Grouping

Connecting rod journal grouping is shown in the table below:

Connecting Rod Journal (New)	
Mark	Diameter B
1	37.985 ~ 37.990 mm (1.4954 ~ 1.4956 in.)
2	37.990 ~ 37.995 mm (1.4956 ~ 1.4958 in.)
3	37.995 ~ 38.000 mm (1.4958 ~ 1.4960 in.)

The position of connecting rod journal grouping marks is shown in in the image, from left to right are the grouping marks of connecting rod journal P1, P2 and P3.

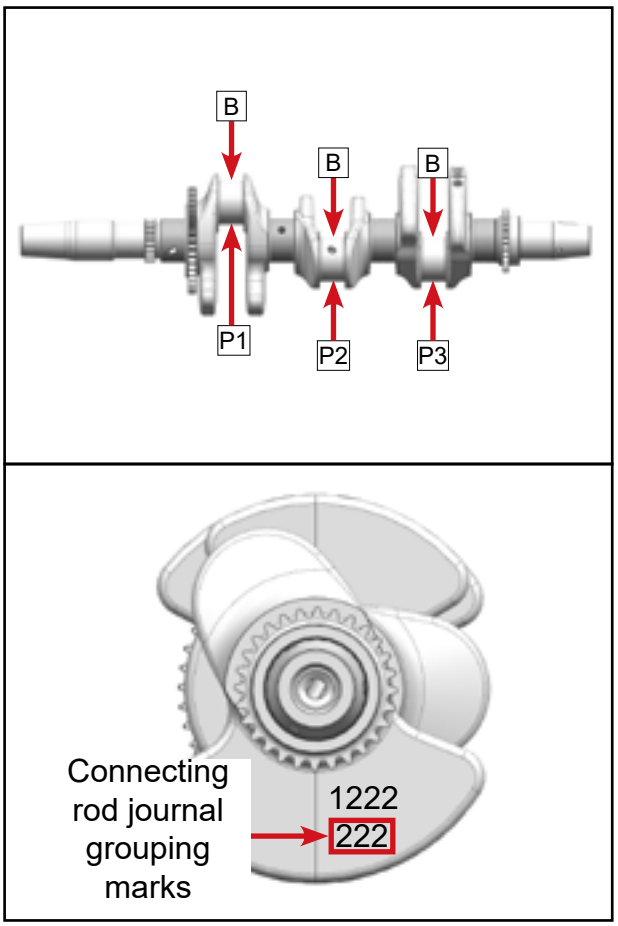

Connecting Rod Bearing Grouping

The central wall thickness T of the connecting rod bearing is grouped in the following table.

Connecting Rod Bearing (New)	
Color	Central Wall Thickness T
Red	1.494 ~ 1.497 mm (0.0588 ~ 0.0589 in.)
Green	1.491 ~ 1.494 mm (0.0587 ~ 0.0588 in.)
Black	1.488 ~ 1.491 mm (0.0585 ~ 0.0587 in.)

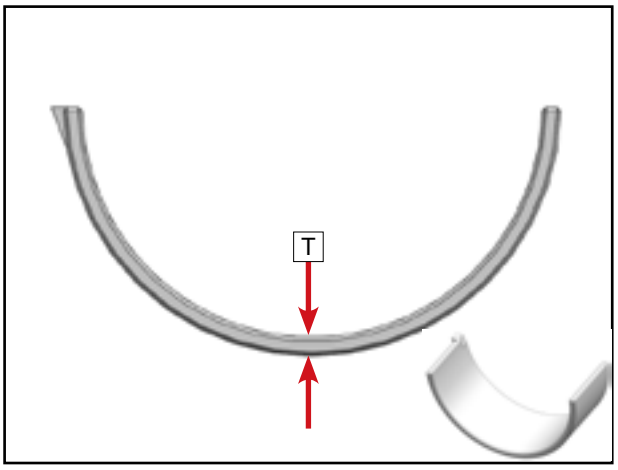

© CFMOTO Powersports, Inc. This manual is subject to all applicable copyright laws. Reproduction or duplication in any form, whole or in part, is strictly prohibited.

Selecting Connecting Rod Bearing

Select connecting rod bearing according to the table below.

IF - Connecting Rod Big End Marking is:	AND - Connecting Rod Journal Marking is:	USE - Connecting Rod Bearing Color:
3	1	Red
3	2	Red
3	3	Green
2	1	Red
2	2	Green
2	3	Black
1	1	Green
1	2	Black
1	3	Black

5.4.15 Oil Pump Assembly Inspection

Disassembly

Oil Suction Filter Removal

Remove bolts 1.

Remove oil suction filter 2.

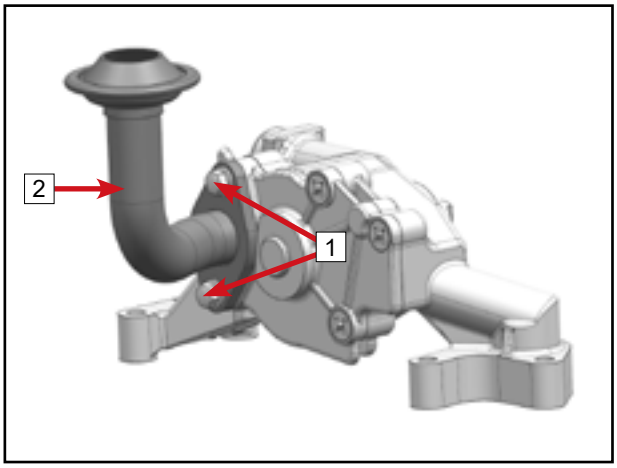

O-ring Removal

Remove O-ring 1 and 2.

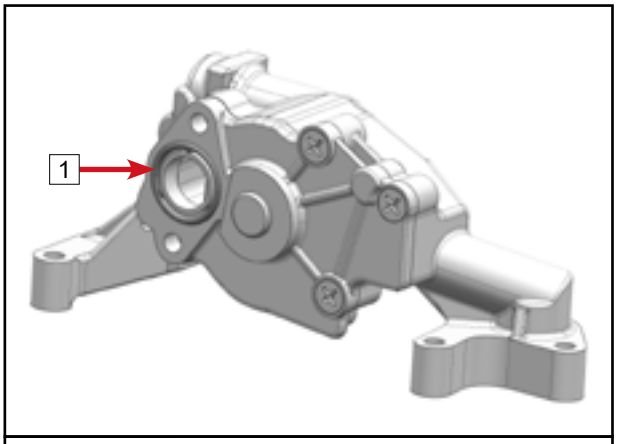

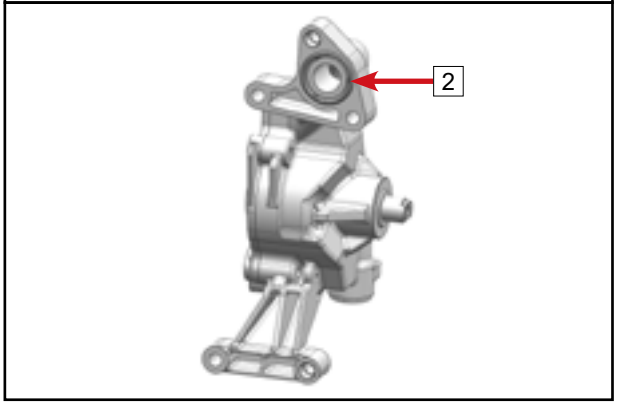

© CFMOTO Powersports, Inc. This manual is subject to all applicable copyright laws. Reproduction or duplication in any form, whole or in part, is strictly prohbited.

Oil Pressure Regulator Valve Removal

Remove bolt 1.
Remove spring 2.
Remove plunger 3.

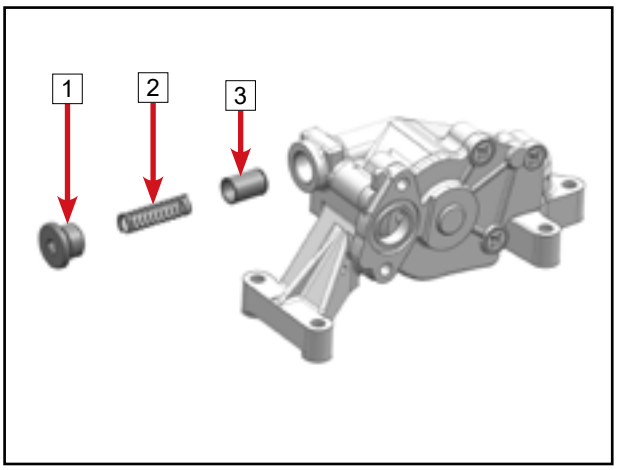

Oil Pump Removal

Remove screws 1.
Remove oil pump cover 2.

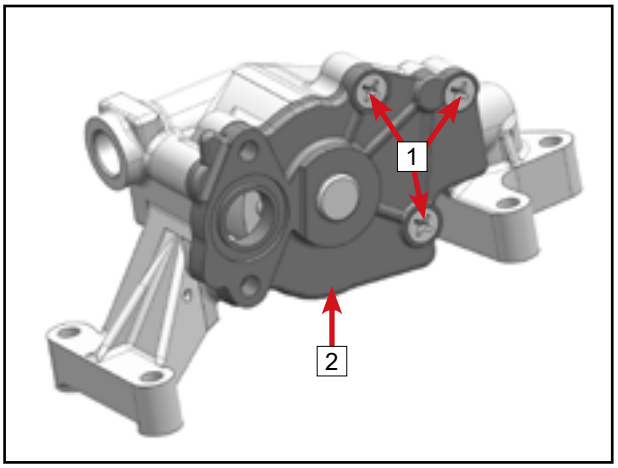

Remove dowel pins 1 (if necessary).

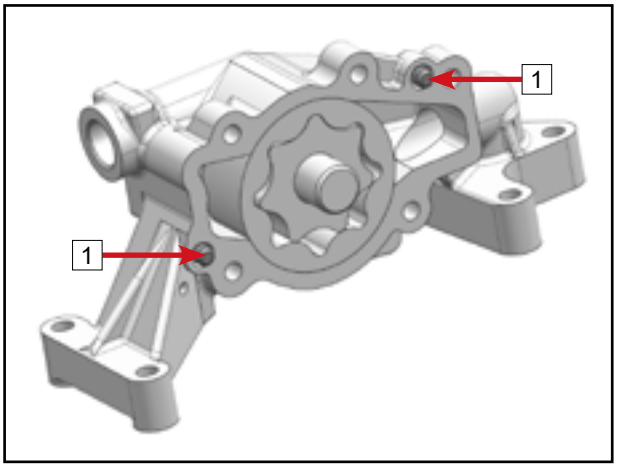

Remove oil pump shaft 1.
Remove oil pump outer rotor 2 and inner rotor 3.

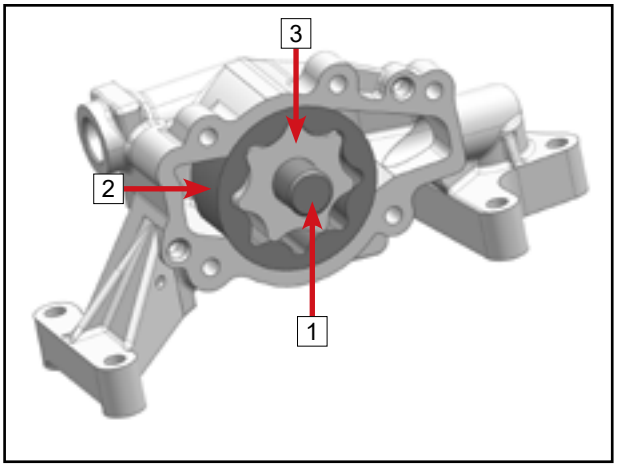

© CFMOTO Powersports, Inc. This manual is subject to all applicable copyright laws. Reproduction or duplication in any form, whole or in part, is strictly prohibited.

Inspection

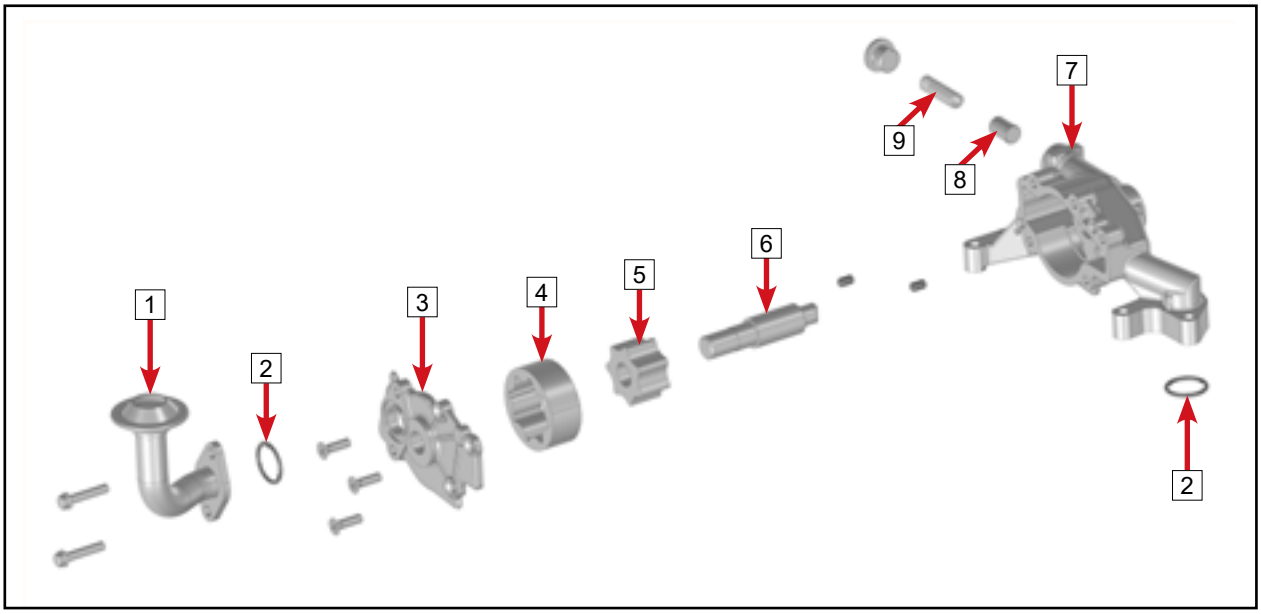

Inspect the oil suction filter assembly 1 for cracks or other damage. If damaged, replace it.
Check for cracked, hardened or otherwise damaged O-ring 2. If damaged, replace O-ring.
Inspect oil pump cover 3 for excessive wear or damage. If damaged, replace it.
Check oil pump shaft 6 for excessive wear or damage. If damaged, replace it.
Check the oil pump inner 5 and outer 4 rotors for excessive wear or damage. If damaged, replace them.
Check oil pump housing 7 for excessive wear or damage. If damaged, replace it.
Check plunger 8 for excessive wear or damage. If damaged, replace it.
Check that the plunger 8 moves smoothly in the oil pump housing 7. If plunger is stuck, replace plunger and or oil pump housing.
Measure the free length of the spring 9. If the measured length is less than the limit, replace the spring.

Oil Pressure Control Valve - Minimum spring length: 34.5 mm

Check the oil pump chain tension plate 1 for severe wear or damage, and check the torsion spring A for severe deformation or other damage. If damaged, replace the oil pump chain and tension plate.
Check the oil pump driven sprocket 2 and oil pump chain 3 for severe wear or damage. If damaged, replace with new parts.
It is recommended to replace the oil pump driven sprocket and chain as a set.

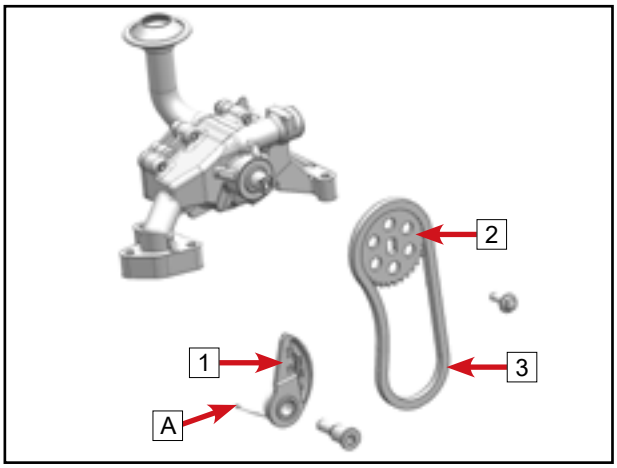

© CFMOTO Powersports, Inc. This manual is subject to all applicable copyright laws. Reproduction or duplication in any form, whole or in part, is strictly prohibited.

Use a feeler gauge to measure the clearance A between the outer rotor and oil pump housing, and the clearance B between the inner and outer rotors.

Oil Pump Rotor Clearance	
Outer rotor and oil pump housing clearance	A ≤ 0.25 mm
Inner and outer rotor clearance	B ≤ 0.25 mm

If the measured value exceeds the specified range, replace the inner and outer rotors of the oil pump, and if necessary, replace the oil pump housing.

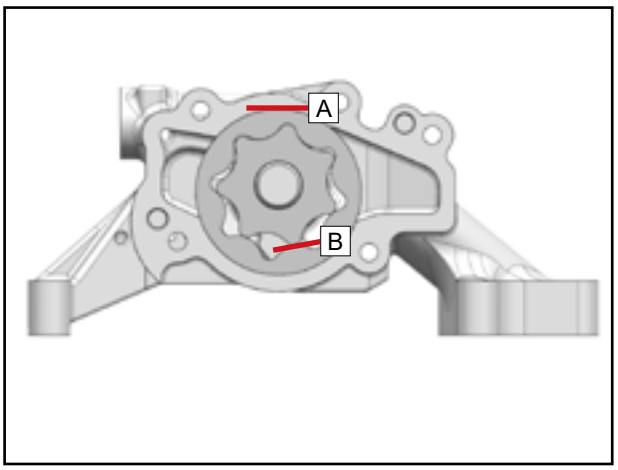

Use a micrometer to measure the thickness C of the outer rotor.

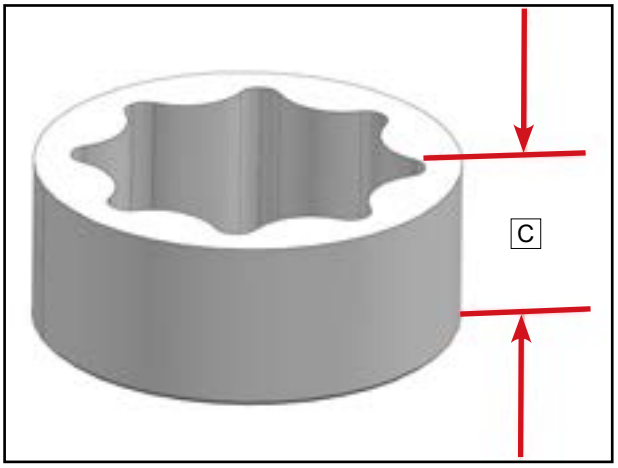

Measure the depth D of the oil pump hole in the oil pump housing with depth ruler.

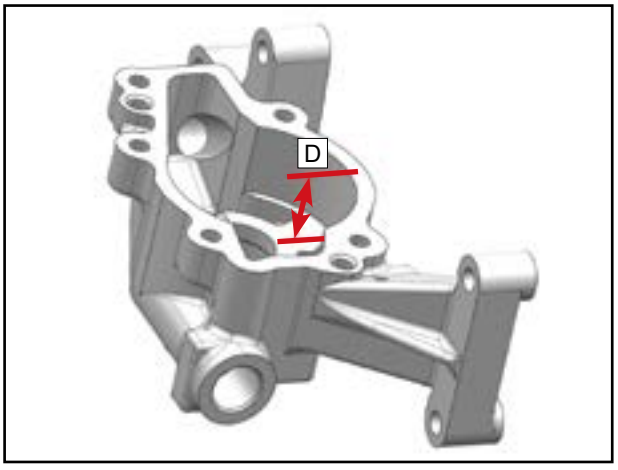

The axial clearance of the oil pump is obtained by subtracting the hole depth D from the rotor thickness C.

Oil Pump Axial Clearance	
Service Limit	0.15 mm

NOTE
When the axial wear of the oil pump rotor increases, oil pressure will decrease.

© CFMOTO Powersports, Inc. This manual is subject to all applicable copyright laws. Reproduction or duplication in any form, whole or in part, is strictly prohibited.

Assembly
Clean all parts thoroughly before assembly.

Oil Pump Installation
Coat oil pump shaft and oil pump rotors with engine oil.
Install oil pump outer rotor [2] and inner rotor [3] into oil pump housing.
Install the oil pump shaft [1]. (Small end facing inward)

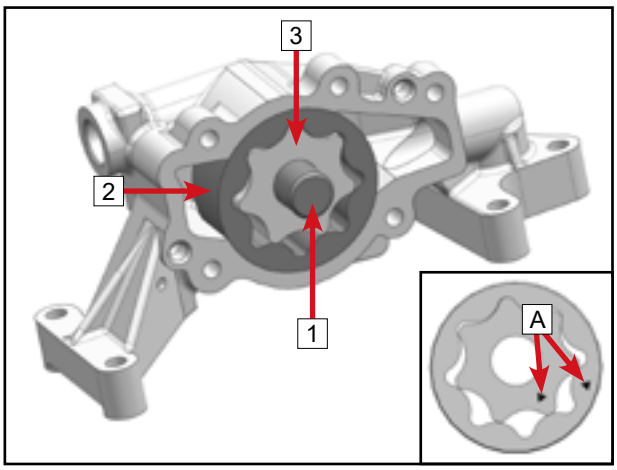

NOTE
The marks [A] on the rotors of the oil pump face inward.

Install dowel pins [1] (If removed).

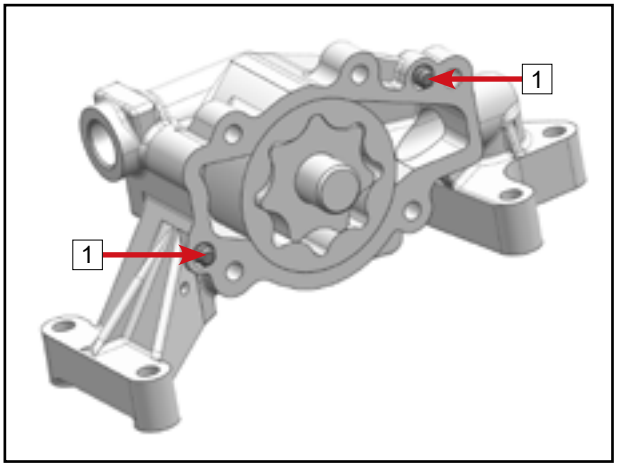

Install oil pump cover [2] into position.
Install screws [1], then tighten to the specified torque.

Oil Pump Cover Screws [1]	
Torque	10 N•m (7.3 ft-lb.)

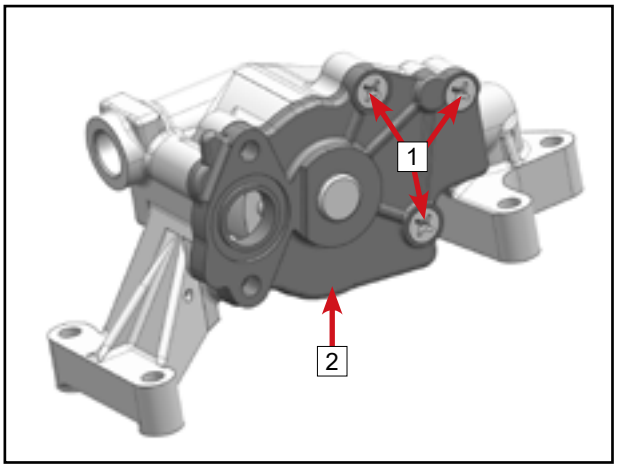

After the oil pump assembly is completed, rotation of oil pump shaft should be smooth without sticking.

Oil Pressure Regulator Valve Installation
Oil the plunger and spring.
Install plunger [3].
Install spring [2].
Install bolt [1], then tighten to the specified torque.

Oil Pressure Regulator Valve Bolt [1]	
Torque	28 N•m (20.6 ft-lb.)

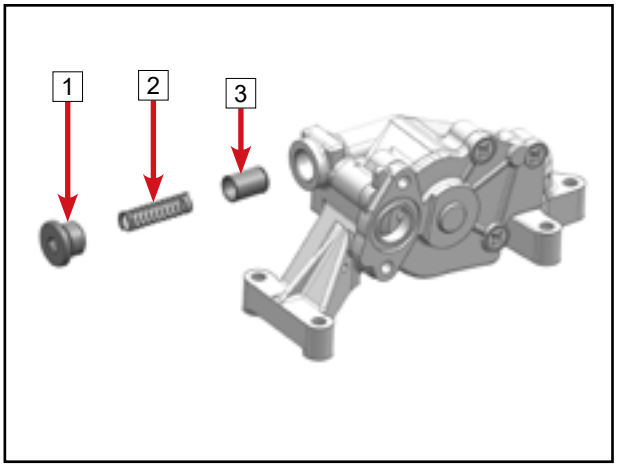

© CFMOTO Powersports, Inc. This manual is subject to all applicable copyright laws. Reproduction or duplication in any form, whole or in part, is strictly prohibited.

O-ring Installation

Apply oil to O-ring 1 and 2, then place in to position.

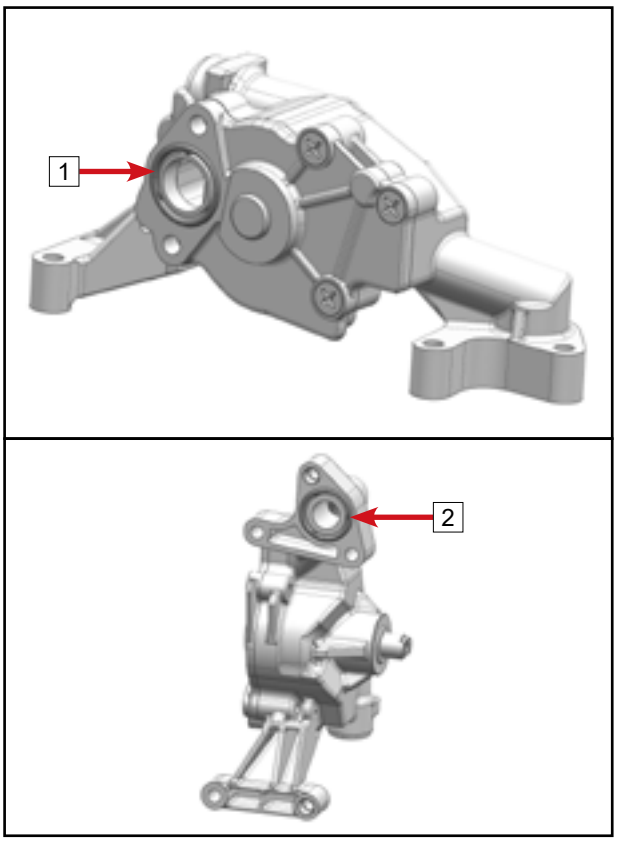

Oil Suction Filter Assembly Installation

Install oil suction filter assembly 2 to place.

Install bolts 1, then tighten to the specified torque.

Oil Suction Filter Bolts 1	
Torque	10 N•m (7.3 ft-lb.)

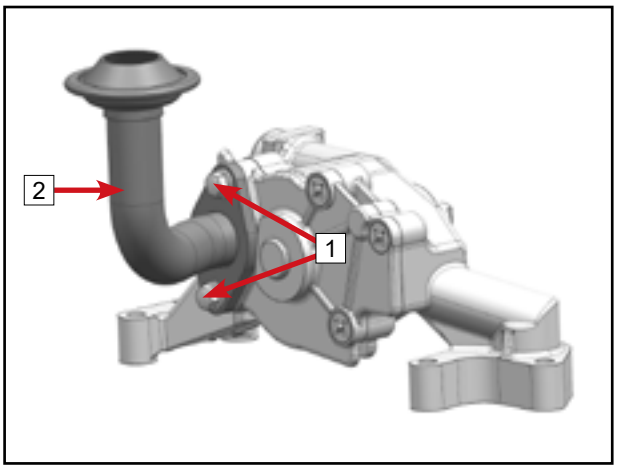

© CFMOTO Powersports, Inc. This manual is subject to all applicable copyright laws. Reproduction or duplication in any form, whole or in part, is strictly prohibited.

5.4.16 Electric Starter Drive Inspection

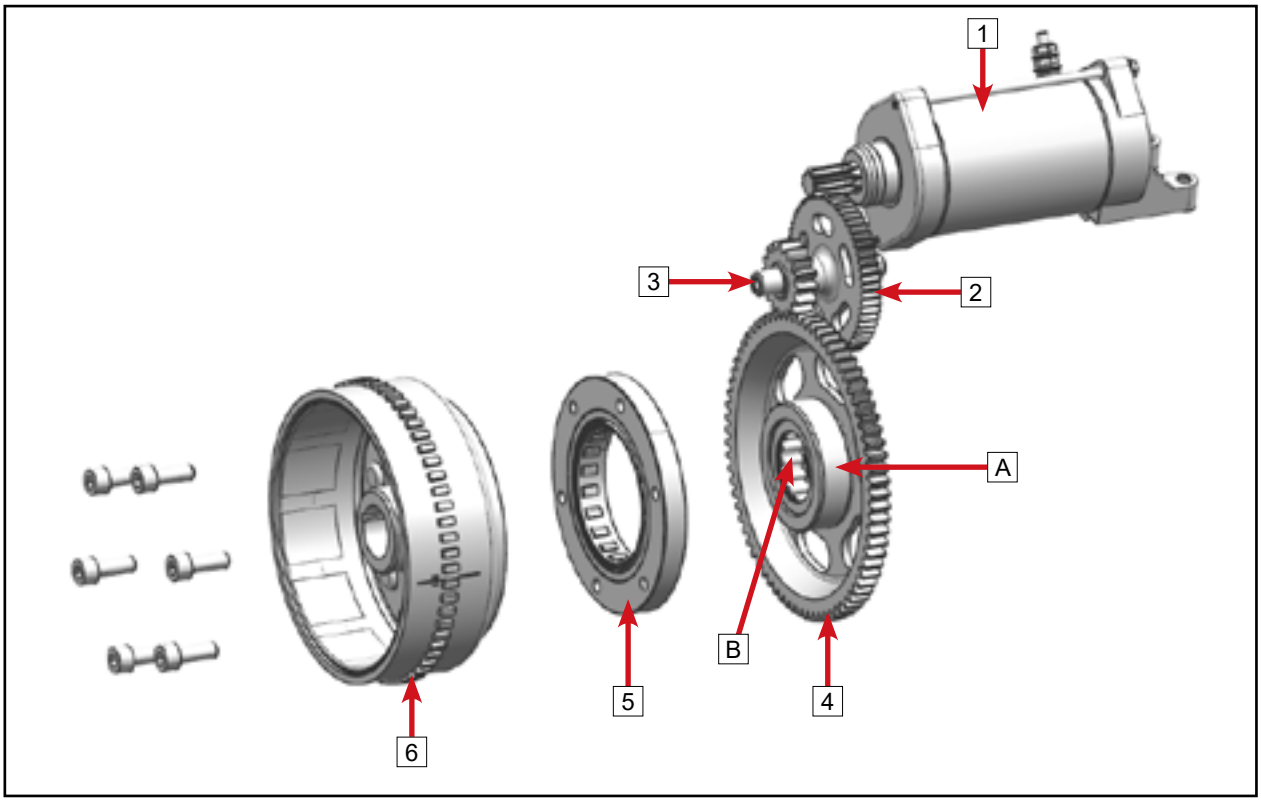

Check the gear teeth of the starter motor [1] for excessive wear or damage. If damaged, replace it.
Check the starter dual gear [2] for excessive wear or damage. If damaged, replace it.
Check for excessive wear or damage to the dual gear shaft [3]. If damaged, replace it.
Check the starter driven gear assembly [4] for the following conditions:
- Excessive wear or damage to the gear teeth
- Excessive wear or damage to the clutch cylindrical surface [A]
- Excessive wear or damage to the needle roller bearing [B]

Replace the starter driven gear components if there is excessive wear or damage in any area.
Inspect the overriding clutch assembly [5] for excessive wear or damage. If damaged, replace it.
Check the magneto rotor [6] for the following conditions:
- Scratches or damage to the inner taper
- Excessive wear or damage to the keyway
- Tilted or damaged trigger teeth on the outer ring of the rotor.

Replace the magneto rotor if there is any abnormality found.

© CFMOTO Powersports, Inc. This manual is subject to all applicable copyright laws. Reproduction or duplication in any form, whole or in part, is strictly prohbited.

5.4.16.1 Overriding Clutch Assembly Inspection

Insert the starter driven gear [1] into the overriding clutch by rotating it clockwise [A] without forcing it.

Check the locking action of the starter driven gear [1].

If the starter driven gear cannot turn clockwise [A] or does not lock when turned counterclockwise, replace the overriding clutch.

NOTE
The overriding clutch and starter driven gear must be replaced at the same time if they are damaged.

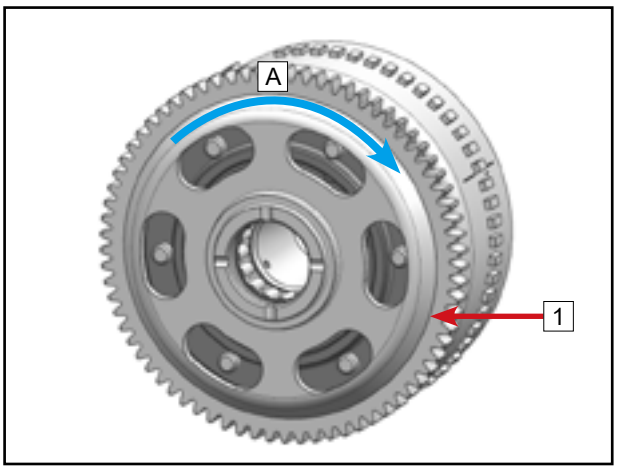

Removal

Remove starter driven gear assembly [1].

Remove screws [2].

Remove overriding clutch assembly [3].

NOTE
If the overriding clutch is not faulty, it does not need to be dismantled.

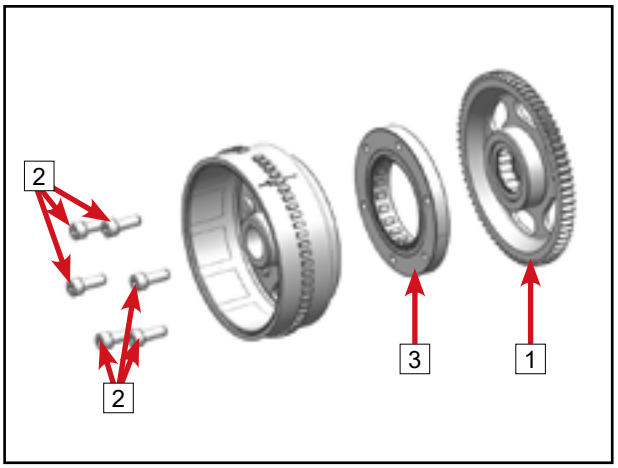

Installation

Install the overriding clutch assembly [3] on the magneto rotor [4].

Apply 243 thread locker to the bolts [2].

Install bolts [2], then diagonally cross-tighten to the specified torque.

Overriding Clutch Bolts [2]	
Torque	27 N•m (19.9 ft-lb.)

Insert the starter driven gear assembly [1] clockwise into the overriding clutch without forcing it.

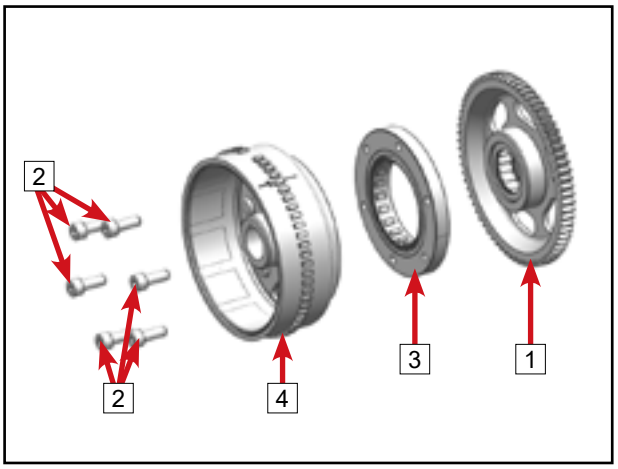

5.4.17 Thermostat Inspection

Removal

Remove bolts [1].

Remove thermostat cover [2].

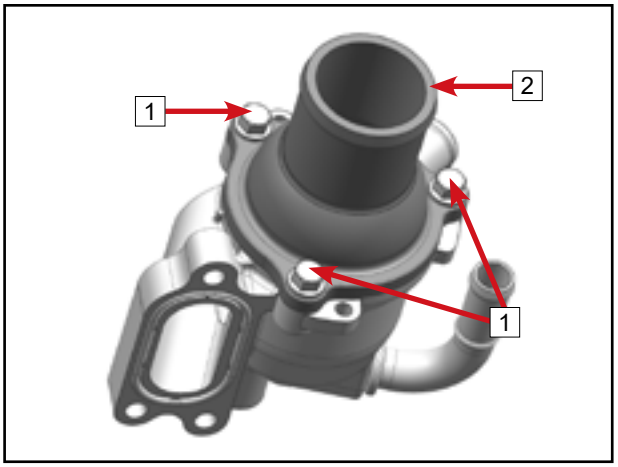

© CFMOTO Powersports, Inc. This manual is subject to all applicable copyright laws. Reproduction or duplication in any form, whole or in part, is strictly prohibited.

Remove thermostat [1] and thermostat seat seal ring [2] from thermostat seat [3].

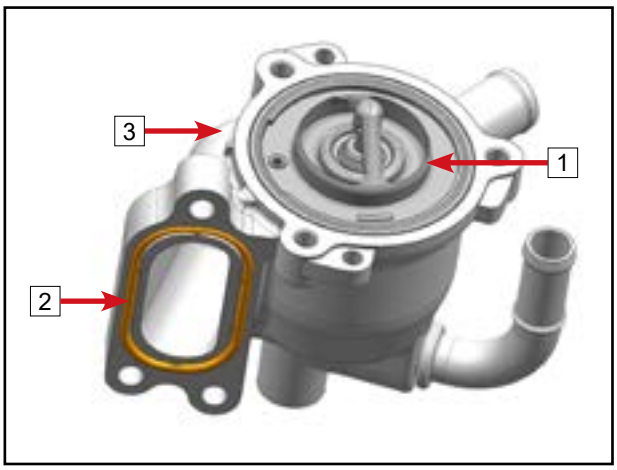

Inspection

Inspect the thermostat [1] at room temperature. Replace with a new thermostat if the valve is open.

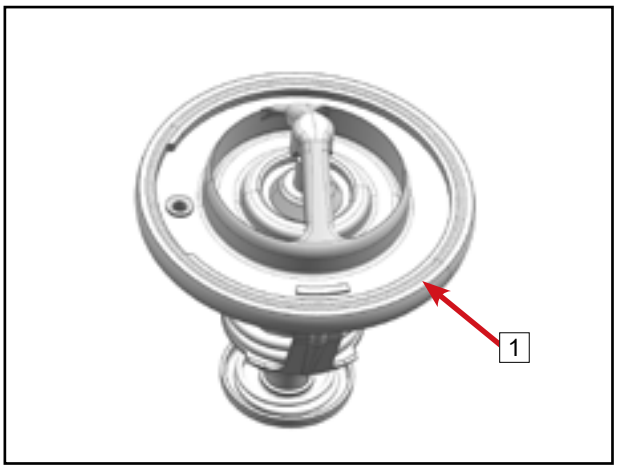

For valve open temperature inspection, hang the thermostat [A] in a container of water. The thermostat should be fully immersed without touching container wall or bottom.

Hang a thermometer [B] at the same level without touching wall or bottom. The thermal position [C] must be equal.

Heat the water slowly, making note of the temperature that the thermostat begins to open, and its full open temperature.

Replace with a new thermostat if beyond the specification.

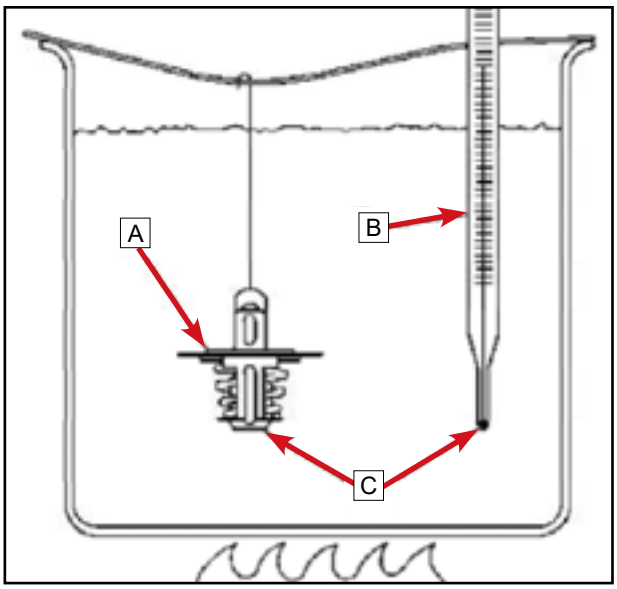

Thermostat Valve Opening Temperature	
Opening	73 ~ 77°C
Full open	88°C Full open lift ≥8mm

© CFMOTO Powersports, Inc. This manual is subject to all applicable copyright laws. Reproduction or duplication in any form, whole or in part, is strictly prohbited.

Check the thermostat cover [1] for damage. If damaged, replace it.

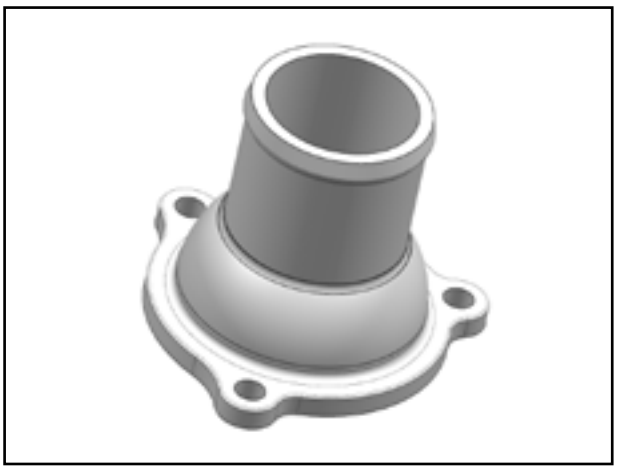

Check thermostat seat [1] for damage. If damaged, replace it.
Check for a cracked, hardened or otherwise damaged thermostat seat seal ring [2]. If damaged, it.

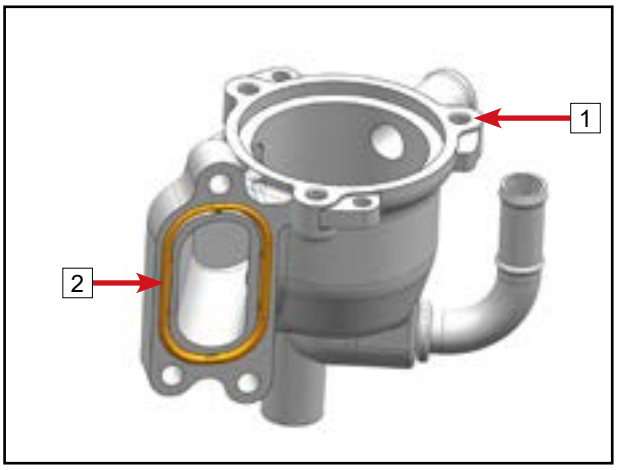

Installation
Install the seal ring [2] on the thermostat seat [1].

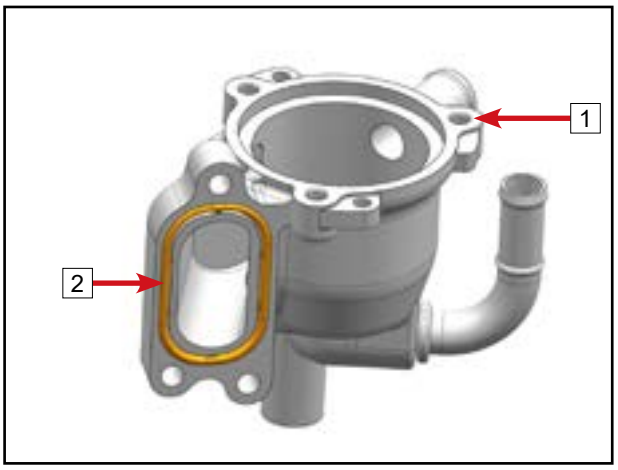

Install the thermostat [1] on the thermostat seat, aligning the hole [A] with the protrusion [B].

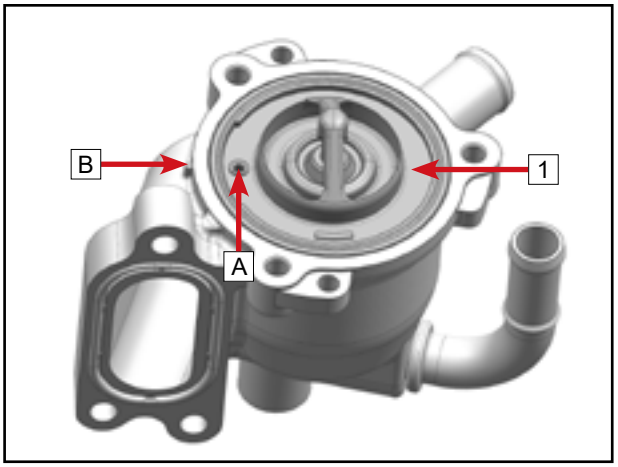

© CFMOTO Powersports, Inc. This manual is subject to all applicable copyright laws. Reproduction or duplication in any form, whole or in part, is strictly prohibited.

Place thermostat cover 2 into position.

NOTE
The orientation mark A on the thermostat cover for the coolant hose is shown in the image.

Install bolts 1, then tighten to the specified torque.

Thermostat Cover Bolts 1	
Torque	10 N•m (7.3 ft-lb.)

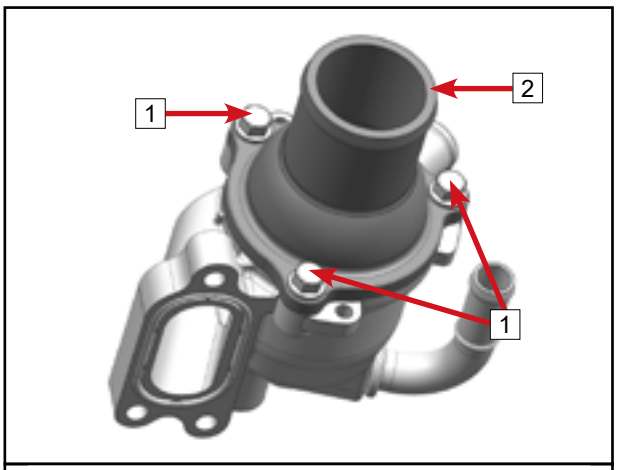

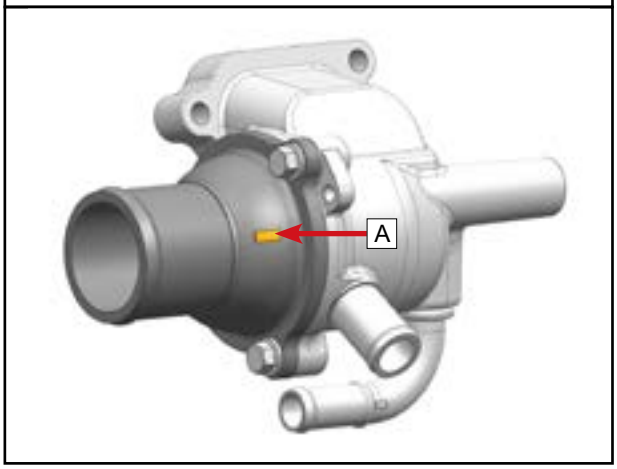

5.4.18 Oil Cooler Inspection

Check the oil cooler seal 1 and O-ring 2 for damage and hardness. Replace if any.
Clean the oil cooler 3 by blowing out the oil passages and coolant passages with an air gun.
Check the oil cooler for cracks or other damage. If damaged, replace it.

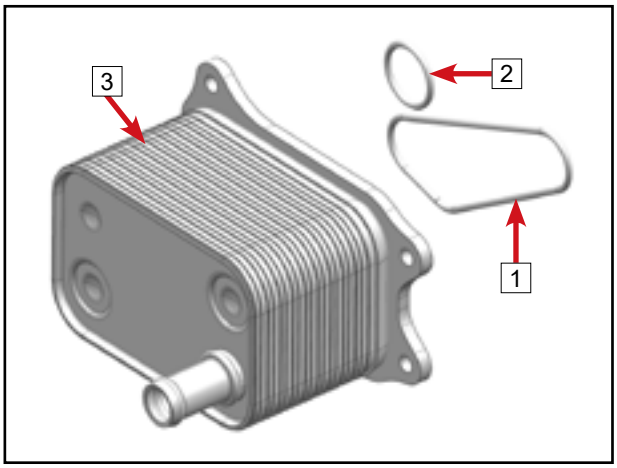

5.4.19 Water Hose Inspection

Check the oil cooler outlet hose assembly 1 for coolant leaks and breakage. If coolant leakage or breakage is found, replace with new parts.

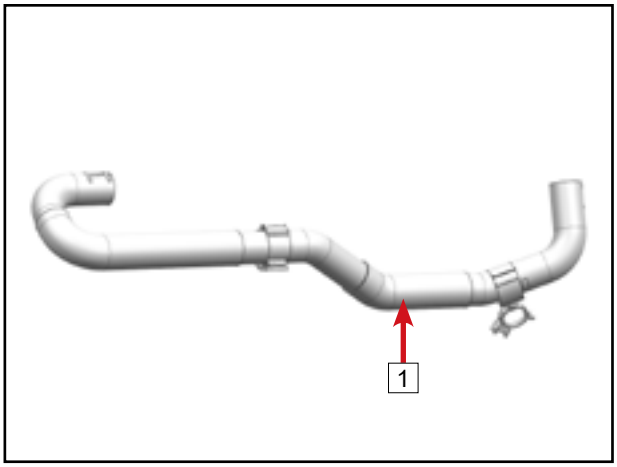

© CFMOTO Powersports, Inc. This manual is subject to all applicable copyright laws. Reproduction or duplication in any form, whole or in part, is strictly prohibited.

Inspect the recirculation return pipe assembly 1 for coolant leaks and breaks. If coolant leaks or breaks are found, replace with new parts.

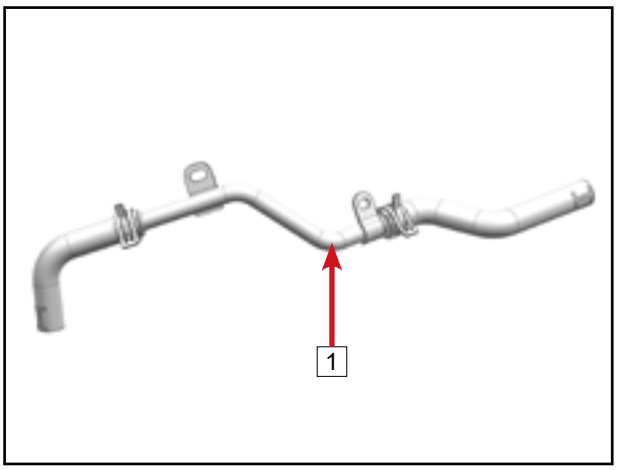

Check whether there are cracks or other damage in the thermostat outlet pipe assembly 1. If any, replace with a new one. Check whether there is any coolant leakage or damage to the water outlet hose 2 to the thermostat housing. If damaged, replace with a new parts. When assembling, align mark A with mark B.

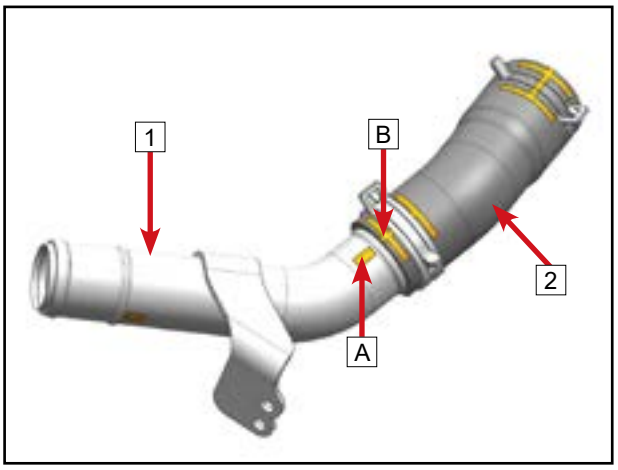

© CFMOTO Powersports, Inc. This manual is subject to all applicable copyright laws. Reproduction or duplication in any form, whole or in part, is strictly prohibited.

5.5 Engine Reassembly

⚠WARNING
Once a retainer is removed from a shaft, it cannot be reused and must be assembled with a new one. When assembling a new retainer, the open end must not be widened too much. After installating, make sure it is fully installed to place.

NOTE
Before assembly, clean all parts and check to make sure that there is no misassembly or omission of each part.

NOTE
Removed gaskets cannot be reused and must be replaced with new ones, and gasket material remaining on sealing surfaces or parts must be cleaned before assembly.

5.5.1 Piston and Connecting Rod Installation

NOTE
The three pistons are installed in the same method.

NOTE
Ensure that all parts are reinstalled in their initial position as marked during disassembly.

Place the piston on the associated connecting rod.

NOTE
When the connecting rod is correctly assembled, the round mark [A] on the top of the piston is oriented in the same direction as the protrusion [B] on the connecting rod cap.

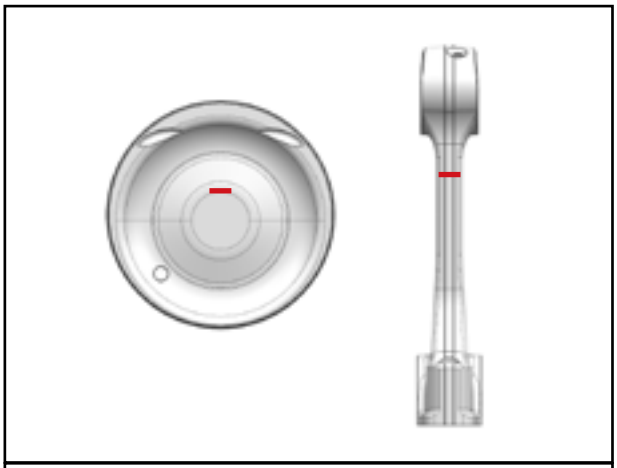

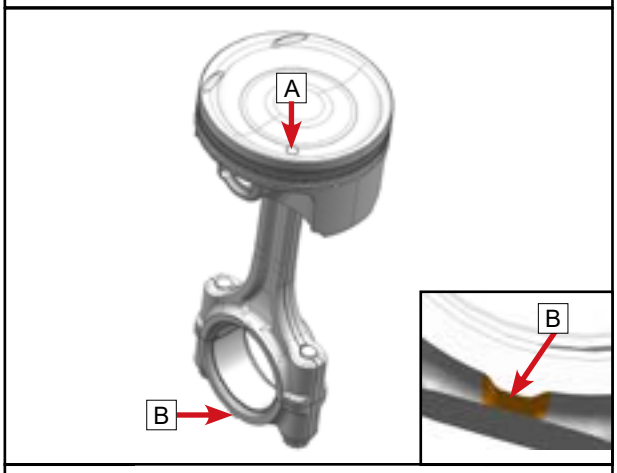



Coat the piston pin with oil.
Insert the piston pin [1] into the piston and through the connecting rod.

© CFMOTO Powersports, Inc. This manual is subject to all applicable copyright laws. Reproduction or duplication in any form, whole or in part, is strictly prohbited.

Install new piston pin retainer 1.

NOTE
The removed piston pin retainer cannot be used again and must be replaced with a new one.

Make sure the piston pin retainer gap A is staggered away from the piston groove notch B.

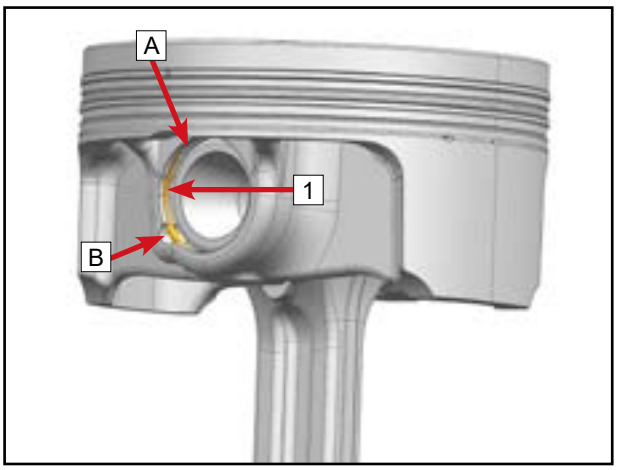

Make sure the opening of the piston ring is in the correct position, as shown on the right.
A: Oil ring lining ring opening position
B: Oil ring scraper ring (upper) opening position
C: First gas ring opening position
D: Second gas ring opening position
E: Oil ring scraper ring (lower) opening position

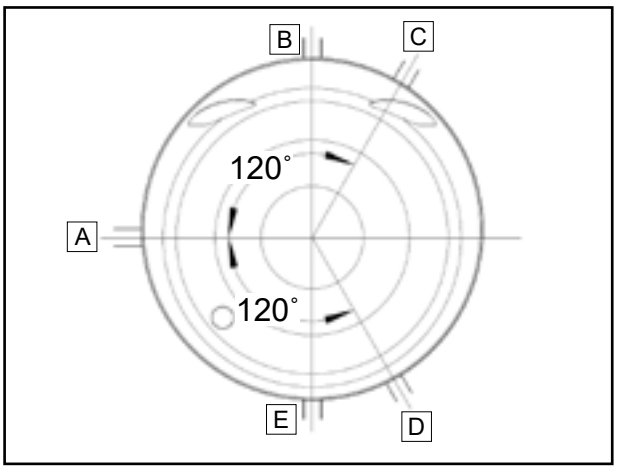

Apply oil to the cylinder bore.
Install the piston and connecting rod into each cylinder.

NOTE
Do not damage the cylinder or piston rings.

Make sure the round mark A on the top of the piston is facing the chain chamber side of the cylinder body.

NOTE
If the piston is mounted in the wrong direction (mark A), the engine will be seriously damaged.

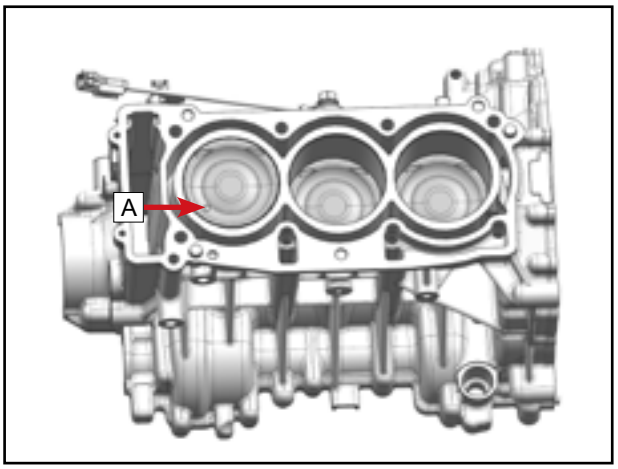

© CFMOTO Powersports, Inc. This manual is subject to all applicable copyright laws. Reproduction or duplication in any form, whole or in part, is strictly prohbited.

5.5.2 Crankshaft and Balance Shaft Installation

Turn over the cylinder body.

Coat the installed main bearings and connecting rod bearings with oil.

Suspend the timing chain [1] on the crankshaft timing sprocket.

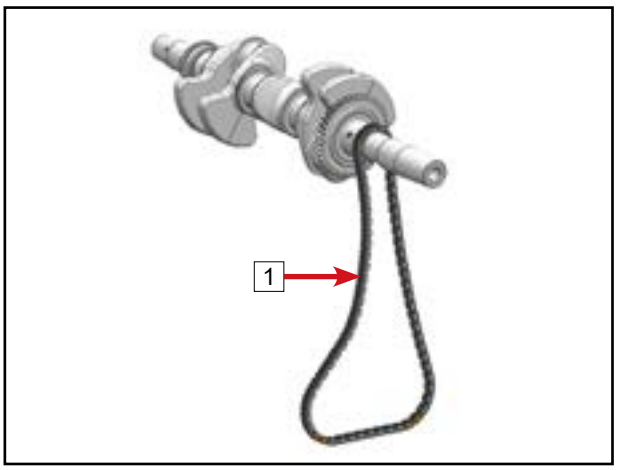

Place crankshaft assembly [1] and timing chain [2].

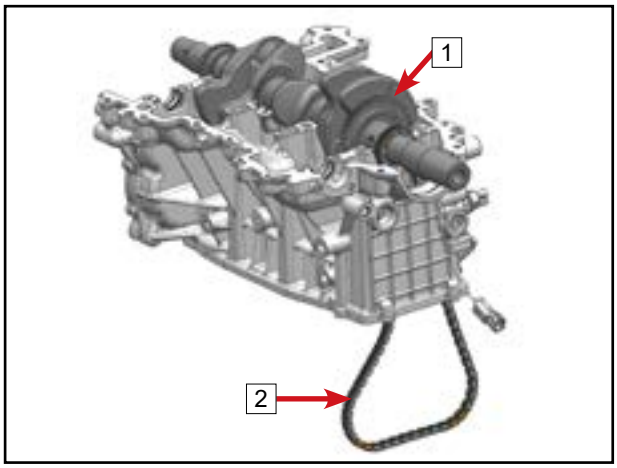

Coat the connecting rod bearings with oil.

Install connecting rod caps [2], [3] and [4] on the associated connecting rods.

NOTE
The matching marks [A] on the connecting rod and the connecting rod cap must be identical and clear.

Coat the connecting rod bolt threads [1] with oil.

NOTE
Be sure to use new connecting rod bolts and strictly follow tightening procedures.

Install new connecting rod bolts [1], tighten in 2 steps.

Step 1 Torque	20 N•m (14.7 ft-lb.)
Step 2 Angle	150° ±5°

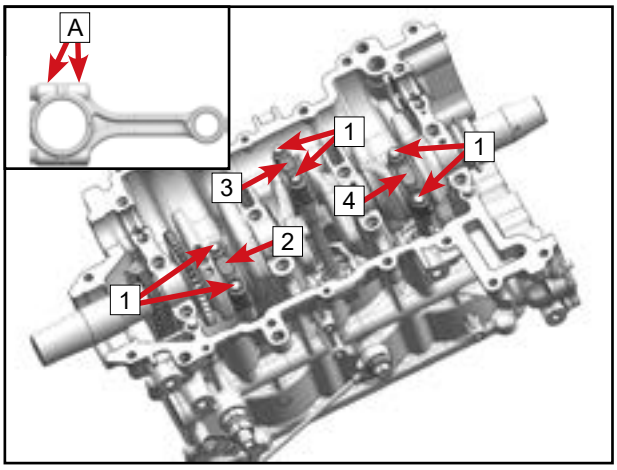

© CFMOTO Powersports, Inc. This manual is subject to all applicable copyright laws. Reproduction or duplication in any form, whole or in part, is strictly prohibited.

NOTE
Rotate the crankshaft so the piston of cylinder 1 (timing chain side) is at TDC. Do not rotate the crankshaft until the camshafts are installed.

When the piston of cylinder 1 is at TDC, the correct position of the dot mark [B] on the crankshaft drive gear is shown in the image.

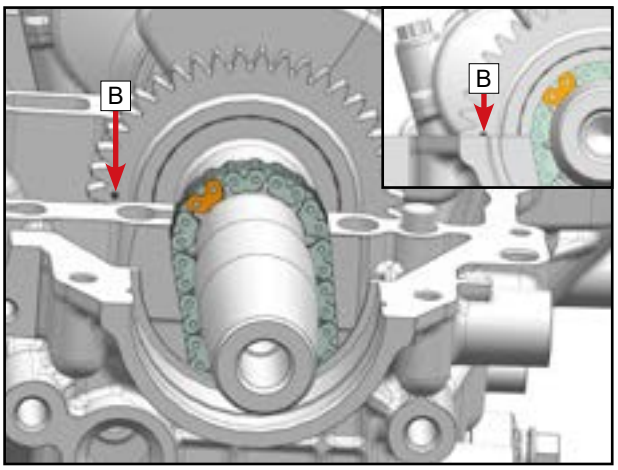

Coat the installed balance shaft plain bearings with oil.
Install the balance shaft assembly [1].

NOTE
Balance shaft assembly and crankshaft assembly must be paired according to the table below.

IF: Balance Shaft Assembly Grouping Mark is	Crankshaft Assembly Grouping Mark IS:
A	B
B	A

The grouping of balance shaft and crankshaft assembles is detailed in section 5.4.2.

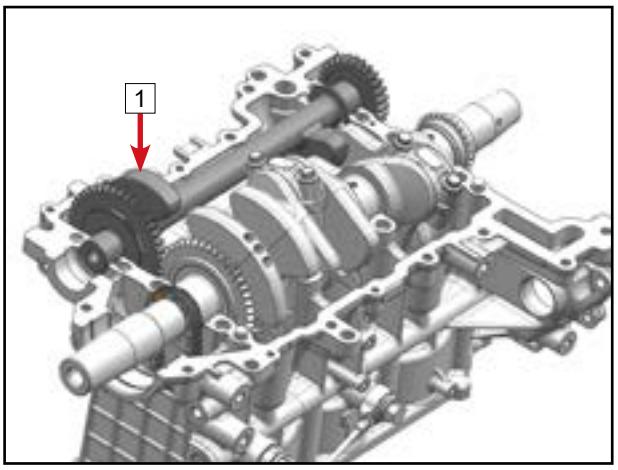

NOTE
Keep the mark [A] aligned with the mark [B].

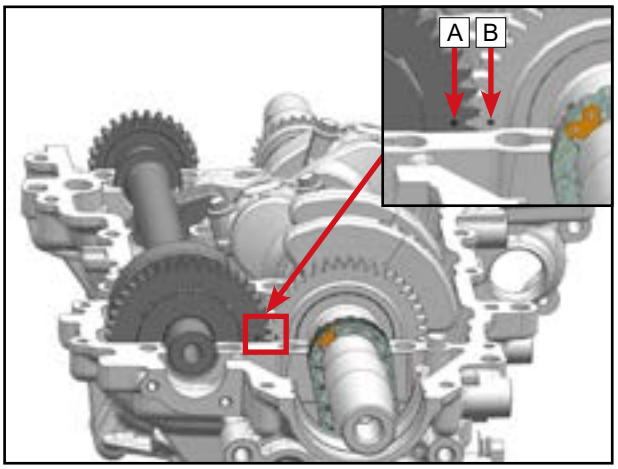

© CFMOTO Powersports, Inc. This manual is subject to all applicable copyright laws. Reproduction or duplication in any form, whole or in part, is strictly prohibited.

Adjust the timing chain to the correct position.

NOTE
Make sure the golden chain piece A on the timing chain is aligned with the timing dot mark D on the crankshaft sprocket.

NOTE
Golden chain pieces A B and C on the timing chain align with the timing marks on the crankshaft and camshaft sprockets during manufacturing, but are not a requirement for proper timing during overhaul or repair.

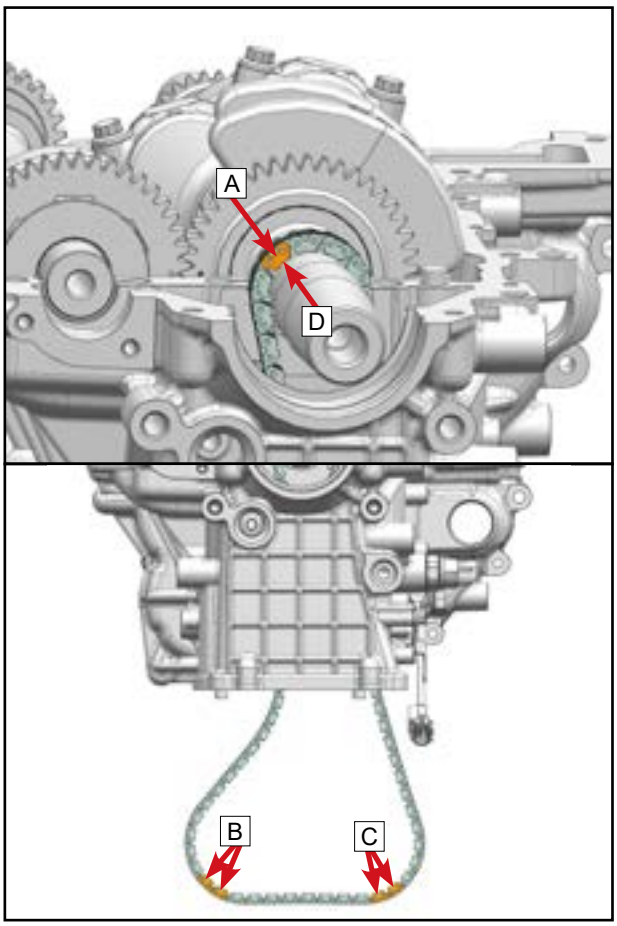

Golden chain pieces B and C on the timing chain are located on the camshaft side.

5.5.3 Lower Crankcase Installation

Ensure that the sealing surface of the crankcase is clean, dry and free of oil. Ensure that dowel pins 1 are installed.

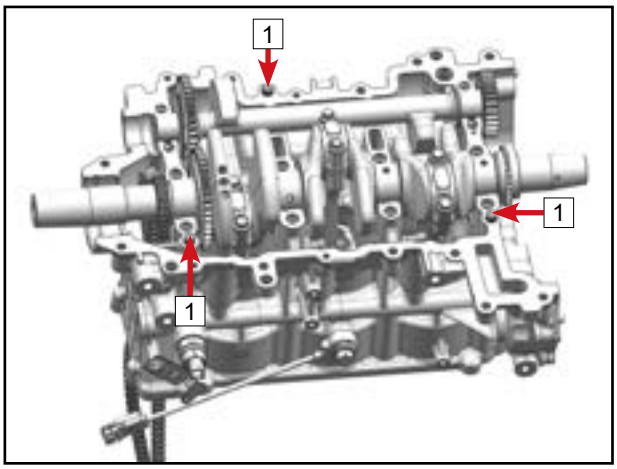

© CFMOTO Powersports, Inc. This manual is subject to all applicable copyright laws. Reproduction or duplication in any form, whole or in part, is strictly prohibited.

As shown on the right, apply an appropriate amount of 5900 flange sealant 1 on the sealing surface of the lower crankcase, coating should be uniform and continuous.

NOTE
From applying the flange sealant to completing the installation of the lower crankcase and tightening the crankcase bolts, it should be controlled within 10 minutes. It is recommended to keep everything needed close by to save time.

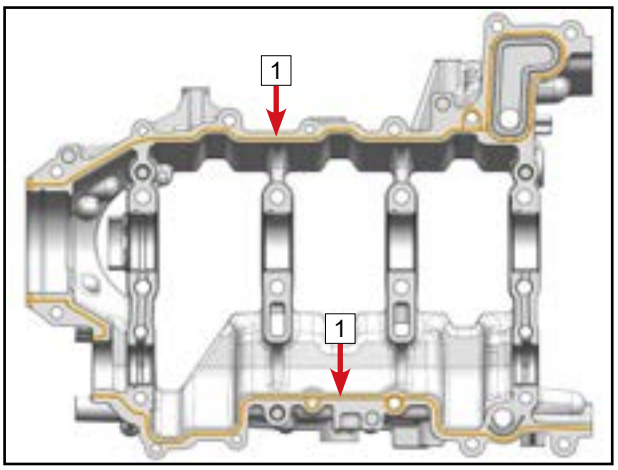

Coat the installed main bearings and balance shaft bearings with oil.
Install the lower crankcase 5 onto the cylinder body.
Install main bearing bolts (M10×1.25×88) 4, bolts M8×73 3, bolts M8×28 2 and bolts M6×25 1.

NOTE
Be sure to use new main bearing bolts 4 and strictly follow tightening procedures.

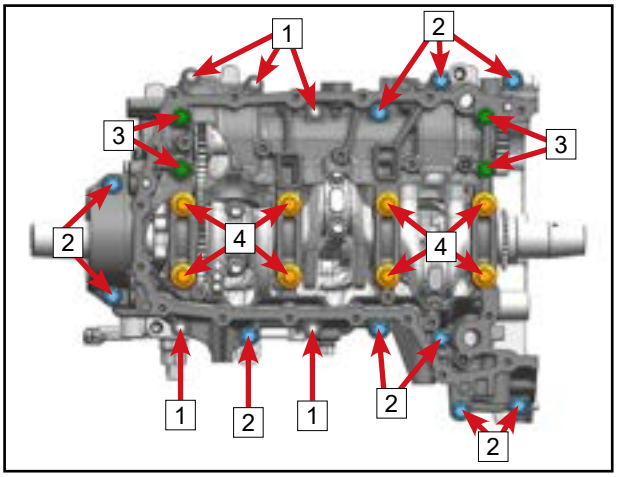

Tighten the crankcase bolts in the sequence shown with the following steps:
Step 1: Bolts 1 ~ 22 tighten to 20 N•m (14.7 ft-lb.).
Step 2: Bolts 1 ~ 8 tighten to 40 N•m (29.5 ft-lb.).
Step 3: Bolts 1 ~ 8 twist 90°, bolts 9 ~ 22 tighten to 27 N•m (19.9 ft-lb.).
Step 4: Bolt 23 ~ 27 tighten to 10 N•m (7.3 ft-lb.).

Remove excess flange sealant.

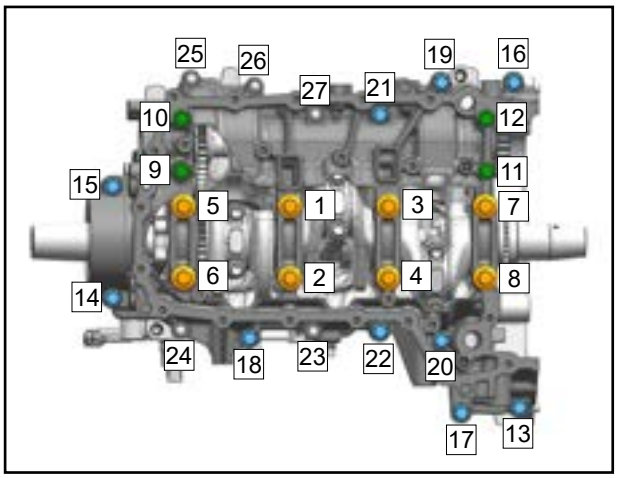

© CFMOTO Powersports, Inc. This manual is subject to all applicable copyright laws. Reproduction or duplication in any form, whole or in part, is strictly prohibited.

Install oil baffle 2.
Install bolts 1, diagonally cross-tighten to the specified torque.

Oil Baffle Bolts 1	
Torque	10 N•m (7.3 ft-lb.)

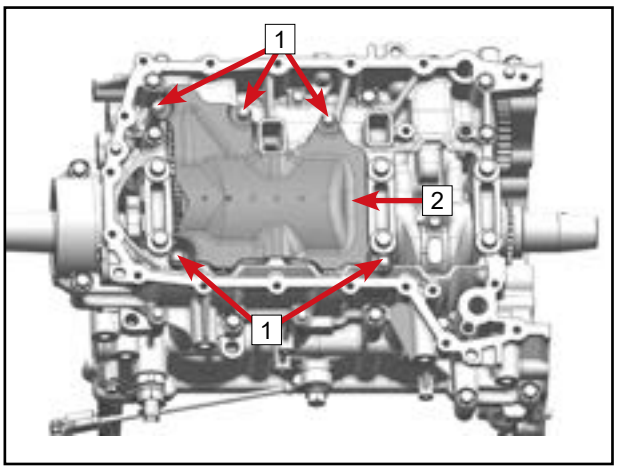

Ensure that the sealing surfaces of the lower crankcase and balance shaft end cover are clean, dry, and oil-free.
As shown on the right, apply an appropriate amount of 5900 flange sealant 1 to the sealing surface of the balance shaft end cover, coating should be uniform and continuous.

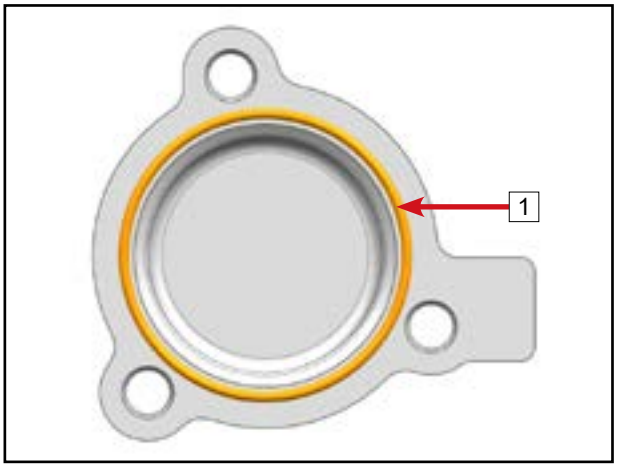

NOTE
From applying the flange sealant to completing the installation of the balance shaft end cover and tightening the end cover bolts, it should be controlled within 10 minutes. It is recommended to keep everything needed close by to save time.

Place the balance shaft end cover 1 in position as shown.
Install bolts 2, then tighten to the specified torque.

Balance Shaft End Cover Bolts 2	
Torque	10 N•m (7.3 ft-lb.)

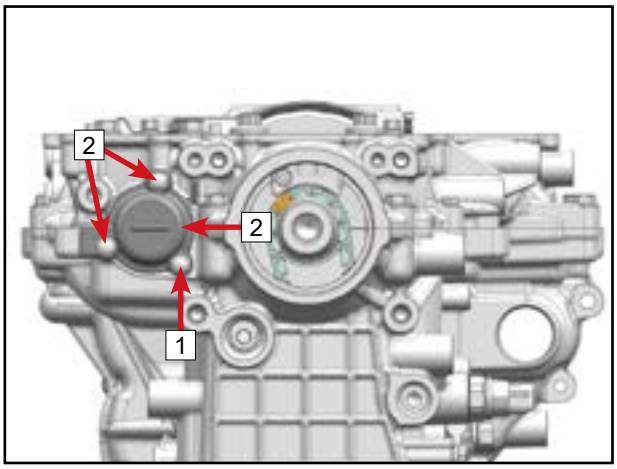

Remove excess flange sealant.

Coat roller bearing 6207 1 with oil.
Install roller bearing 6207 1 with the marked side facing outward.
Install a new retainer 2 with the rounded side facing the bearing 1.

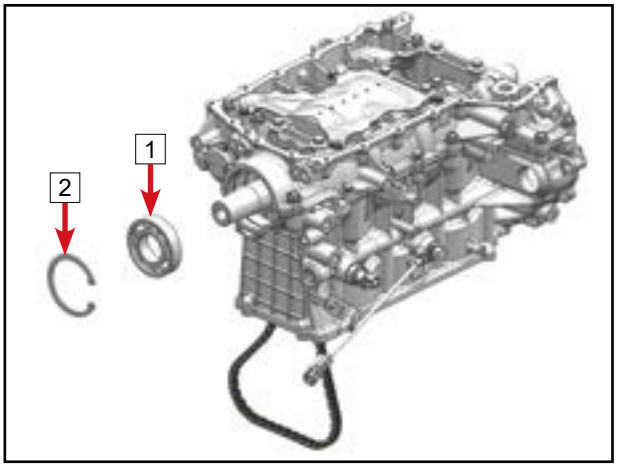

© CFMOTO Powersports, Inc. This manual is subject to all applicable copyright laws. Reproduction or duplication in any form, whole or in part, is strictly prohibited.

NOTE
Before oil seal installation, clean the oil seal mounting hole 1 and remove the oil.

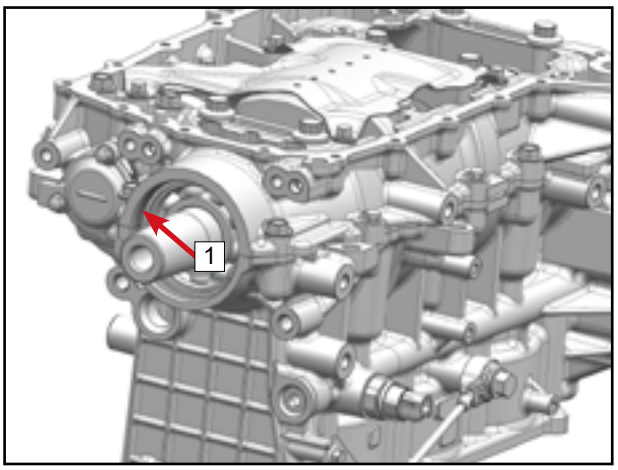

Apply appropriate amount of 648 retaining adhesive to the joint positions 1 of the oil seal mounting hole.

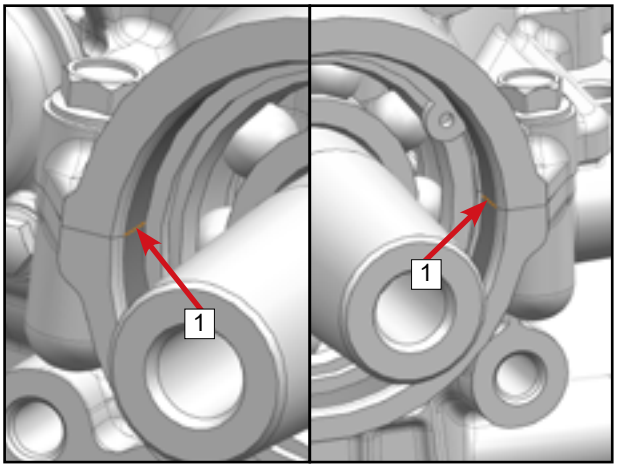

Install a new oil seal 1.

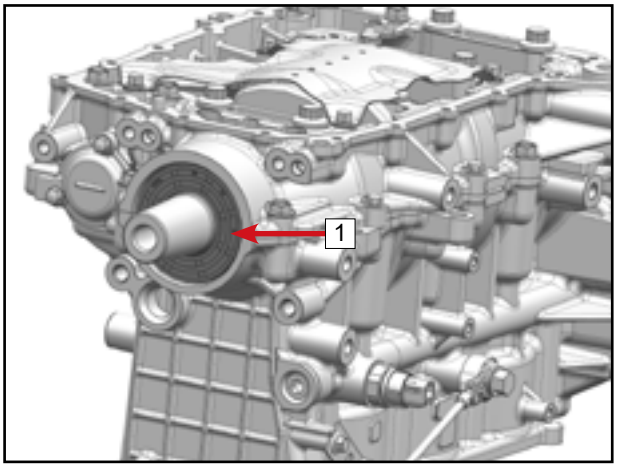

© CFMOTO Powersports, Inc. This manual is subject to all applicable copyright laws. Reproduction or duplication in any form, whole or in part, is strictly prohbited.

5.5.4 Oil Pump Assembly Installation

Install dowel pins 1.

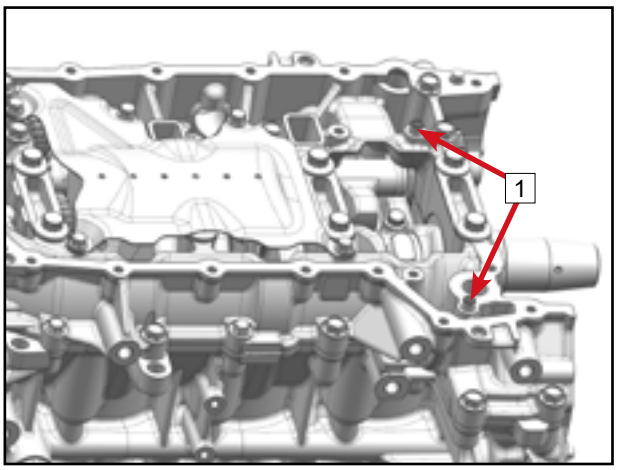

Ensure O-ring 1 is installed.

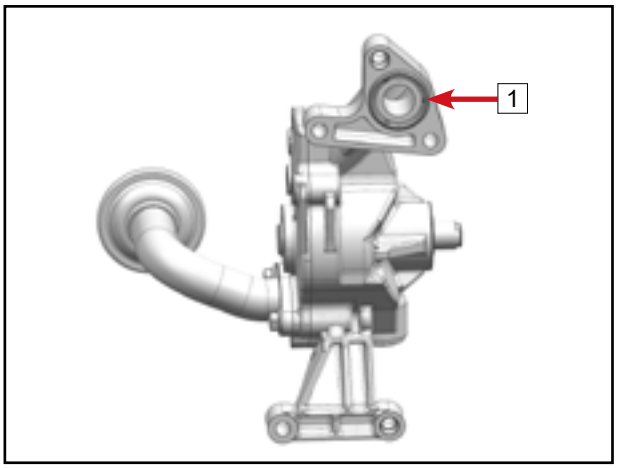

Install oil pump assembly 2 in position. Install bolts 1, and diagonally cross-tighten to the specified torque.

Oil Pump Housing Bolts 1	
Torque	10 N•m (7.3 ft-lb.)

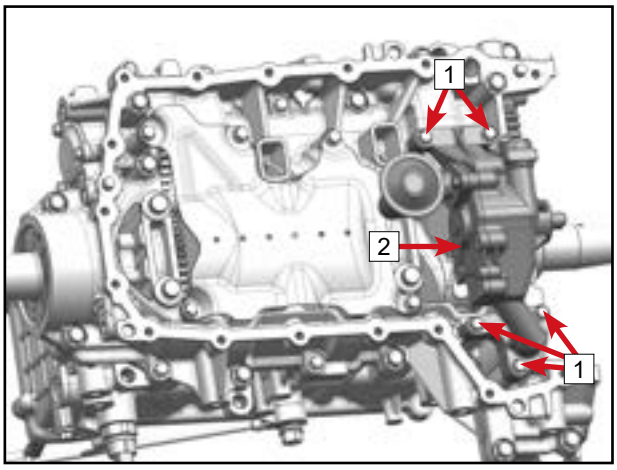

Suspend the oil pump chain 1 on the drive sprocket and driven sprocket of oil pump. Rotate the oil pump shaft, align the driven sprocket hole with the oil pump shaft, and then install the sprocket onto the shaft. Adjust the position of the chain to ensure that the A side of the chain is tight.

NOTE
During the installation of the driven sprocket of the oil pump, do not rotate the crankshaft.

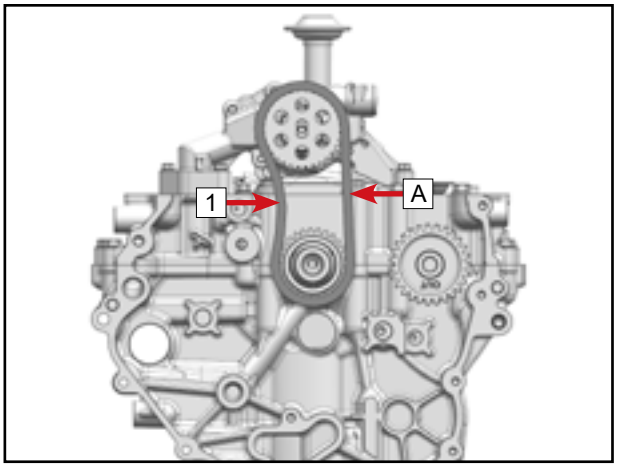

© CFMOTO Powersports, Inc. This manual is subject to all applicable copyright laws. Reproduction or duplication in any form, whole or in part, is strictly prohibited.

Apply 243 thread locker to the bolt 1. Install the bolt 1 (left-hand thread), and tighten it to the specified torque.

Oil Pump Driven Sprocket Bolt 1	
Torque	15 N•m (11.1 ft-lb.)

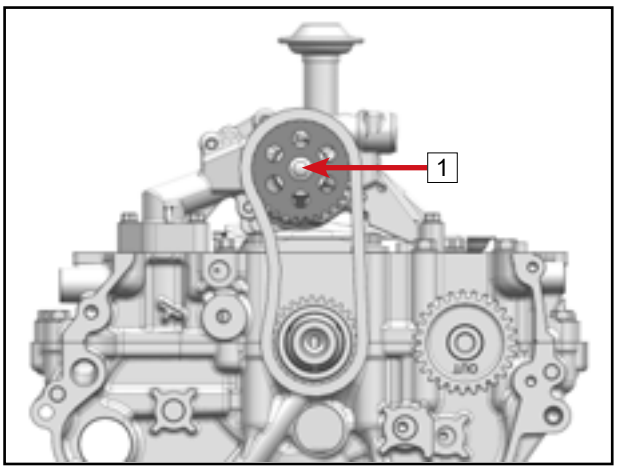

Place the oil pump chain tension plate 2 into position, and ensure that the crankcase wall B blocks the torsion spring A to create tension on the chain.
Apply 243 thread locker to the bolt 1 of the oil pump chain tension plate.
Install the bolt 1, and tighten to the specified torque.

Oil Pump Chain Tension Plate Bolt 1	
Torque	20 N•m (14.7 ft-lb.)

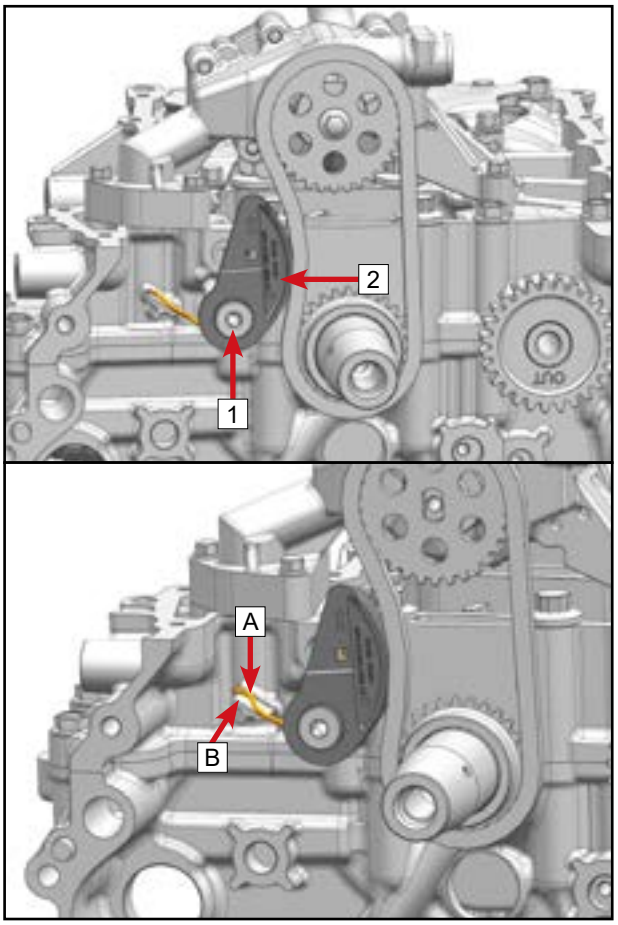

Ensure that the oil pump chain is reliably tensioned.

5.5.5 Oil Pan Installation

Install dowel pins 1.

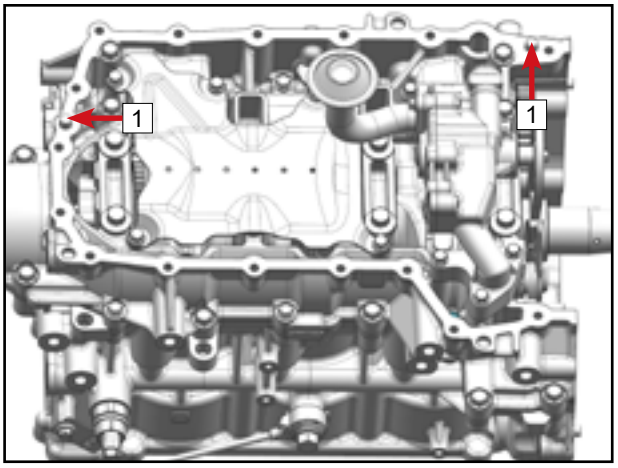

© CFMOTO Powersports, Inc. This manual is subject to all applicable copyright laws. Reproduction or duplication in any form, whole or in part, is strictly prohibited.

Ensure that the sealing surfaces of the lower crankcase and oil pan are clean, dry, and oil-free.

As shown in the image, apply an appropriate amount of 5900 flange sealant [1] to the sealing surface of the oil pan. The coating should be uniform and continuous.

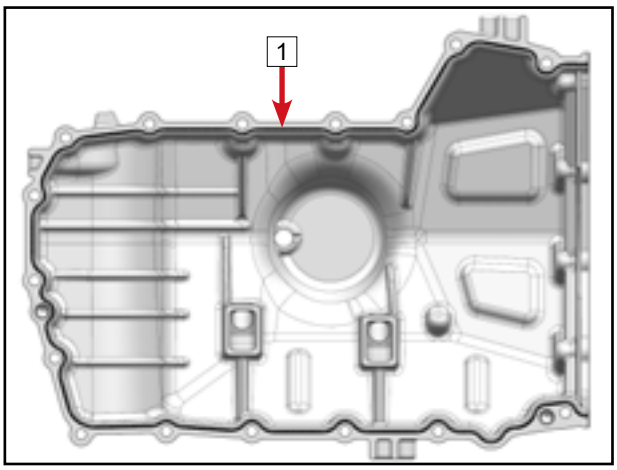

NOTE
From applying the flange sealant to completing the installation of the oil pan and tightening the oil pan bolts, it should be controlled within 10 minutes. It is recommended to keep everything needed close by to save time.

Place oil pan [1] into position.

Install bolts [A].

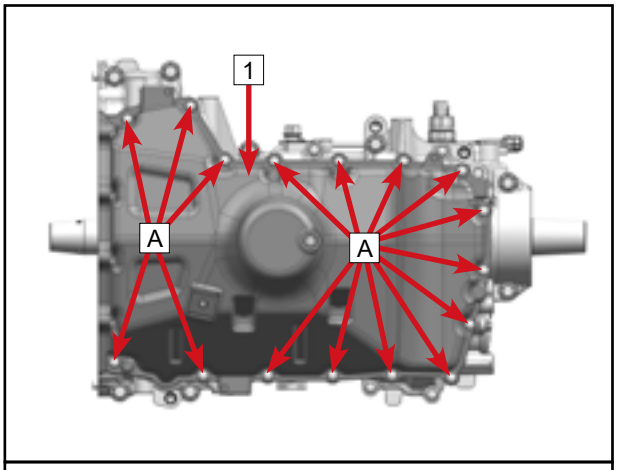

Tighten the oil pan bolts to the specified torque in the sequence shown.

Oil Pan Bolt [A]	
Torque	10 N•m (7.3 ft-lb.)

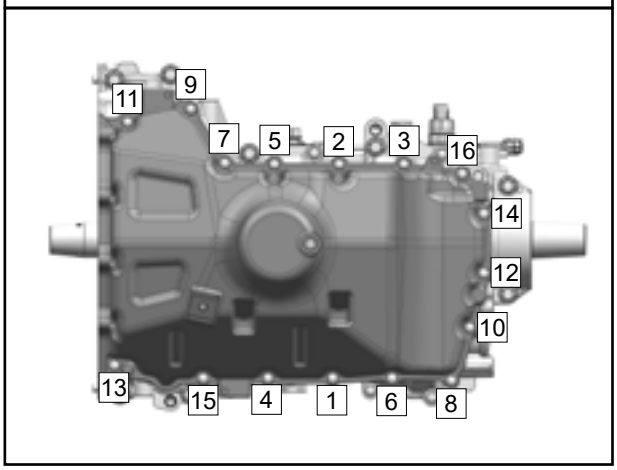

Remove excess flange sealant.

5.5.6 Timing Chain Guide and Tension Plate Installation

Install the tension plate [2].

Apply 243 thread locker to thread pin shaft [1].

Install thread pin shaft [1], tighten to specified torque.

Tension Plate Thread Pin Shaft [1]	
Torque	20 N•m (14.7 ft-lb.)

Make sure the tension plate can rotate freely.

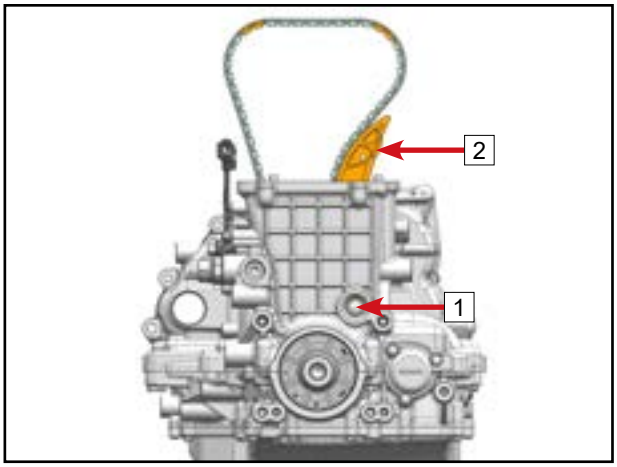

© CFMOTO Powersports, Inc. This manual is subject to all applicable copyright laws. Reproduction or duplication in any form, whole or in part, is strictly prohibited.

Install the O-ring [2] onto the screw plug [1].
Install and tighten the plug [1].

Screw Plug [1]	
Torque	4.5 N•m (3.3 ft-lb.)

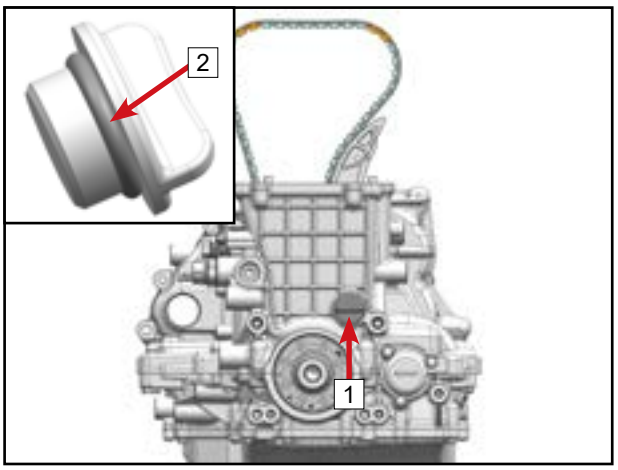

Position the guide [1] from above the cylinder block.
Snap protrusion [A] into the groove [B].

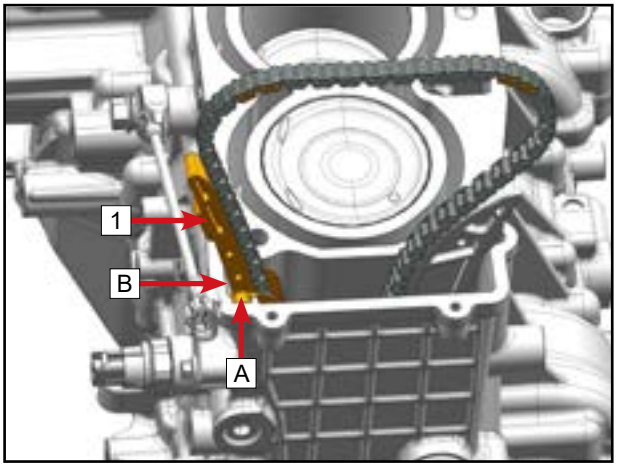

5.5.7 Cylinder Head Assembly Installation

NOTE
Ensure that the piston of cylinder 1 (timing chain side) is at TDC.

Make sure dowel pins [2] are installed.
Install new cylinder head gasket assembly [1].

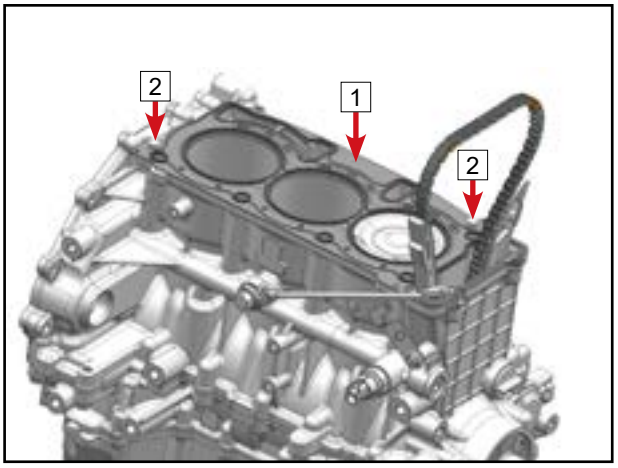

Install the cylinder head assembly.

Install the cylinder head bolts and washers, and tighten them gradually in the order of [1] ~ [8] as shown.

Cylinder Head Bolts M10 [1] ~ [8]		
Step 1	Torque	50 N•m (36.9 ft-lb.)
Step 2	Angle	90°
Step 3	Angle	90°

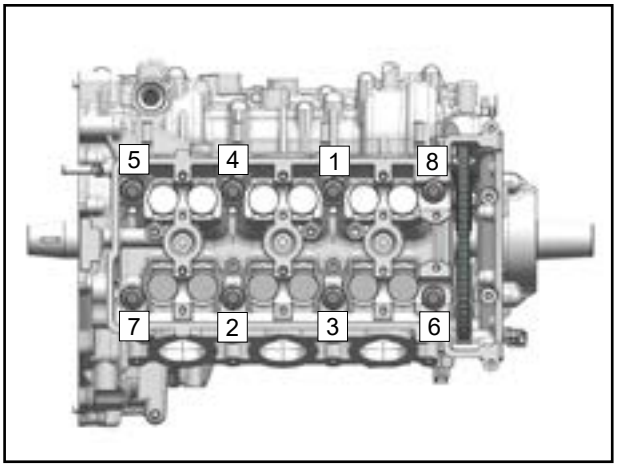

© CFMOTO Powersports, Inc. This manual is subject to all applicable copyright laws. Reproduction or duplication in any form, whole or in part, is strictly prohibited.

Install bolts [1], tighten to specified torque.

Cylinder Head Bolts M6 [1]	
Torque	10 N•m (7.3 ft-lb.)

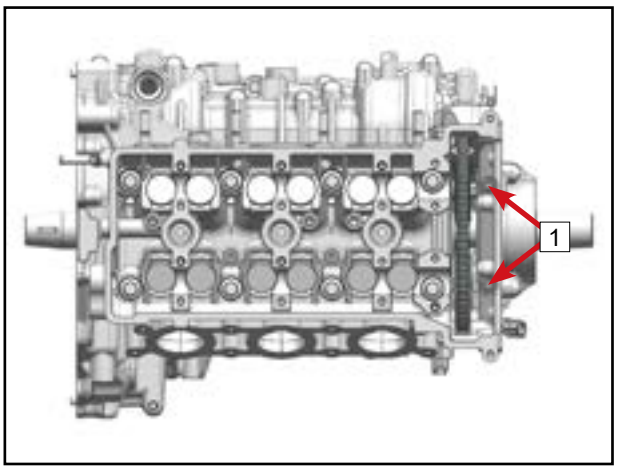

Insert the wire clamp [1] of the coolant temperature sensor into the hole of the cable bracket [2].

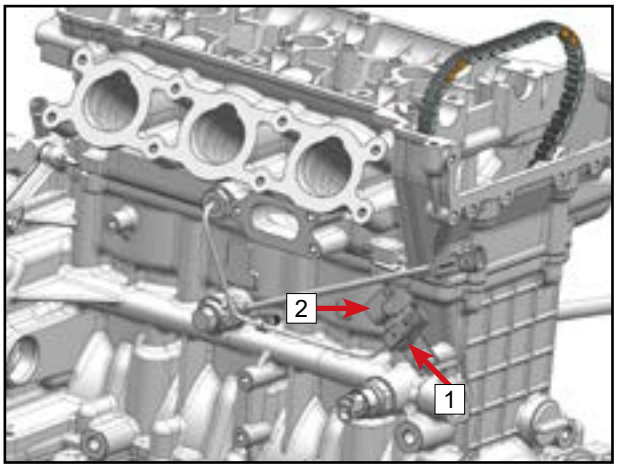

Place front hook [2] in place.
Install screws [1], tighten to specified torque.

Front Hook Screw [1]	
Torque	27 N•m (19.9 ft-lb.)

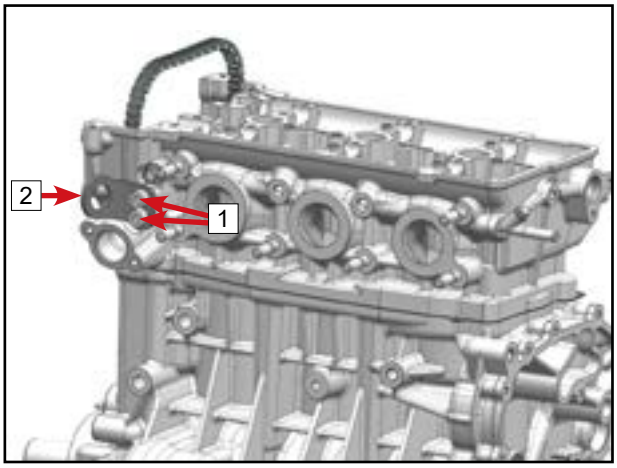

Place rear hook [2] in place.

NOTE
Clamp the rear hook into the slot [A].

Install screw [1], tighten to specified torque.

Rear Hook Screw [1]	
Torque	27 N•m (19.9 ft-lb.)

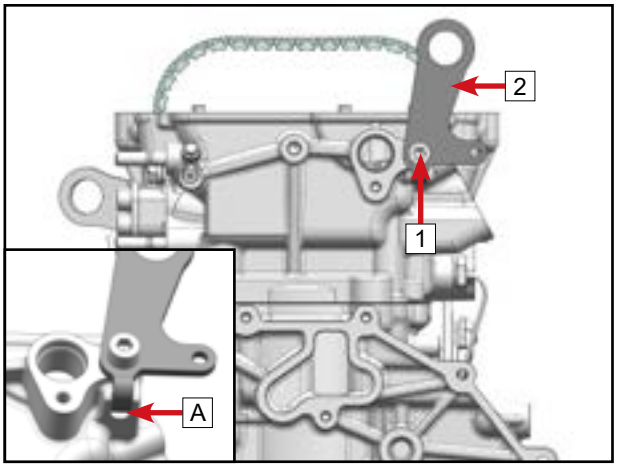

© CFMOTO Powersports, Inc. This manual is subject to all applicable copyright laws. Reproduction or duplication in any form, whole or in part, is strictly prohibited.

5.5.8 Camshaft Installation

NOTE
Make sure the crankshaft is at TDC of cylinder 1 (timing chain side). This procedure assumes the golden chain piece on the crankshaft remains in position at TDC at all times.

Apply oil to the intake camshaft bearing journals.
Pull up the timing chain and install the intake camshaft assembly [1].
Hook the timing chain over the intake camshaft sprocket, and make sure the 'IN' dot mark [A] aligns with the golden chain piece [B] on the chain.

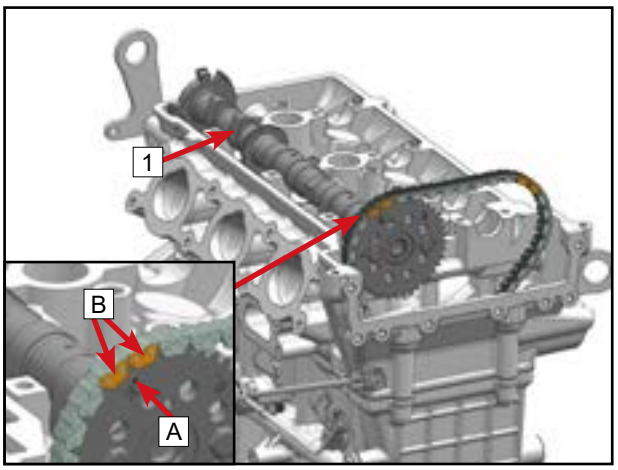

Apply oil to the exhaust camshaft bearing journals.
Install the exhaust camshaft assembly [1].
Hook the timing chain over the sprocket on the exhaust camshaft sprocket, and make sure the 'EX' dot mark [C] on the sprocket aligns with the golden chain piece [D].

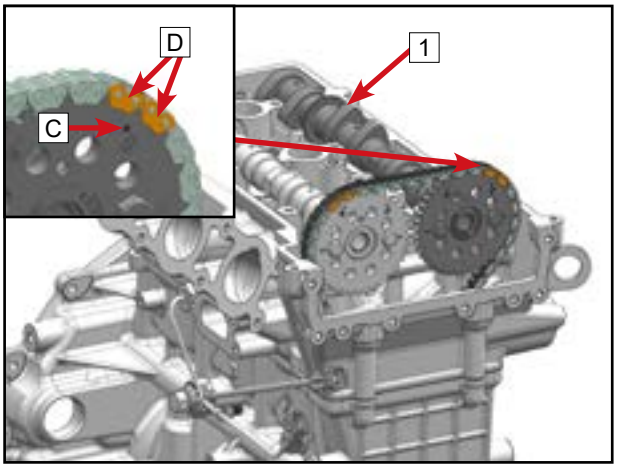

Apply pre-tension to the timing chain at the tensioner hole.
With the crankshaft at TDC of cylinder 1, make sure the position of each timing mark is as shown in the image:

- Dot mark 'IN' [A] on the intake side and dot mark 'EX' [C] on the exhaust side both face upward.
- Line mark [E] on the intake timing sprocket is flush with the cylinder head sealing surface [G] .
- Line mark [F] on the exhaust timing sprocket is flush with the cylinder head sealing surface [G].

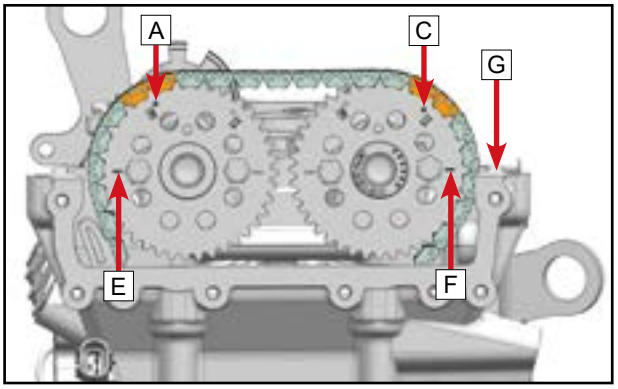

NOTE
Golden chain pieces on the timing chain align with the timing marks on the crankshaft and camshaft sprockets during manufacturing, but are not a requirement for proper timing during overhaul or repair.

© CFMOTO Powersports, Inc. This manual is subject to all applicable copyright laws. Reproduction or duplication in any form, whole or in part, is strictly prohbited.

The "1T" mark on the magneto rotor [H] is aligned with the center of the observation hole [I] . (The crankshaft is located at the TDC of cylinder 1, after the installation of the magneto rotor and the rear end cover of the cylinder block are completed)

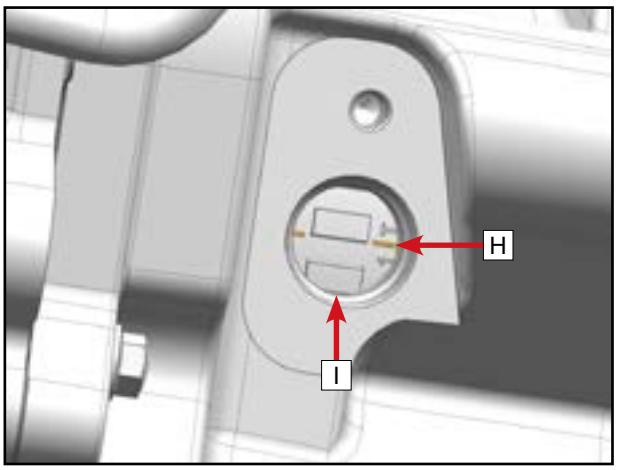

NOTE
Incorrect camshaft timing can cause engine damage or generate a fail code.

Ensure that the dowel pins [1] are not missing.

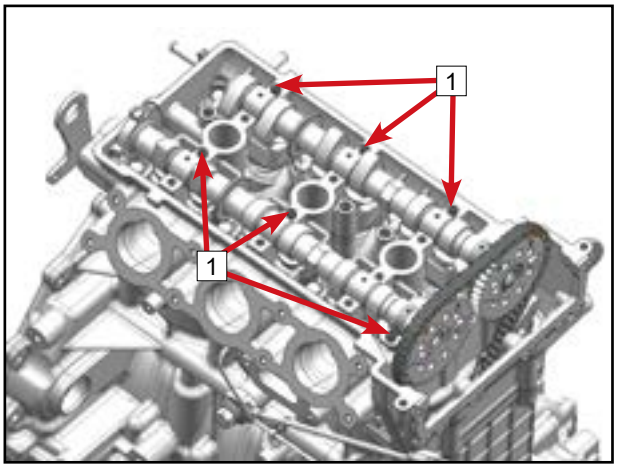

NOTE
The cam bearing covers, cam bearing front cover and cylinder head must be assembled as a complete set with the same pairing marks on them.

Install the intake side cam bearing cover (IN) [1].

Install the exhaust side cam bearing cover (EX) [2].

NOTE
The arrow mark [A] on the cam bearing cover faces the side of the timing chain.

Install the cam bearing front cover [3].

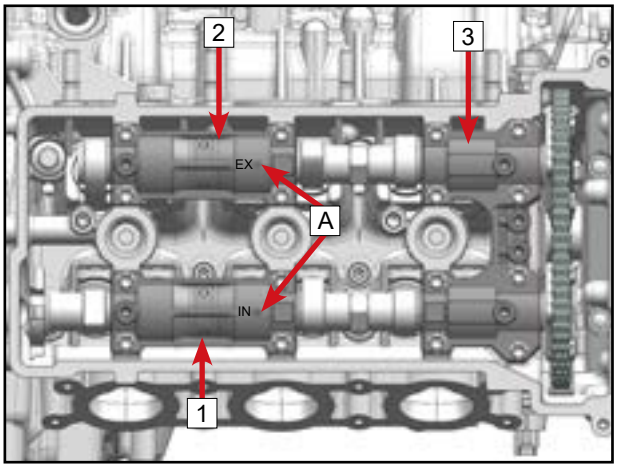

Install the cam bearing cover bolts and tighten them in three steps in the order of [1]~[16].

Cam Bearing Cover Bolts Torque	
Step 1	5 N•m (3.7 ft-lb.)
Step 2	8 N•m (5.9 ft-lb.)
Step 3	12 N•m (8.85 ft-lb.)

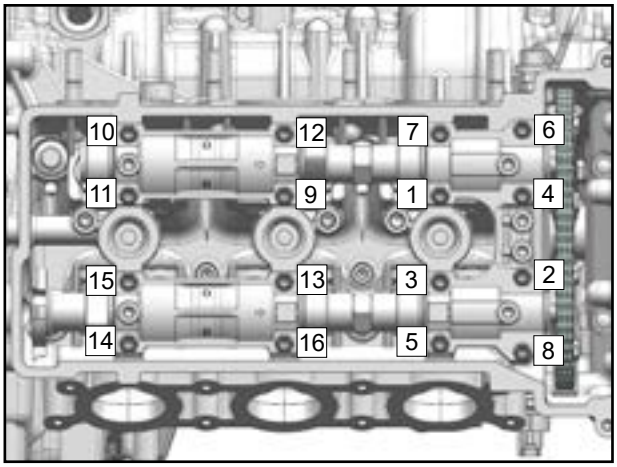

© CFMOTO Powersports, Inc. This manual is subject to all applicable copyright laws. Reproduction or duplication in any form, whole or in part, is strictly prohbited.

Install the chain upper guide assembly 2.
Install bolts 1, tighten to specified torque.

Chain Upper Guide Bolt 1	
Torque	10 N•m (7.3 ft-lb.)

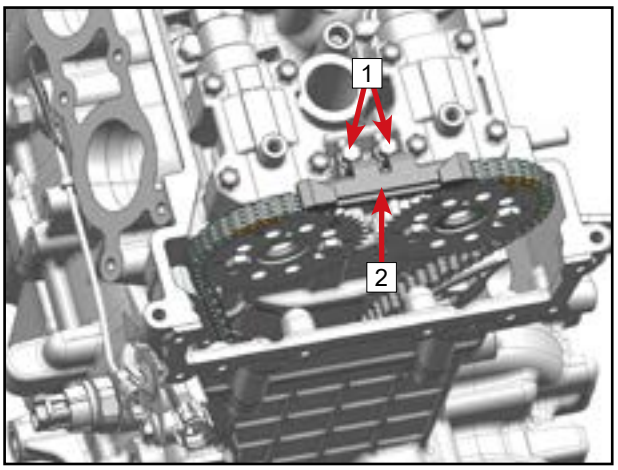

Tensioner Installation:

New Tensioner Installation

Ensure the O-rings 1 and 2 are installed onto the tensioner housing.
Apply a suitable amount of oil to O-ring 1.
Apply a suitable amount of oil to the tensioner plunger 3.

⚠CAUTION

When installing the tensioner, do not point the plunger towards any person to prevent the plunger from flying out and causing injury.

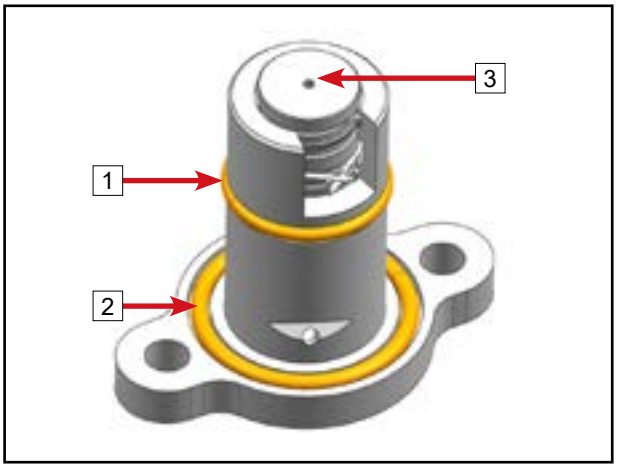

Install tensioner assembly 2.
Install bolts 1, tighten to specified torque.

Tensioner Bolt 1	
Torque	10 N•m (7.3 ft-lb.)

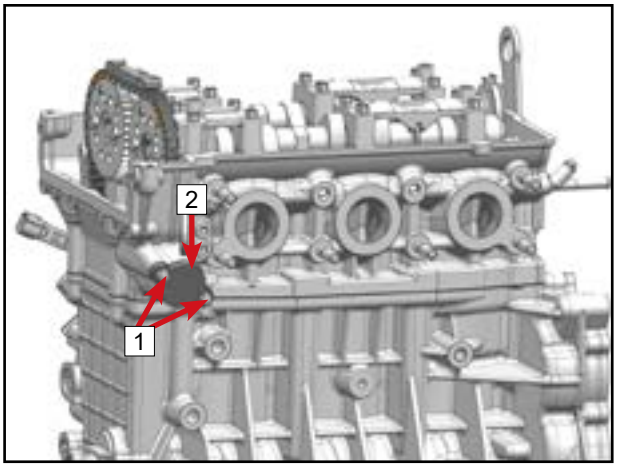

© CFMOTO Powersports, Inc. This manual is subject to all applicable copyright laws. Reproduction or duplication in any form, whole or in part, is strictly prohibited.

Press the tension plate towards tensioner side, so that the tensioner plate presses against the tensioner plunger 1, the C-ring 2 slides into the groove A, and the plunger unlocks and pops out.
Ensure that the timing chain is reliably tensioned.

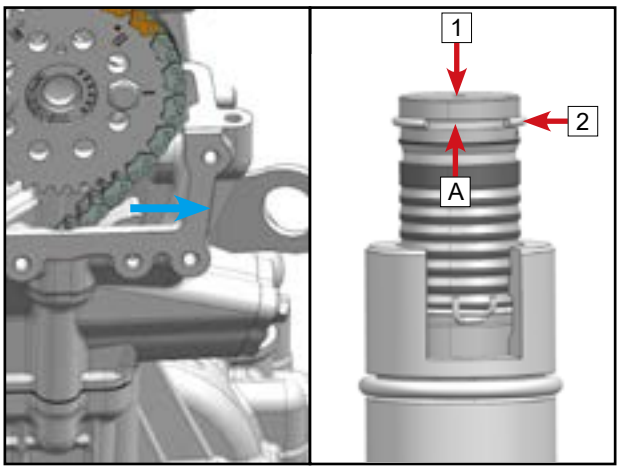

Used Tensioner Installation

NOTE
If reinstalling a used tensioner, the tensioner must be reset to its initial state and then installed according to the new tensioner installation procedure.

The procedure for resetting the tensioner is as follows:
Move the C-ring 1, located in the groove A, into groove B with the gap aligned in the position shown.

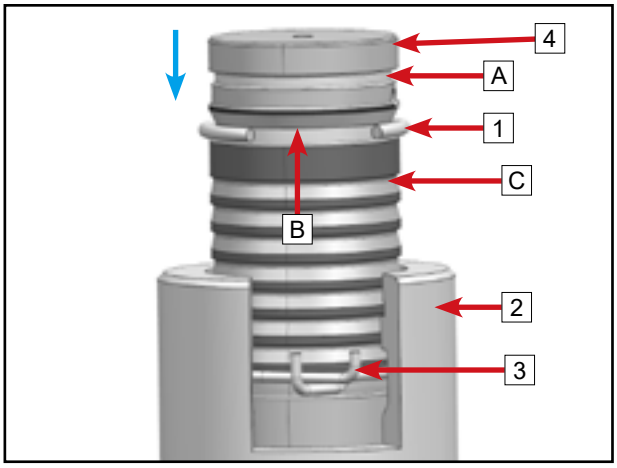

With the housing 2 facing down, place the tensioner plunger on a flat surface.

Squeeze the locking ring 3 using your fingers and press down on the housing until the plunger 4 locks into place.

NOTE
After the plunger is locked, move the locking ring 3 into the slot C, or the plunger will not unlock when installed.

After the tensioner is reset to its initial state, the position of the C-ring 1 and locking ring 3 should be as shown in the image.

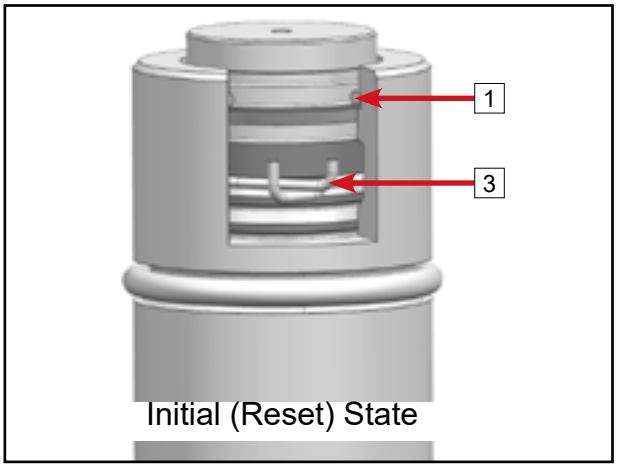

Initial (Reset) State

© CFMOTO Powersports, Inc. This manual is subject to all applicable copyright laws. Reproduction or duplication in any form, whole or in part, is strictly prohibited.

To check and adjust the valve clearance, refer to Cylinder Head Assembling section.

Valve Clearance (Cold Engine)	
IN	0.12 ~ 0.18 mm (0.004 ~ 0.007 in.)
EX	0.32 ~ 0.38 mm (0.012 ~ 0.014 in.)

Apply oil to the O-ring [3] on the camshaft position sensor [2].
Insert the camshaft position sensor [2] into the cylinder head.
Install bolt [1], tighten to specified torque.

Camshaft Position Sensor Bolt [1]	
Torque	10 N•m (7.3 ft-lb.)

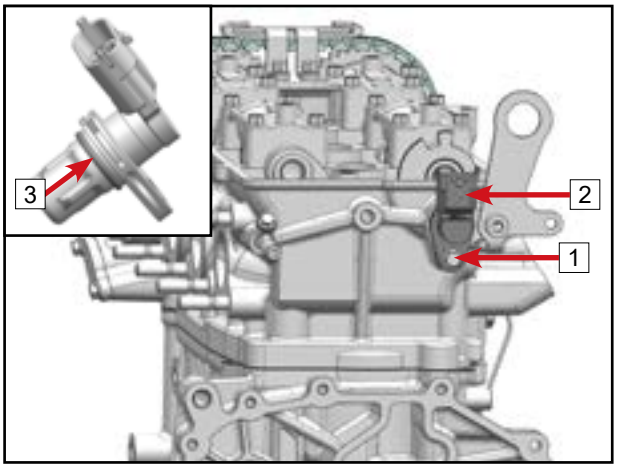

5.5.9 Timing Chamber Cover Installation

Ensure the sealing surfaces of the cylinder head and timing chamber cover are clean, dry and free of oil.
Install the dowel pins [1].

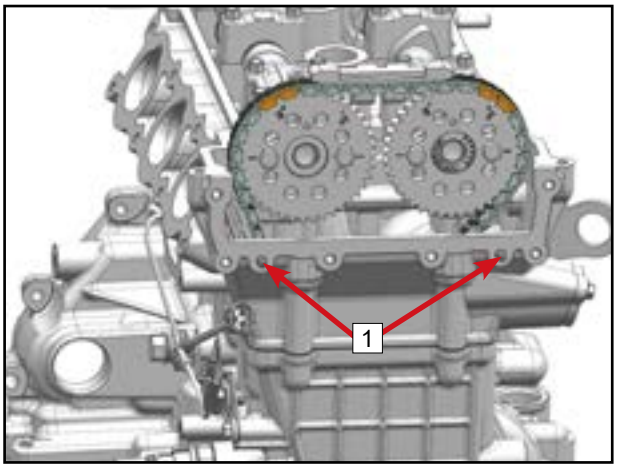

As shown in the image, apply an appropriate amount of 5900 flange sealant [1] to the sealing surface of the timing chamber cover. The coating should be uniform and continuous.

NOTE
From applying the flange sealant to completing the installation of the timing chamber cover and tightening the fixing bolts, it should be controlled within 10 minutes. It is recommended to keep everything needed close by to save time.

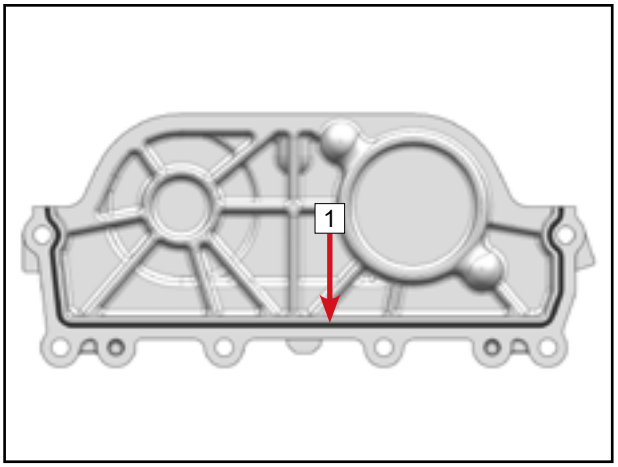

© CFMOTO Powersports, Inc. This manual is subject to all applicable copyright laws. Reproduction or duplication in any form, whole or in part, is strictly prohibited.

Install timing chamber cover [3], clip [2] and bolts [1].
Tighten bolts [1] to the specified torque.

Timing Chamber Cover Bolt [1]	
Torque	10 N•m (7.3 ft-lb.)

Remove spilled flange sealant.

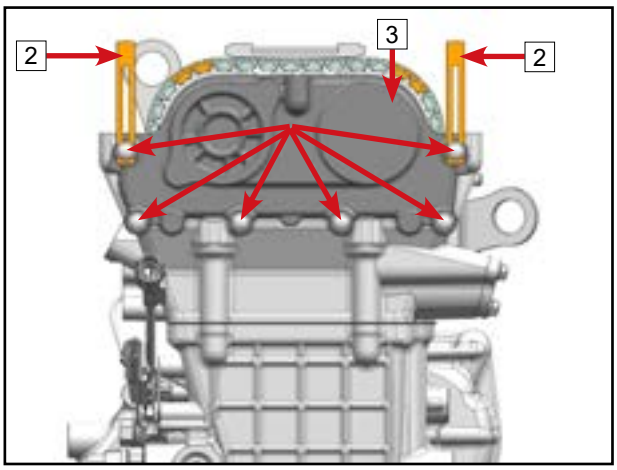

5.5.10 Cylinder Head Cover Assembly Installation

Evenly apply a suitable amount of 5900 flange sealant to the joints [1].

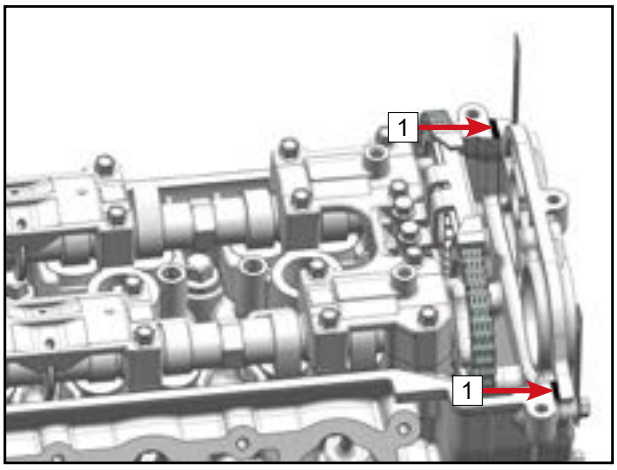

Install the cylinder head cover [1] and cylinder head cover seal ring.
Install cylinder head cover bolts [2] and seal rings [3], then diagonally cross-tighten to the specified torque.

Cylinder Head Cover Bolts [2]	
Torque	10 N•m (7.3 ft-lb.)

Install bolt [4] and washers [5], then tighten to the specified torque.

Bolt [4]	
Torque	10 N•m (7.3 ft-lb.)

Install bolts [6], then tighten to the specified torque.

Bolt [6]	
Torque	10 N•m (7.3 ft-lb.)

Pay attention to the installation direction [A] of the cylinder head cover bolt seal rings [3].

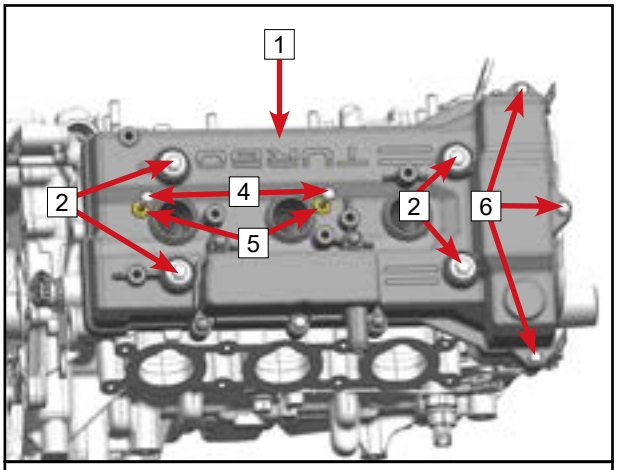

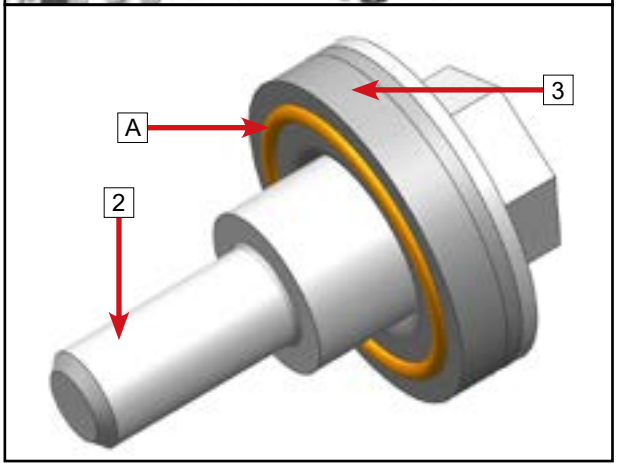

© CFMOTO Powersports, Inc. This manual is subject to all applicable copyright laws. Reproduction or duplication in any form, whole or in part, is strictly prohibited.

Place cable brackets [2] in place.

NOTE
The installation method of the two cable brackets are the same. Faces [A] and [B] are basically parallel to each other.

Install bolts [1], tighten to specified torque.

Cable Bracket Bolt [1]	
Torque	10 N•m (7.3 ft-lb.)

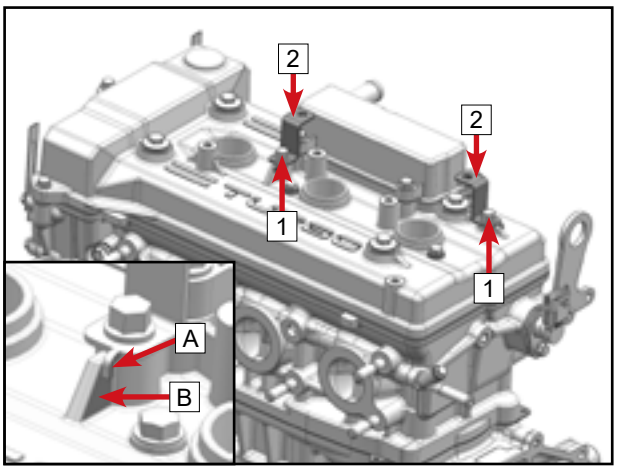

5.5.11 Spark Plug and Ignition Coil Installation

Install spark plugs [1], then tighten to the specified torque.

Spark Plug [1]	
Torque	14 N•m (10.3 ft-lb.)

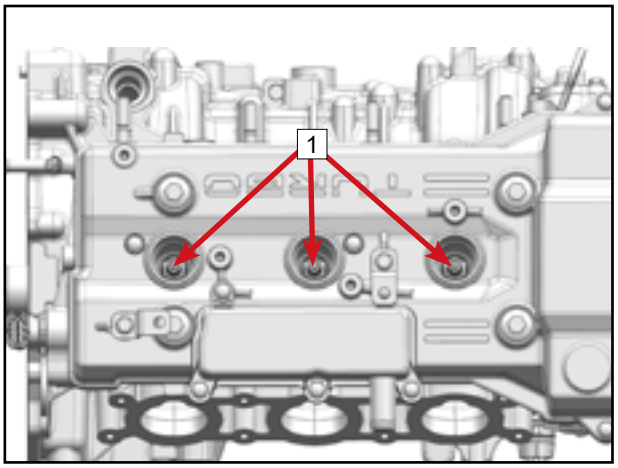

Install ignition coils [2].
Install bolts [1], then tighten to the specified torque.

Ignition Coil Bolt [1]	
Torque	10 N•m (7.3 ft-lb.)

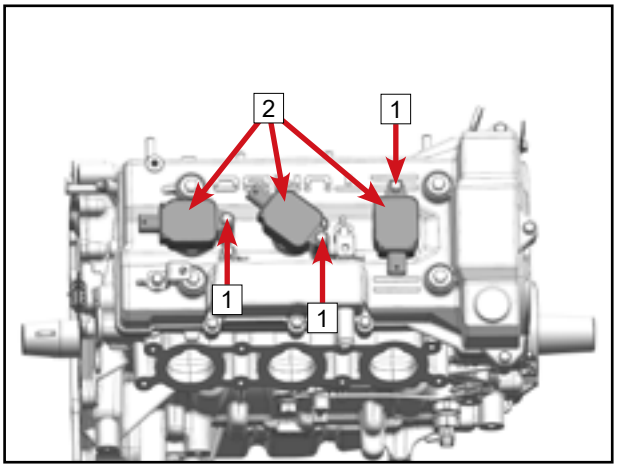

5.5.12 Idle Gear Installation

Apply oil to water pump idle gear sleeve [2].
Install water pump idle gear sleeve [2] and water pump idle gear [3] (the "OUT" mark [A] faces outward).
Apply 243 thread locker to bolt [1].
Install bolt [1], tighten to specified torque.

Water Pump Idle Gear Sleeve Bolt [1]	
Torque	12 N•m (8.8 ft-lb.)

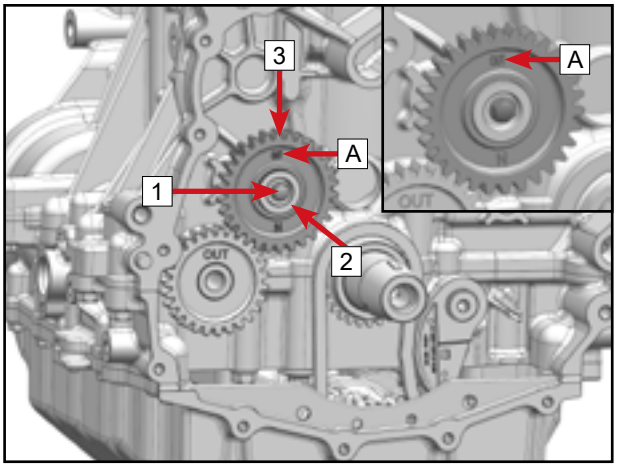

© CFMOTO Powersports, Inc. This manual is subject to all applicable copyright laws. Reproduction or duplication in any form, whole or in part, is strictly prohibited.

5.5.13 Starter Dual Gear Installation

Apply oil to dual gear shaft [2].
Install dual gear shaft [2].
Install starter dual gear [1].

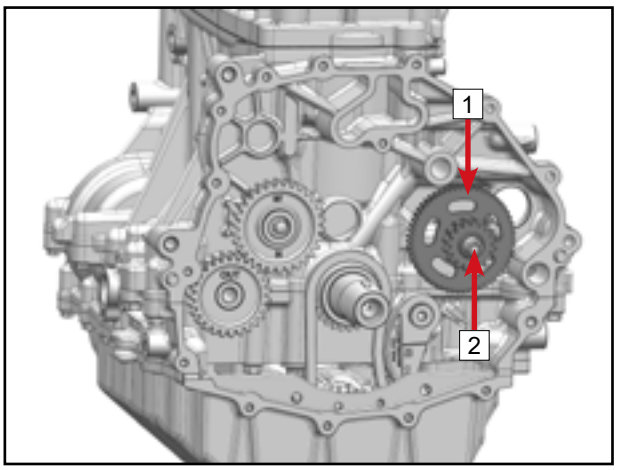

5.5.14 Magneto Rotor Installation

Make sure the crankshaft is fitted with the woodruff key [1].
Ensure the tapered surface [2] of the crankshaft is clean.
Apply a suitable amount of oil to the mating surface [3] of the crankshaft.

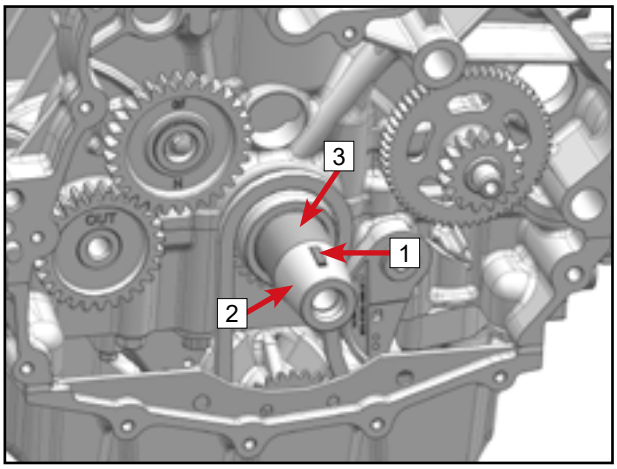

Ensure the taper [1] of the magneto rotor is clean.
Apply a suitable amount of oil to the overriding clutch [2].

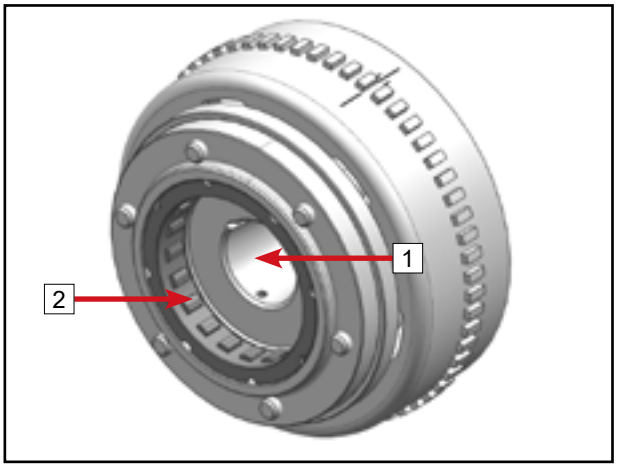

Apply suitable amount of oil to the mating surface [1] of the starter driven gear and the inner ring [2] of the needle roller bearing.

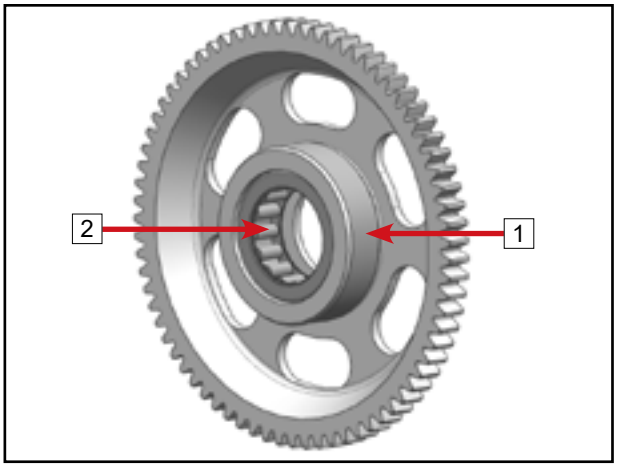

© CFMOTO Powersports, Inc. This manual is subject to all applicable copyright laws. Reproduction or duplication in any form, whole or in part, is strictly prohibited.

Install the starter driven gear [1] on the magneto rotor [2] by rotating it clockwise while pushing in.

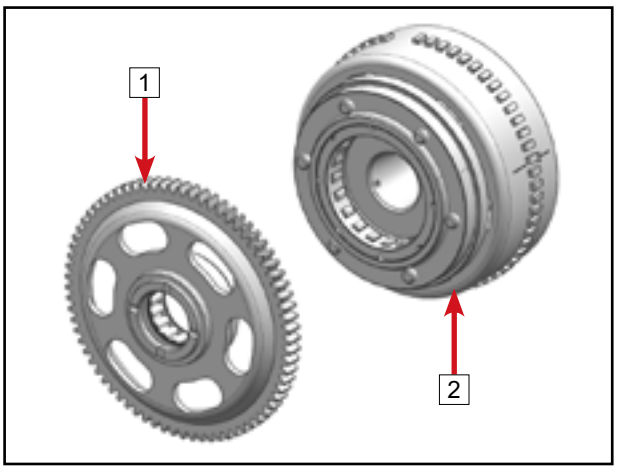

Align the keyway [1] on the magneto rotor with the woodruff key on the crankshaft, then install the magneto rotor assembly [2] on the crankshaft.

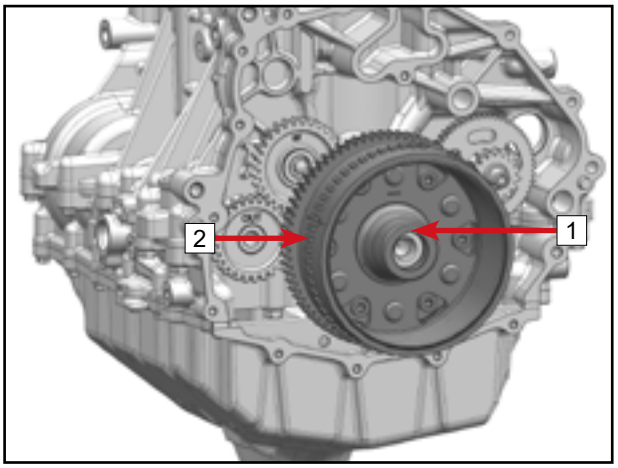

Apply 243 thread locker to the magneto bolt [1], then install the magneto bolt [1]. Use magneto rotor stopper [2] to secure the magneto rotor.

Magneto Rotor Stopper
(See section 5.1 for details.)

Tighten the magneto bolt [1] to the specified torque.

Magneto Bolt [1]	
Torque	130 N•m (95.8 ft-lb.)

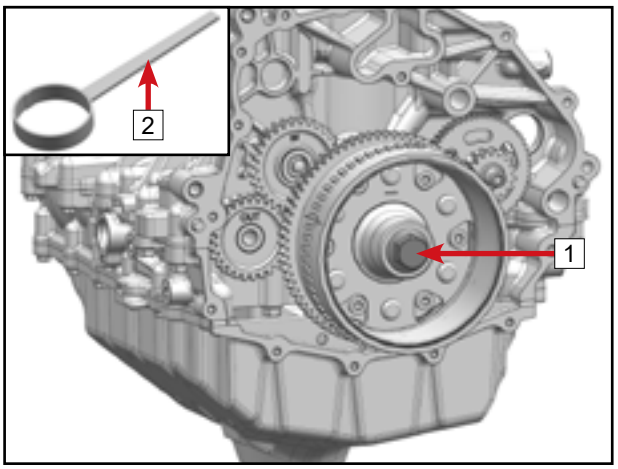

© CFMOTO Powersports, Inc. This manual is subject to all applicable copyright laws. Reproduction or duplication in any form, whole or in part, is strictly prohibited.

5.5.15 Magneto End Cover Installation

Ensure the sealing surfaces of the crankcase and cylinder body rear end cover are clean, dry and free of oil.

Apply an suitable amount of 5900 flange sealant to the seams 1.

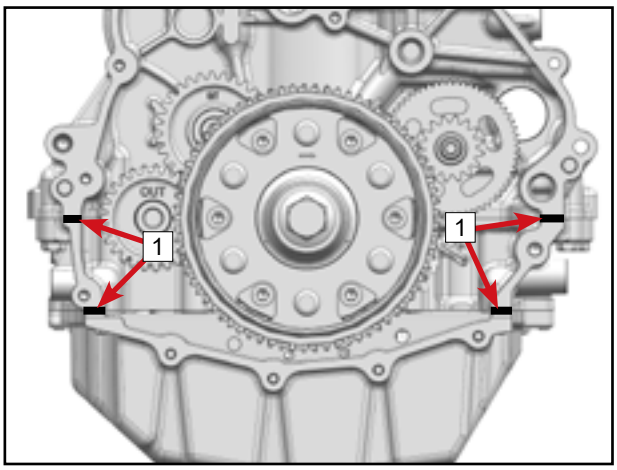

Ensure the dowel pins 2 are installed.

Install a new magneto end cover gasket 1 .

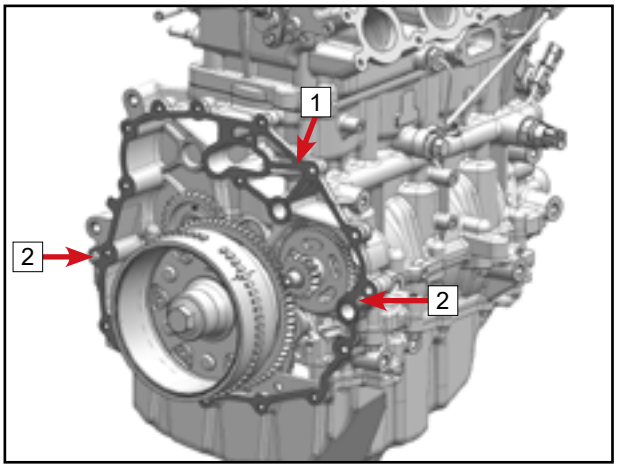

Apply an suitable amount of 5900 flange sealant to the rubber sealing sleeve 1 on the magneto stator cable and install it into the magneto end cover.

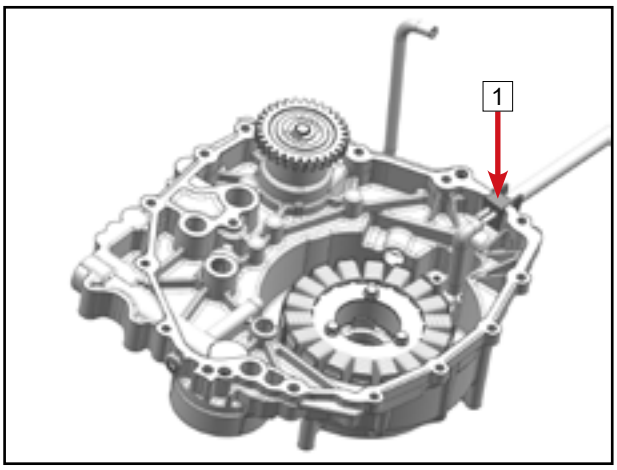

© CFMOTO Powersports, Inc. This manual is subject to all applicable copyright laws. Reproduction or duplication in any form, whole or in part, is strictly prohbited.

Carefully install the magneto end cover assembly onto the crankcase.

⚠CAUTION
The magnetic force of the magneto rotor and the stator is very strong. Do not place your fingers between the magneto end cover and the crankcase to avoid injury.

Install the oil cooler outlet hose bracket [A] in place.

Install the magneto end cover bolts, pretighten them in [1]~[16] sequence, then tighten them to the specified torque.
Bolt [1]~[14]: M6×25
Bolt [15] [16]: M8×40

Cylinder Body Rear End Cover Bolt M6	
Torque	10 N•m (7.3 ft-lb.)
Cylinder Body Rear End Cover Bolt M8	
Torque	27 N•m (19.9 ft-lb.)

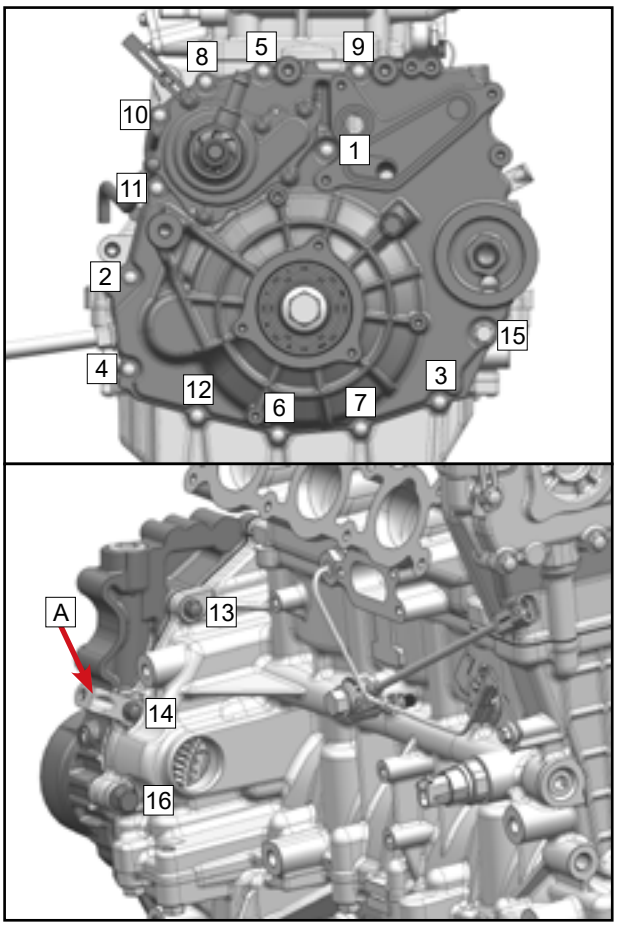

Coat the O-ring [3] on the RPM sensor [2] with engine oil.
Insert the RPM sensor [2] into the magneto end cover.
Install bolt [1], the tighten to the specified torque.

RPM Sensor Bolt [1]	
Torque	10 N•m (7.3 ft-lb.)

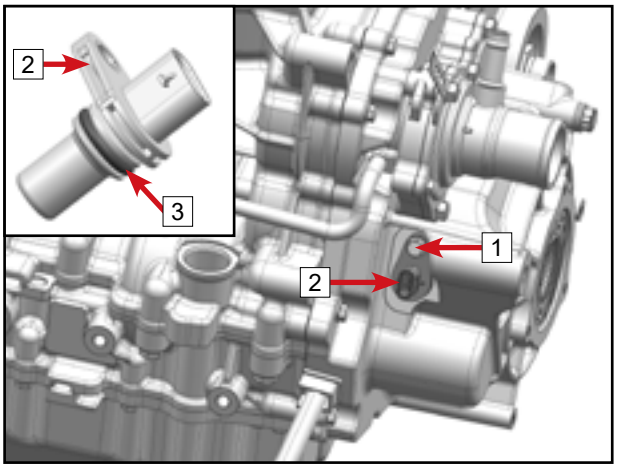

Make sure that the sealing ring [3] of the magneto plug cover has been installed on the magneto end cover [2].
Place the magneto plug cover [2] into position.
Install the bolts [1] and tighten to the specified torque.

Magneto Plug Cover Bolts	
Torque	10 N•m (7.3 ft-lb.)

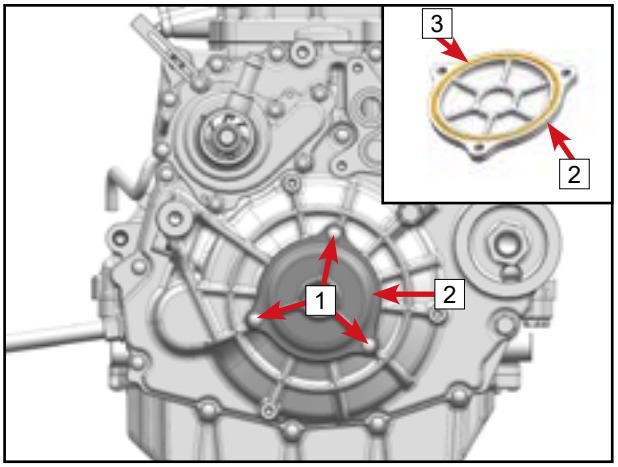

© CFMOTO Powersports, Inc. This manual is subject to all applicable copyright laws. Reproduction or duplication in any form, whole or in part, is strictly prohibited.

5.5.16 Starter Motor Installation

Oil O-ring and gear of the starter motor assembly [2].

Install the starter motor assembly [2].

Install bolts [1], then tighten to the specified torque.

Starter Motor Bolt [1]	
Torque	10 N•m (7.3 ft-lb.)

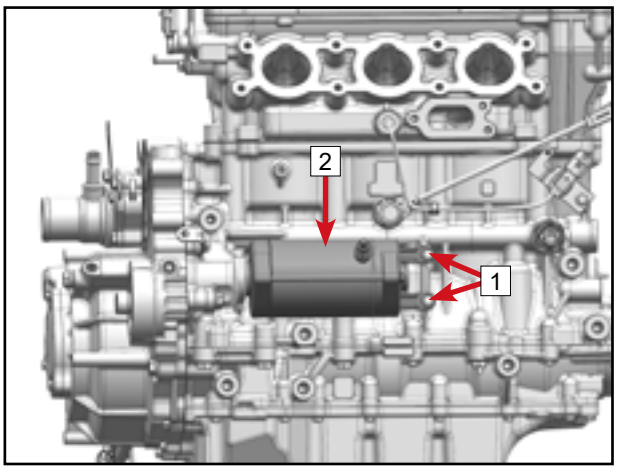

5.5.17 Oil Cooler Installation

Install the oil cooler seal ring [1] and O-ring [2].

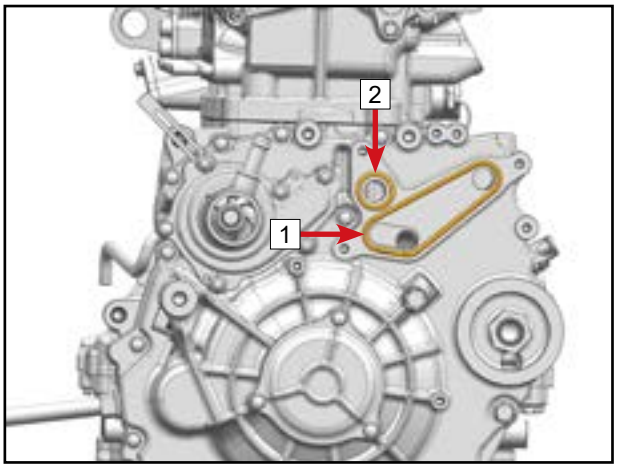

Install oil cooler assembly [2].

Install bolts [1], then tighten to the specified torque.

Oil Cooler Bolt [1]	
Torque	10 N•m (7.3 ft-lb.)

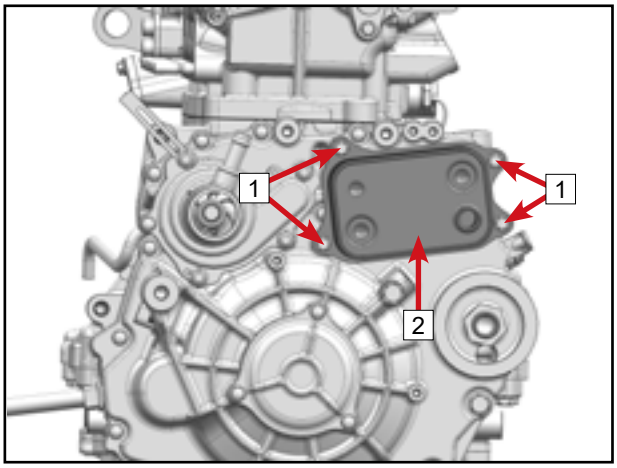

5.5.18 Oil Filter Installation

Install oil filter assembly [1], then tighten to the specified torque.

Oil Filter Assembly [1]	
Torque	17 N•m (12.5 ft-lb.)

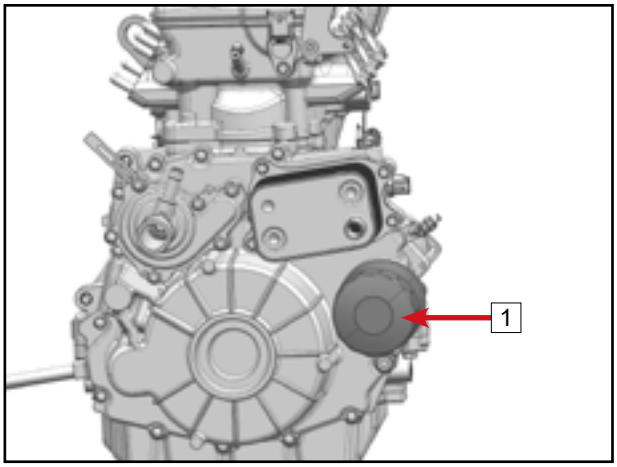

© CFMOTO Powersports, Inc. This manual is subject to all applicable copyright laws. Reproduction or duplication in any form, whole or in part, is strictly prohbited.

5.5.19 Thermostat Housing Installation

Install the thermostat housing assembly [2]. Install bolts [1], then tighten to the specified torque.

Thermostat Housing Bolts [1]	
Torque	10 N•m (7.3 ft-lb.)

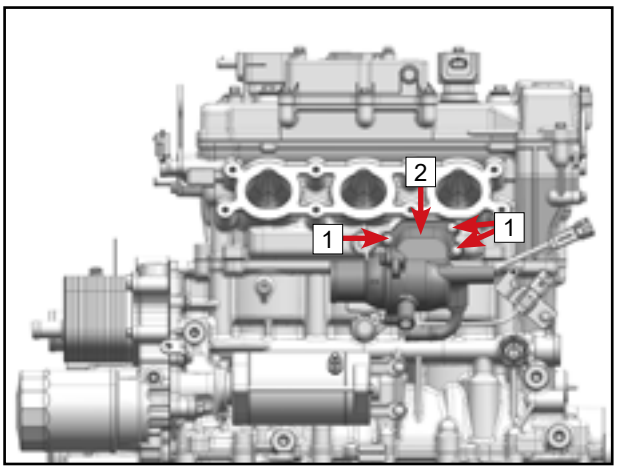

5.5.20 Circulation Return Pipe Installation

Place the circulation return pipe assembly [4] into position.

Install the bolt [3], but do not tighten it.

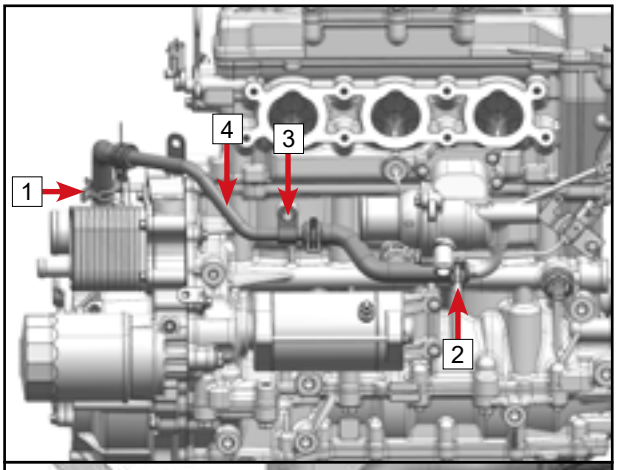

Loosen the clamp [1], install the return pipe [4] to the water pump, aligning mark [A] with mark [B], then install the clamp.

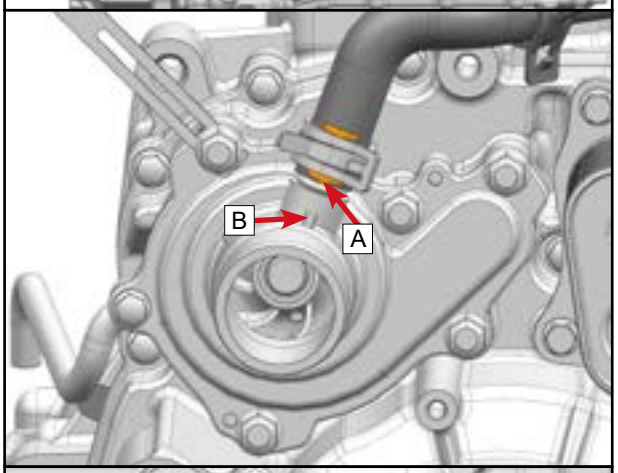

Loosen the clamp [2], install the circulation return pipe [4] on the thermostat housing, aligning mark [C] with mark [D], then install the clamp.

Tighten bolt [3] to specification and secure the circulation return pipe [4] to the cylinder body.

Circulation Return Pipe Bolt [3]	
Torque	10 N•m (7.3 ft-lb.)

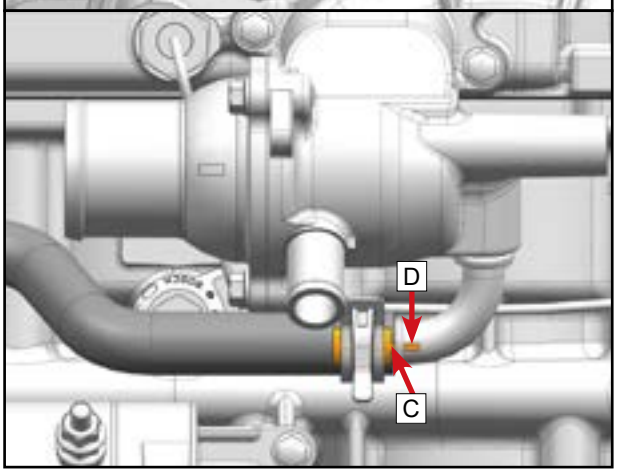

© CFMOTO Powersports, Inc. This manual is subject to all applicable copyright laws. Reproduction or duplication in any form, whole or in part, is strictly prohibited.

5.5.21 Thermostat Outlet Pipe Installation

Place the thermostat outlet pipe assembly into position.

Install and tighten the bolts [1] to sescure the thermostat outlet pipe assembly [2] to the magneto end cover.

Thermostat Outlet Pipe Bolts [1]	
Torque	10 N•m (7.3 ft-lb.)

Loosen the clamp [3], install the thermostat outlet hose [4] onto the thermostat housing, and align mark [A] with mark [B], then install the clamp.

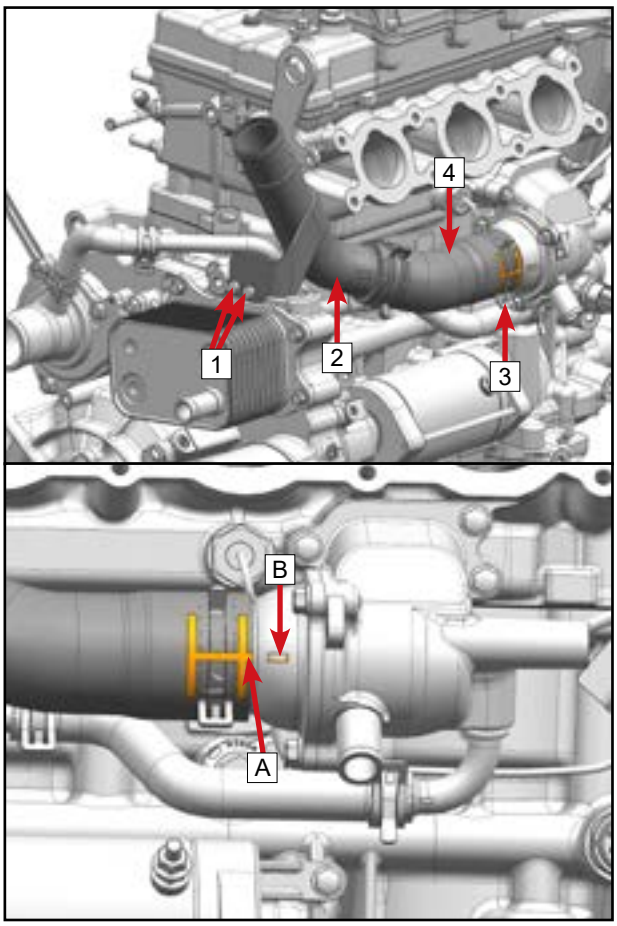

© CFMOTO Powersports, Inc. This manual is subject to all applicable copyright laws. Reproduction or duplication in any form, whole or in part, is strictly prohbited.

5.5.22 Oil Cooler Outlet Tube Installation

Place the oil cooler outlet tube [3] into postion.

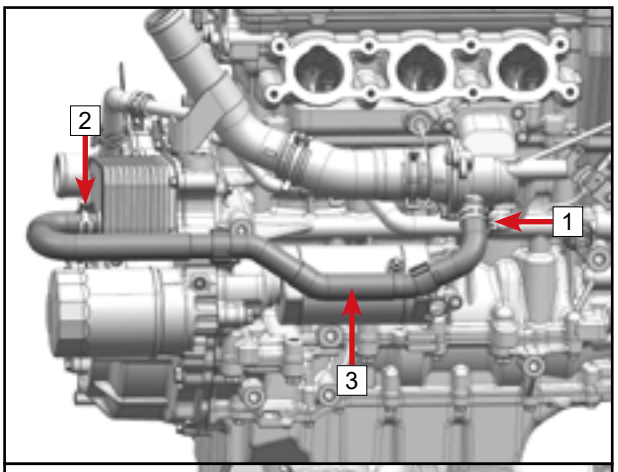

Loosen the clamp [1], install the oil cooler outlet tube [3] on the thermostat hosuing connector, aligning mark [A] with mark [B], then install the clamp.

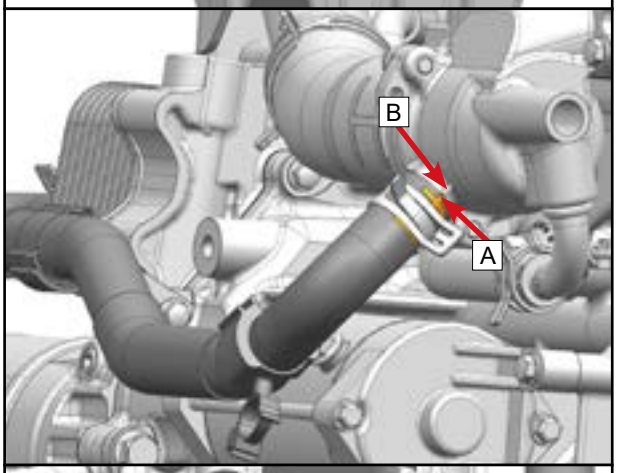

Loosen clamp [2] and install the oil cooler outlet tube [3] on the oil cooler connector, aligning mark [C] with mark [D], then install the clamp.

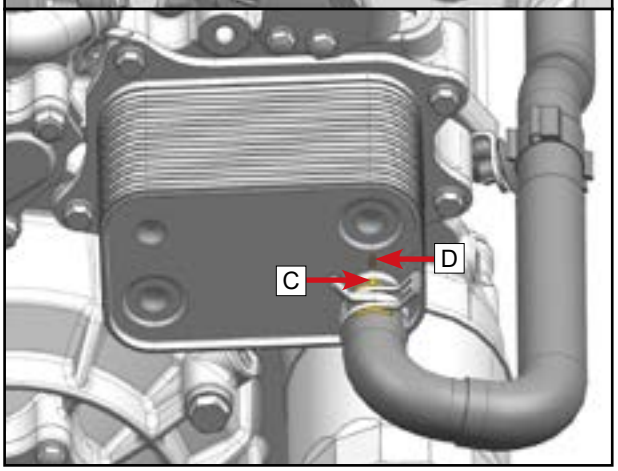

Insert the retainer clamp [1] into the hole in the oil cooler outlet hose bracket [2].

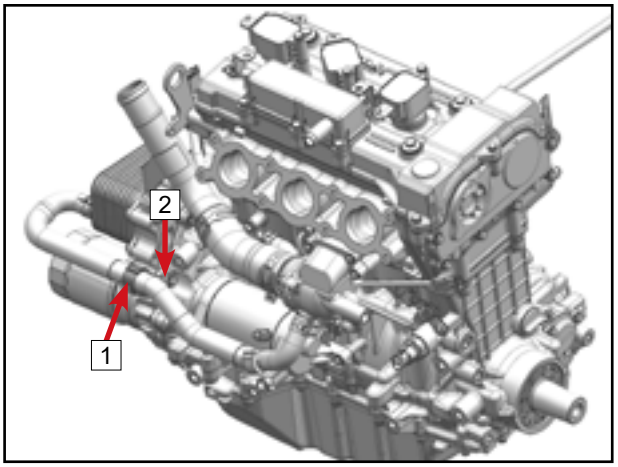

© CFMOTO Powersports, Inc. This manual is subject to all applicable copyright laws. Reproduction or duplication in any form, whole or in part, is strictly prohibited.

5.5.23 Turbocharger Installation

Install a new heat insulation plate integrated turbocharger gasket 1.

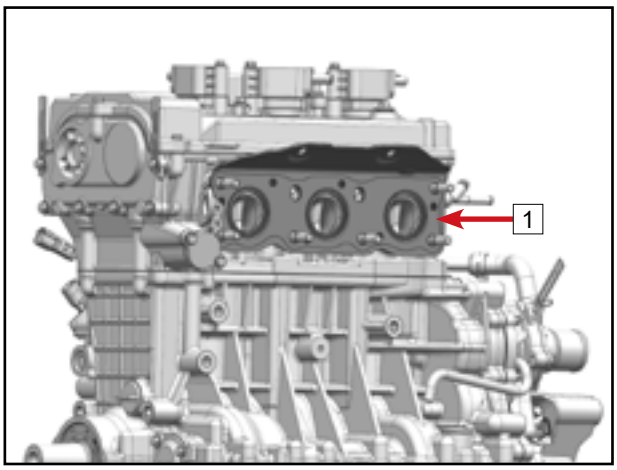

Place the turbocharger 3 into position.
Install bolts M8×45 2 and washers.
Install the stop nuts M8 1 and washers.

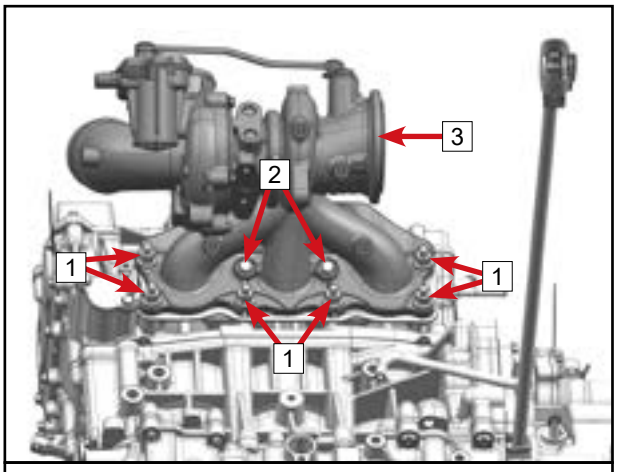

Tighten the nuts 1 and bolts 2 step by step in the order of A ~ G to the specified torque.

Torque of Turbocharger Nuts 1 and Bolts 2	
Step 1	16 N•m (11.8 ft-lb.)
Step 2	35 N•m (25.8 ft-lb.)
Step 3	35 N•m (25.8 ft-lb.)

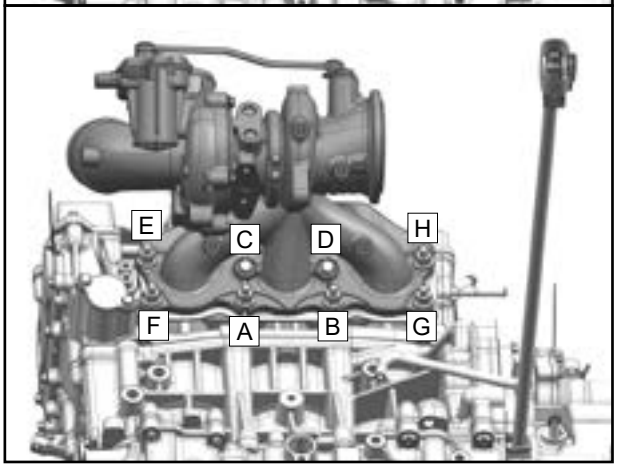

NOTE: Step 3 is to verify the torque implemented in Step 2.

Place the lower turbocharger heat shield 2 into position.
Install bolts 1 and tighten to specified torque.

Turbocharger Heat Shield Bolt 1	
Torque	10 N•m (7.3 ft-lb.)

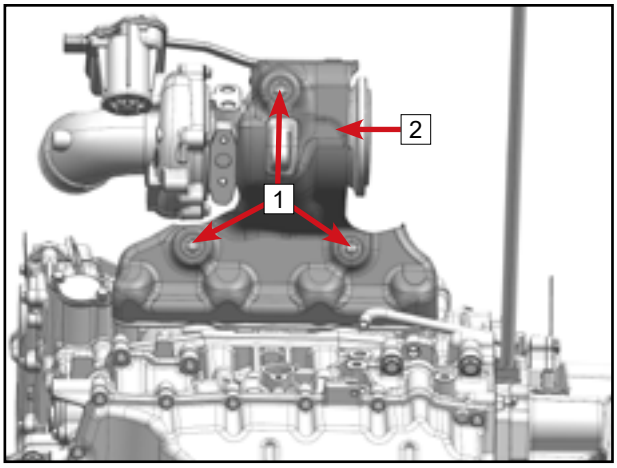

© CFMOTO Powersports, Inc. This manual is subject to all applicable copyright laws. Reproduction or duplication in any form, whole or in part, is strictly prohibited.

Place the upper turbocharger heat shield [2] into position.
Install the bolts [1] and washers, and tighten them to the specified torque.

Turbocharger Heat Shield Bolt [1]	
Torque	10 N•m (7.3 ft-lb.)

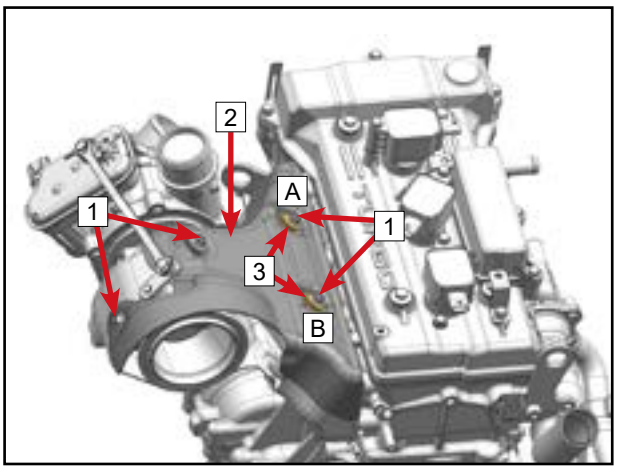

NOTE

There is a washer [3] at each of the bolts [1] at positions [A] and [B]. Do not omit them during reassembly.

Ensure that the O-ring [1] on the turbocharger return pipe is not hardened or otherwise damaged.
Oil the O-ring [1].

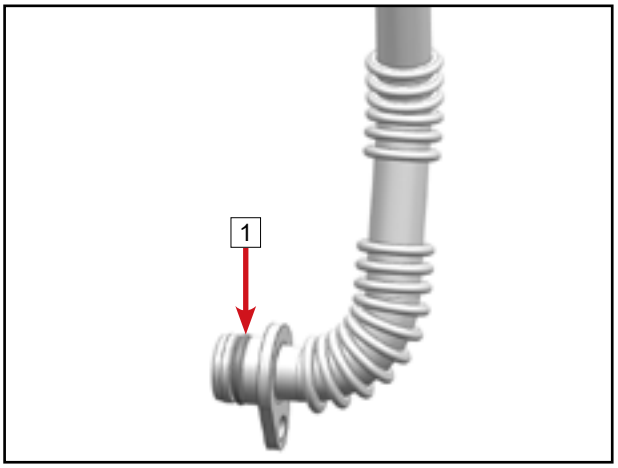

Install the turbocharger return pipe [2] with a new turbocharger return pipe gasket [3].

NOTE

If improper disassembly caused significant deformation of the turbocharger return pipe, replace it with a new return pipe assembly.

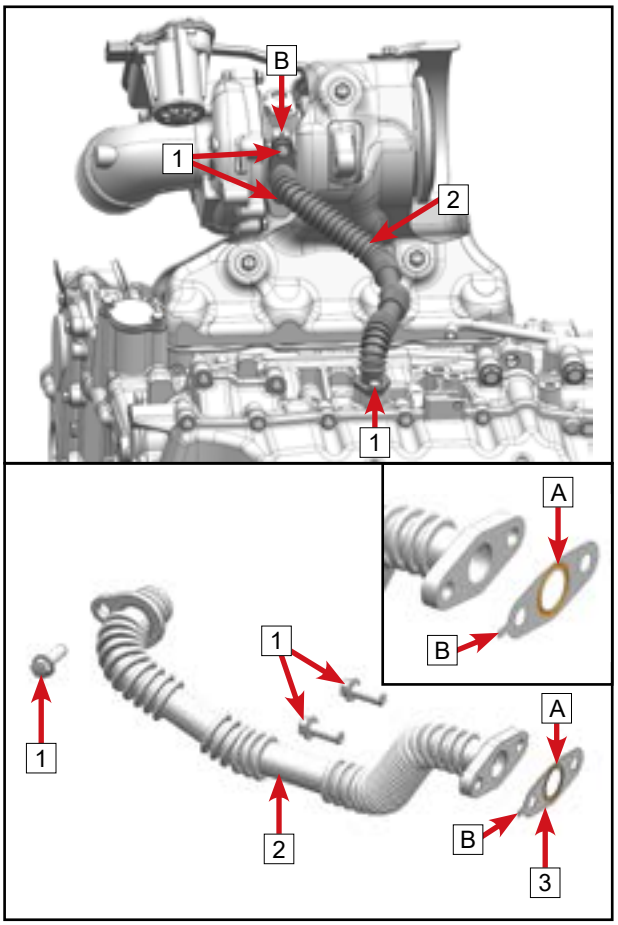

The concave part [A] of the gasket [3] faces the turbocharger, while the protrusion [B] faces as shown in the image.

Install bolts [1] and tighten to specified torque.

Turbocharger Return Pipe Bolt [1]	
Torque	10 N•m (7.3 ft-lb.)

© CFMOTO Powersports, Inc. This manual is subject to all applicable copyright laws. Reproduction or duplication in any form, whole or in part, is strictly prohibited.

Place the turbocharger water inlet pipe assembly [5] into position.

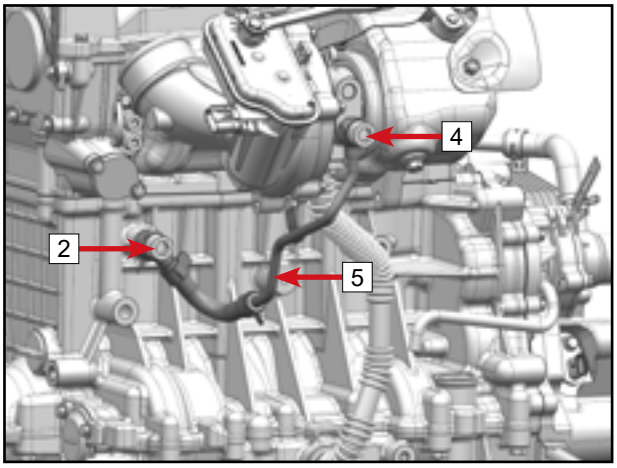

Install turbocharger water inlet bolt [4] and inlet gaskets [3] as shown.

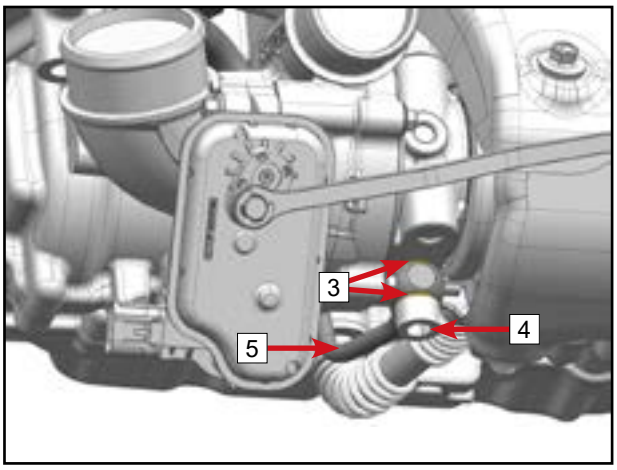

Install turbocharger water inlet bolt [2] and inlet gaskets [3] as shown.

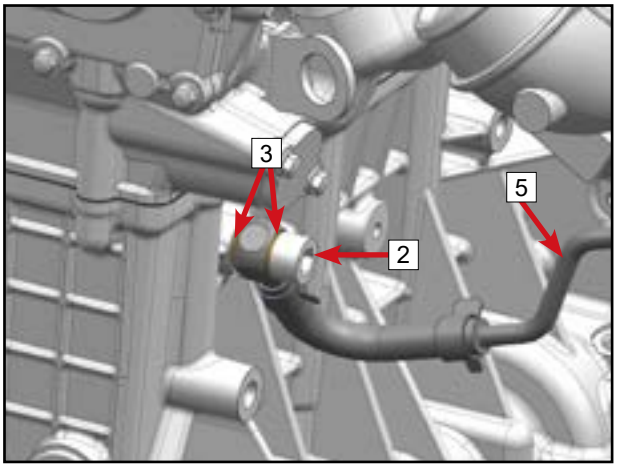

Install the bracket bolt [1], and connect the water inlet pipe to the turbocharger.

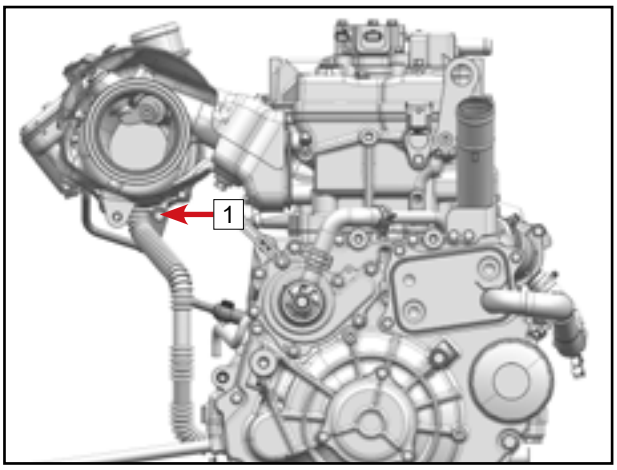

Tighten bolts [1], [2] and [3] to the specified torque.

Turbocharger Water Inlet Pipe Bolt Torque	
Bolt [1]	10 N•m (7.3 ft-lb.)
Bolts [2] [4]	30 N•m (22.1 ft-lb.)

© CFMOTO Powersports, Inc. This manual is subject to all applicable copyright laws. Reproduction or duplication in any form, whole or in part, is strictly prohbited.

Place the turbocharger oil inlet pipe assembly [6] into position.

Install the bolt [1], and connect the oil inlet pipe to the turbocharger.

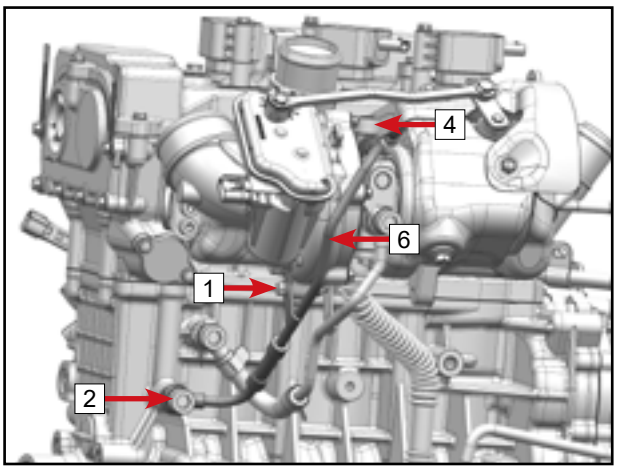

Install turbocharger oil inlet bolt [4] and turbocharger oil inlet gaskets [5] as shown.

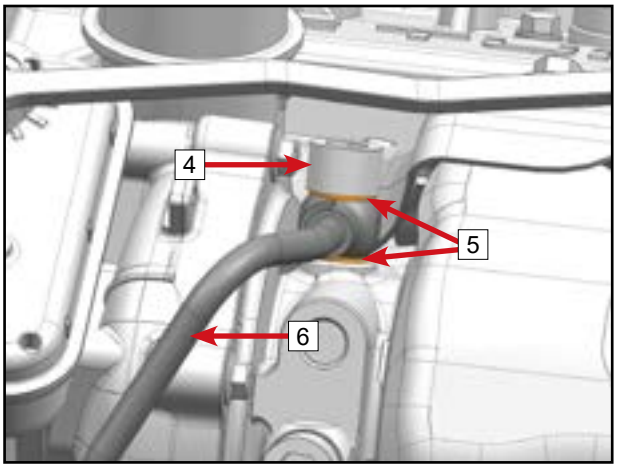

Install turbocharger oil inlet bolt [2] and turbocharger oil inlet gaskets [3] as shown.

Tighten bolts [1], [2] and [4] to specified torque.

Turbocharger Oil Inlet Pipe Bolt Torque	
Bolt [1]	10 N•m (7.3 ft-lb.)
Bolt [2]	40 N•m (29.5 ft-lb.)
Bolt [4]	30 N•m (22.1 ft-lb.)

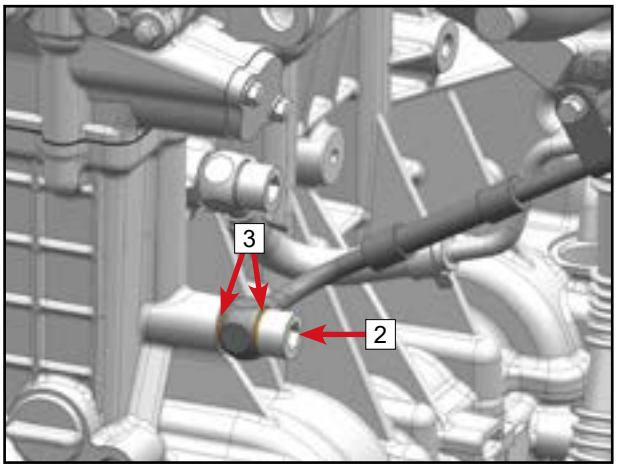

Install the turbocharger water outlet pipe assembly [4].
Install bracket bolt [1].
Install turbocharger water outlet bolt [2] and turbocharger outlet gaskets [3] as shown.
Tighten bolts [1] and [2] to specified torque.

Turbocharger Water Outlet Pipe Bolt Torque	
Bolt [1]	10 N•m (7.3 ft-lb.)
Bolt [2]	30 N•m (22.1 ft-lb.)

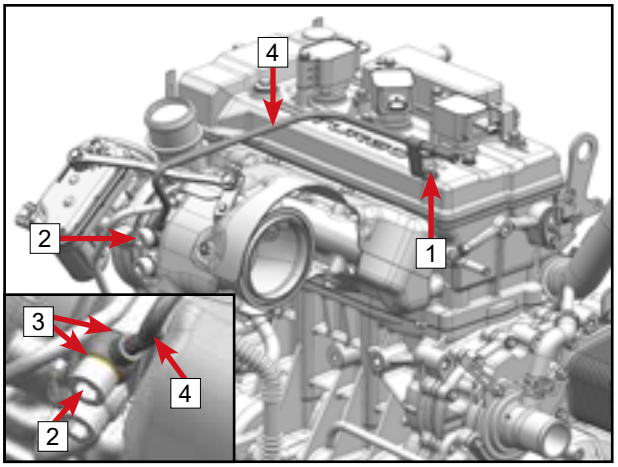

© CFMOTO Powersports, Inc. This manual is subject to all applicable copyright laws. Reproduction or duplication in any form, whole or in part, is strictly prohibited.

5.5.24 Dipstick Tube Installation

Install dipstick tube assembly 2.

Install bolt 1, tighten to specified torque.

Dipstick Tube Bolt 1	
Torque	45 N•m (33.2 ft-lb.)

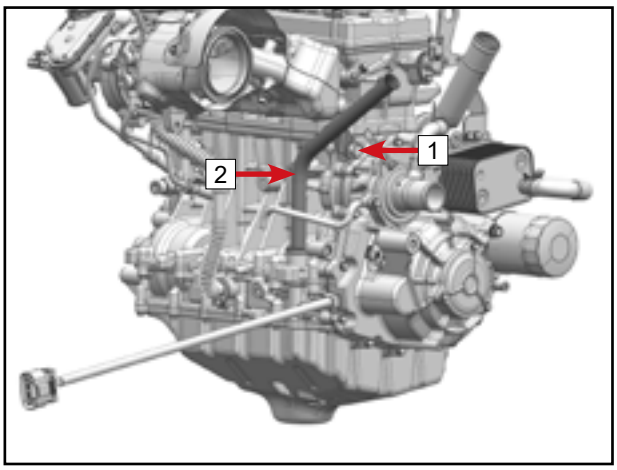

5.5.25 Gearbox Installation

Place the gearbox connecting bracket 2 3 in place.

NOTE
Magneto stator cable A routes through the bracket 3.

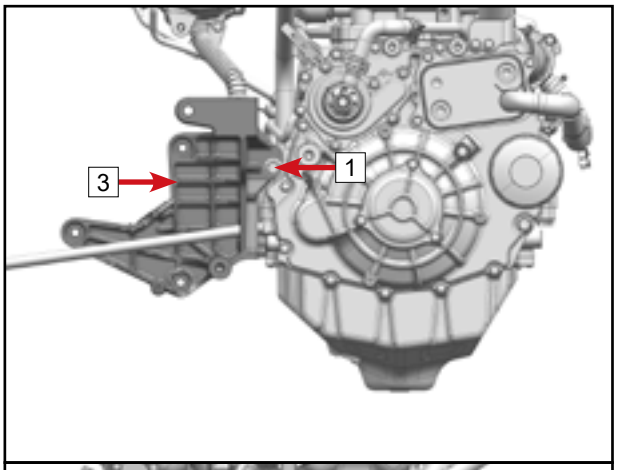

Install bolt M10×40 1 and M8×38 2 to secure the bracket 3.

Tighten bolt 1 and bolt 2 to the specified torque.

Gearbox Connecting Bracket 2 Bolt Torque	
M10 bolt 1	45 N•m (33.2 ft-lb.)
M8 bolt 2	27 N•m (19.9 ft-lb.)

2

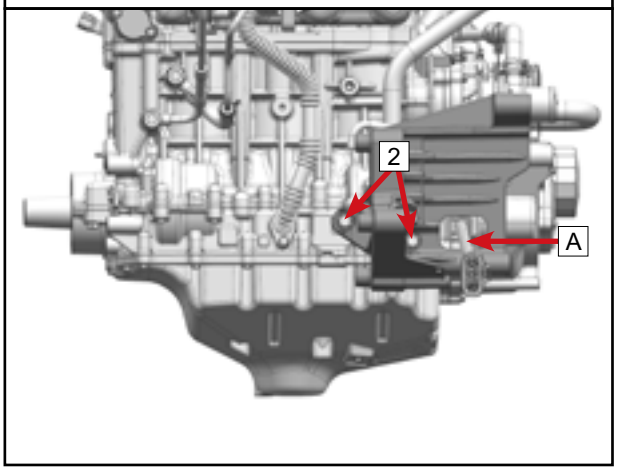

Ensure dowel pins 1 are installed.

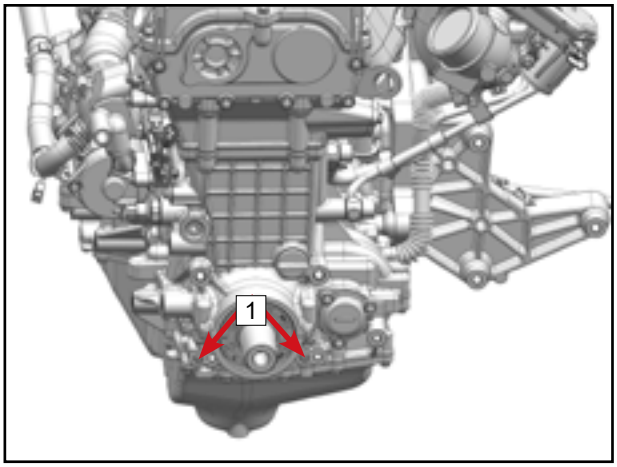

© CFMOTO Powersports, Inc. This manual is subject to all applicable copyright laws. Reproduction or duplication in any form, whole or in part, is strictly prohbited.

Install the gearbox assembly [3] into place.

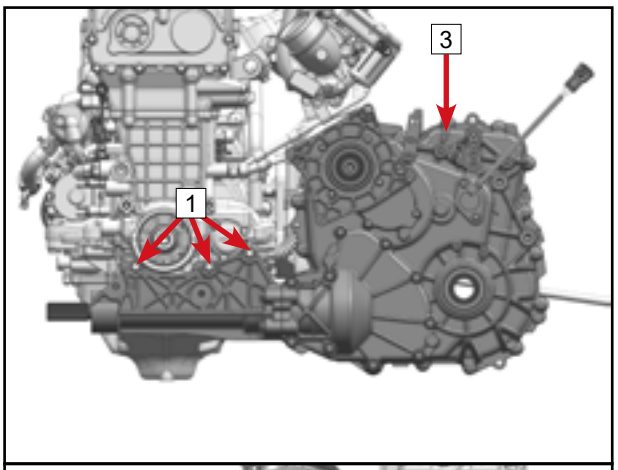

Install bolt M8×25 [1] and bolt M8×38 [2], then tighten to the specified torque.

Gearbox Fixing Bolt [1] [2]	
Torque	27 N•m (19.9 ft-lb.)

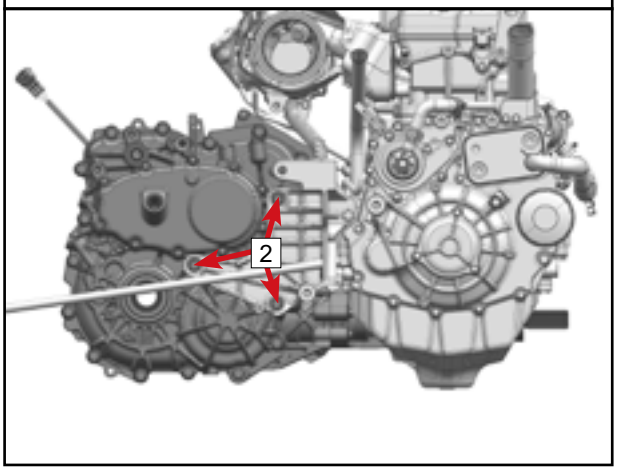

Position the turbocharger bracket [3] in place.
Install the bolt [1] and bolts [2], and tighten to the specified torque.

Turbocharger Bracket Bolts [1] [2]	
Torque	27 N•m (19.9 ft-lb.)

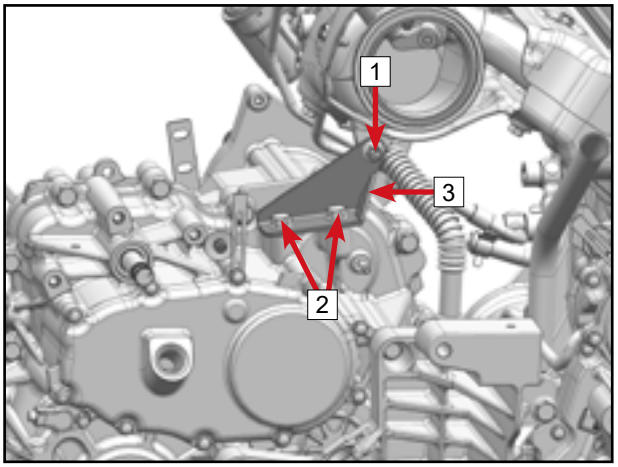

© CFMOTO Powersports, Inc. This manual is subject to all applicable copyright laws. Reproduction or duplication in any form, whole or in part, is strictly prohibited.

5.5.26 CVT Case Installation

Install the CVT case 4.

Apply 243 thread locker to bolts M10×1.25×30 1, M8×22 2 and M6×25 3.

Install bolts 1, 2 and 3, and tighten them diagonally and crosswise to the specified torque.

CVT Case Bolt Torque	
Bolt M10 1	30 N•m (22.1 ft-lb.)
Bolt M8 2	27 N•m (19.9 ft-lb.)
Bolt M6 3	10 N•m (7.3 ft-lb.)

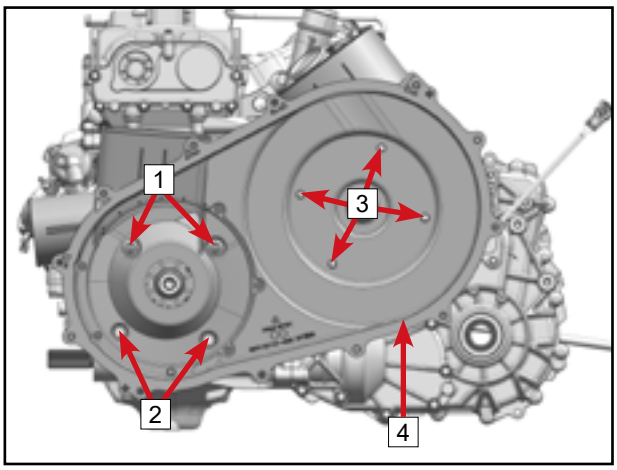

Place the windage tray 2 into position.

Install bolts 1, tighten to specified torque.

CVT Windage Tray Bolts 1	
Torque	10 N•m (7.3 ft-lb.)

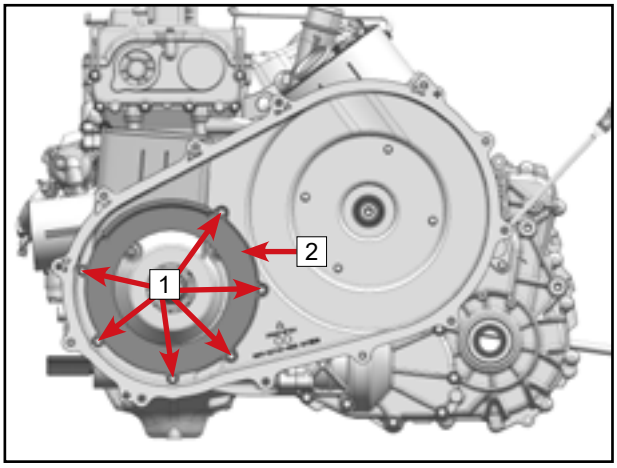

Install CVT and CVT case cover. (see Chapter 04 CVT and Transmission)

5.5.27 Drain Bolt Installation

Crankcase:

Place washer 1 onto the magnetic drain bolt 2.

Install the drain bolt 2, then tighten to the specified torque.

Magnetic Drain Bolt 2 (Engine Oil)	
Torque	25 N•m (18.4 ft-lb.)

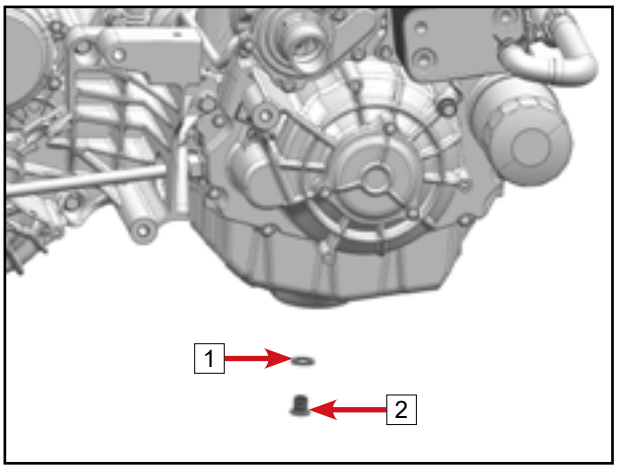

Gearbox:

Place washer 1 onto magnetic drain bolt 2.

Install magnetic drain bolt 2, tighten to specified torque.

Magnetic Drain Bolt 2 (Gear Oil)	
Torque	25 N•m (18.4 ft-lb.)

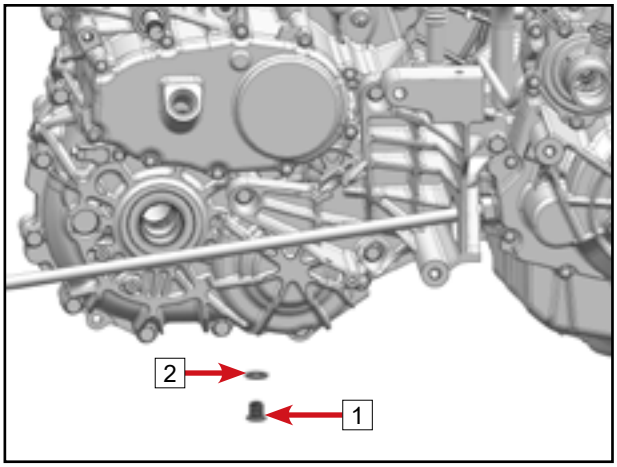

© CFMOTO Powersports, Inc. This manual is subject to all applicable copyright laws. Reproduction or duplication in any form, whole or in part, is strictly prohibited.

5.5.28 Dipstick and Fill Plug Installation

Crankcase:

Fill the empty crankcase with the recommended amount of engine oil at the dipstick tube hole.

Engine Oil Capacity (Engine Overhaul)	
Capacity	4.2 L
Oil type	SAE 5W-40, API SP or higher synthetic oil

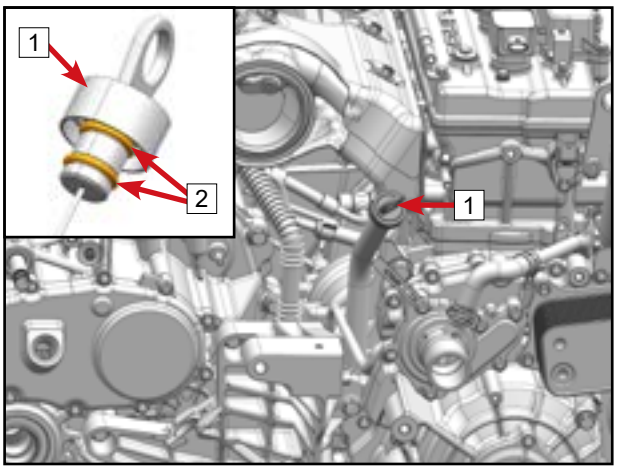

Make sure the O-ring 2 is installed on the dipstick assembly 1.
Insert the dipstick 1 into the dipstick tube 3 and install it in place.

Gearbox:

Fill the empty gearbox with the recommended amount of gear oil through the fill plug hole.

Gear Oil Capacity	
Capacity	3.0 L
Gear oil type	SAE 75W/90-GL5

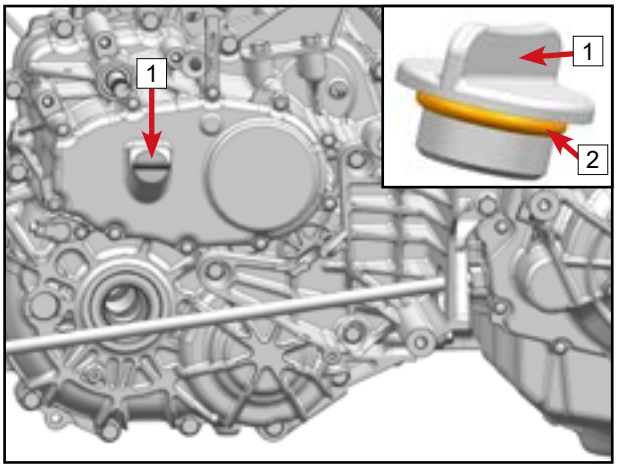

Make sure the O-ring 2 is installed on the fill plug 1.
Install the fill plug 1 on the gearbox and tighten sufficiently.

© CFMOTO Powersports, Inc. This manual is subject to all applicable copyright laws. Reproduction or duplication in any form, whole or in part, is strictly prohbited.

5.6 Intake Manifold Installation

Intake Manifold Installation

Make sure seal rings [1] are installed on the intake manifold.

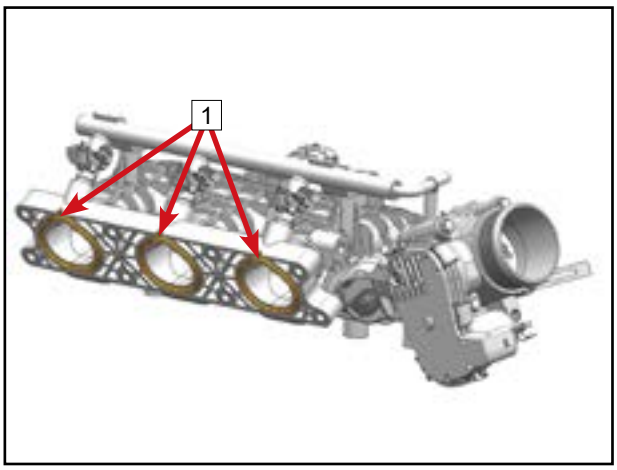

Place the intake manifold [2] into position.
Install bolts [1], then cross-diagonally tighten to the specified torque.

Intake Manifold Bolts [1]	
Torque	10 N•m (7.3 ft-lb.)

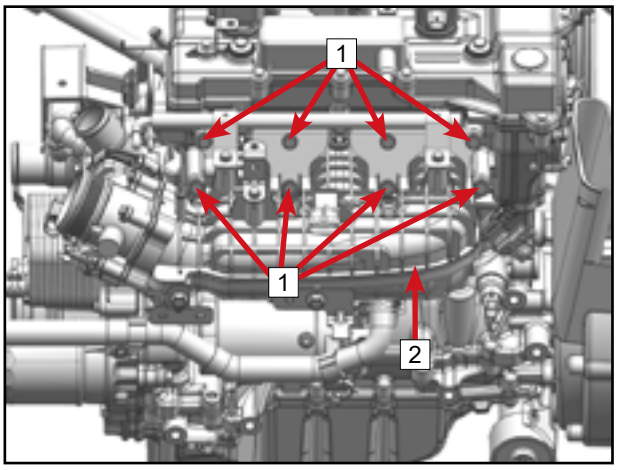

Place the intake manifold bracket [2] into position.
Install bolts [1], then tighten to the specified torque.

Intake Manifold Bracket Bolt [1]	
Torque	27 N•m (19.9 ft-lb.)

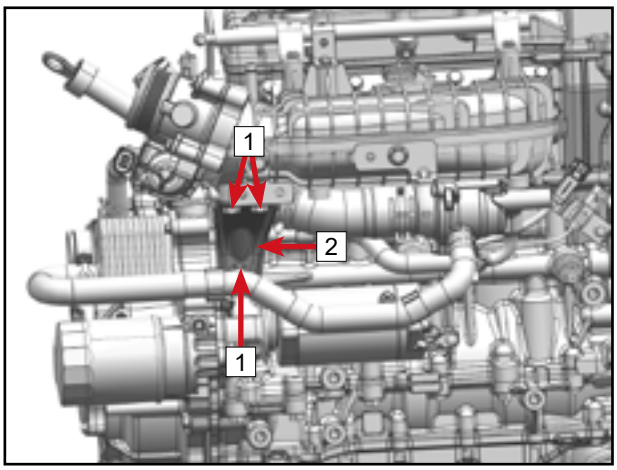

© CFMOTO Powersports, Inc. This manual is subject to all applicable copyright laws. Reproduction or duplication in any form, whole or in part, is strictly prohibited.

Place the muffler support bracket [2] in position.
Install the bolts [1], then tighten to the specified torque.

Muffler Support Bracket Bolt [1]	
Torque	30 N•m (22.1 ft-lb.)

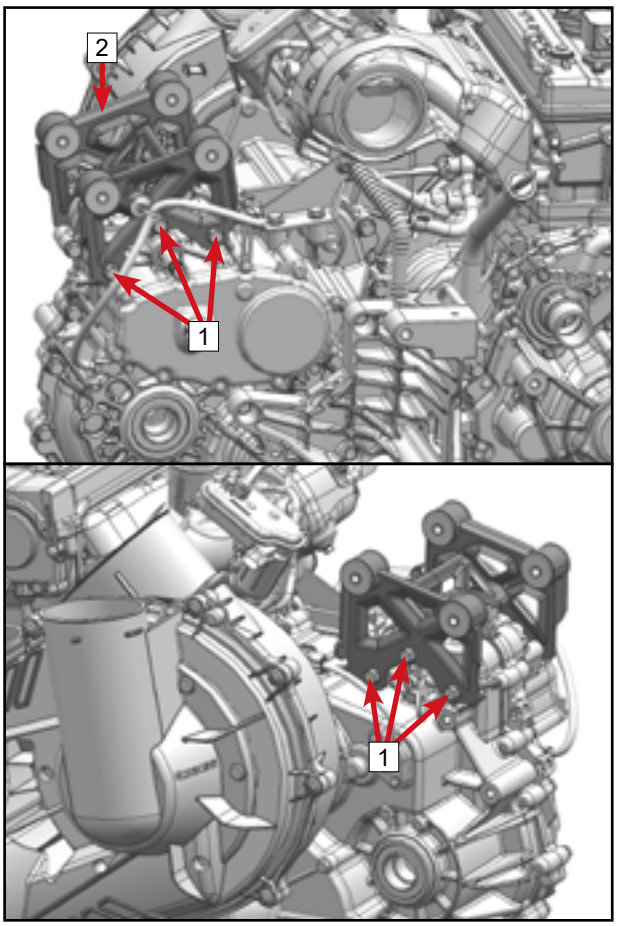

Insert the retainer [1] and tie band [2] into the bracket [3] hole.

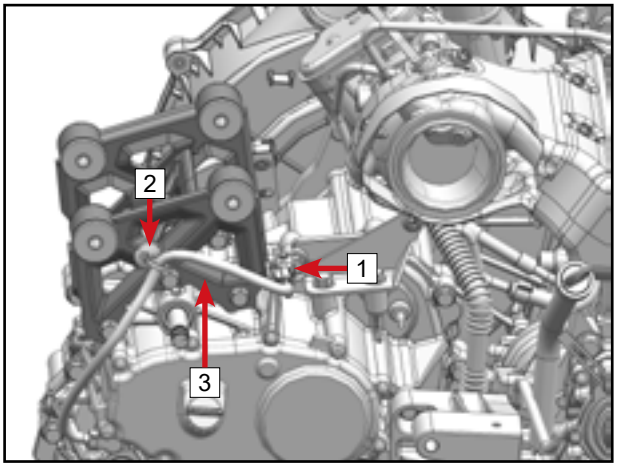

© CFMOTO Powersports, Inc. This manual is subject to all applicable copyright laws. Reproduction or duplication in any form, whole or in part, is strictly prohibited.

Motor Mount Installation

Place rear motor mount [2] into position.

Apply 243 thread locker to bolts [1].

Install bolts [1], then tighten to the specified torque.

Bolts [1] (rear motor mount and engine)	
Torque	45 N•m (33.2 ft-lb.)

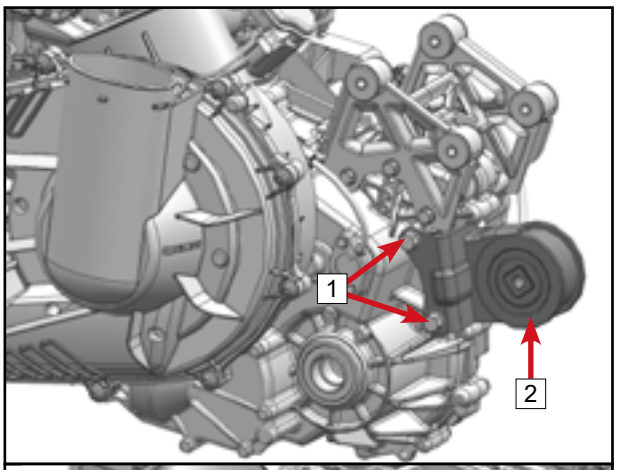

Place the LH front motor mount [2] into position.

Apply 243 thread locker to bolts [1].

Install bolts [1], then tighten to the specified torque.

Bolts [1] (LH motor mount and engine)	
Torque	45 N•m (33.2 ft-lb.)

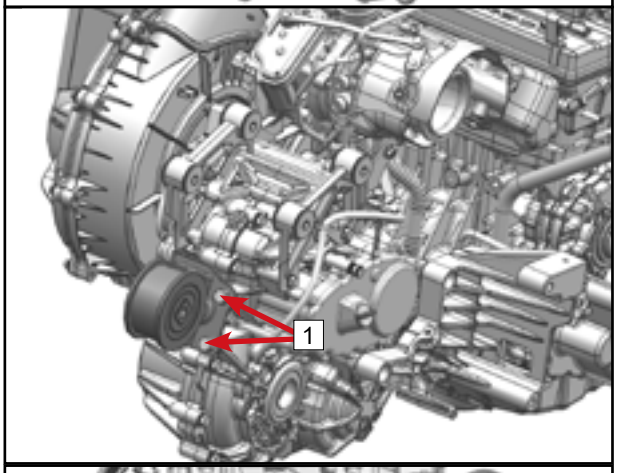

Place the RH front suspension [4] into position.

Apply 243 thread locker to bolts [3].

Install bolts [3], then tighten to the specified torque.

Bolt [3] (RH motor mount and engine)	
Torque	45 N•m (33.2 ft-lb.)

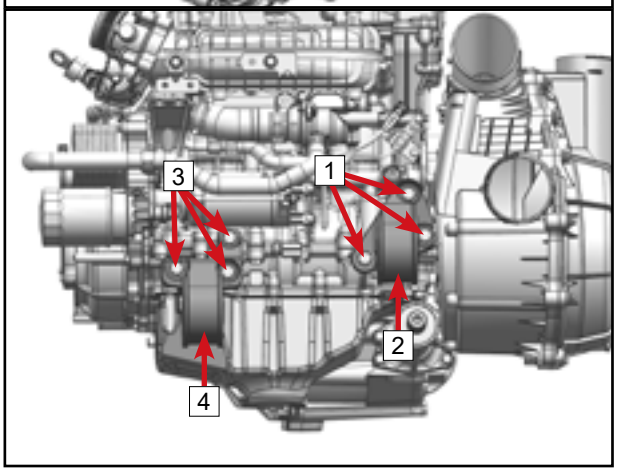

Engine Installation

Using a suitable lifting device, carefully place the engine into the vehicle and align the mounting locations.

Install the bolt [1] that secures the rear motor mount to the frame.

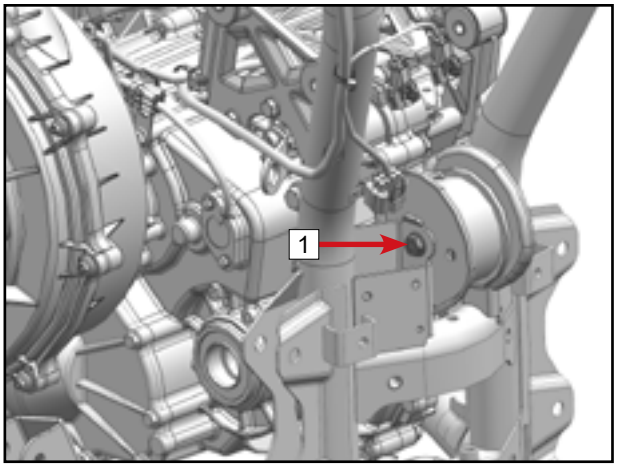

© CFMOTO Powersports, Inc. This manual is subject to all applicable copyright laws. Reproduction or duplication in any form, whole or in part, is strictly prohbited.

Install the bolt 1 that secures the RH front suspension to the frame.

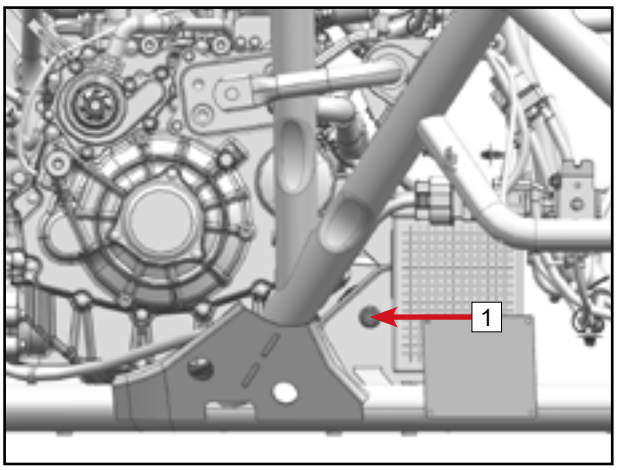

Install the bolt 1 that secures the LH front suspension to the frame.

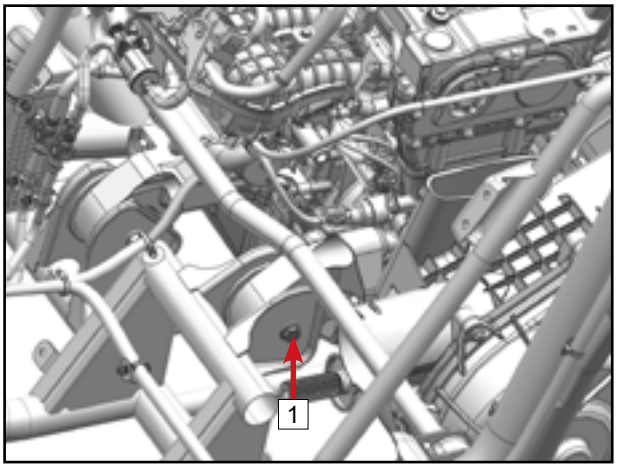

Install LH front motor mount lock nut 1, then tighten bolt 2 to the specified torque.

Bolt 2 (LH motor mount and frame)	
Torque	50 N•m (36.9 ft-lb.)

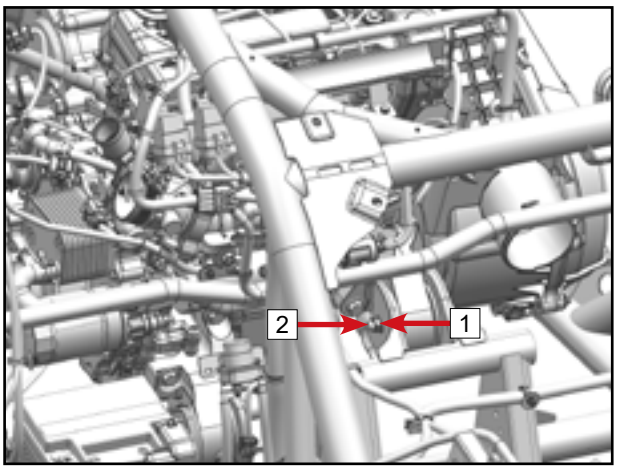

Install RH front motor mount lock nut 1, then tighten bolt 2 to the specified torque.

Bolt 2 (RH motor mount and frame)	
Torque	50 N•m (36.9 ft-lb.)

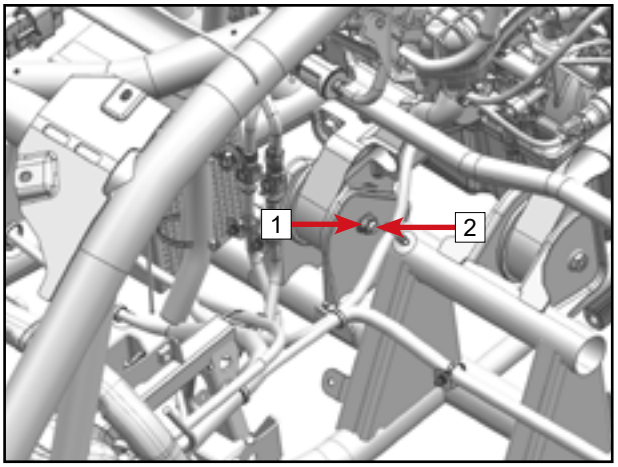

© CFMOTO Powersports, Inc. This manual is subject to all applicable copyright laws. Reproduction or duplication in any form, whole or in part, is strictly prohibited.

Install rear motor mount lock nut [1], then tighten bolt [2] to the specified torque.

Bolt [2] (Rear motor mount and frame)	
Torque	50 N•m (36.9 ft-lb.)

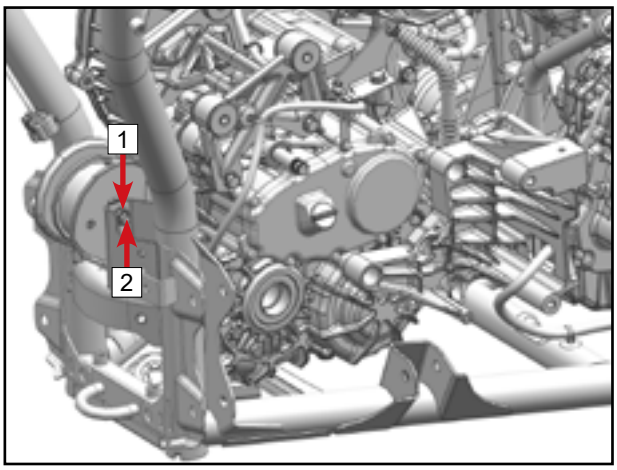

Install the front drive shaft [1]. (Refer to chapter 07)

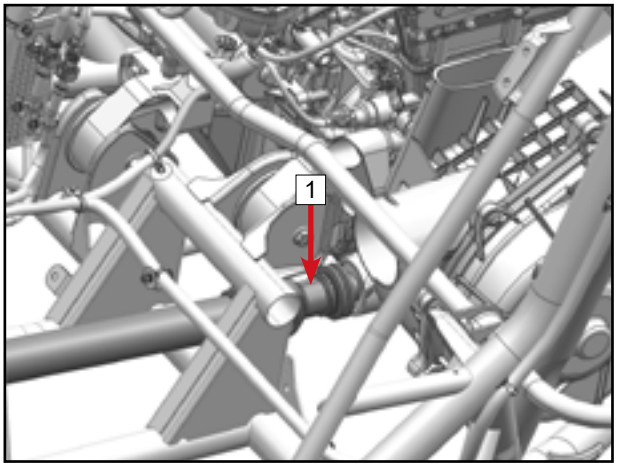

Remove bolt [1].
Place the engine ground cable [2] into position.
Install bolt [1] and tighten to specified torque.

Bolt [1]	
Torque	10 N•m (7.3 ft-lb.)

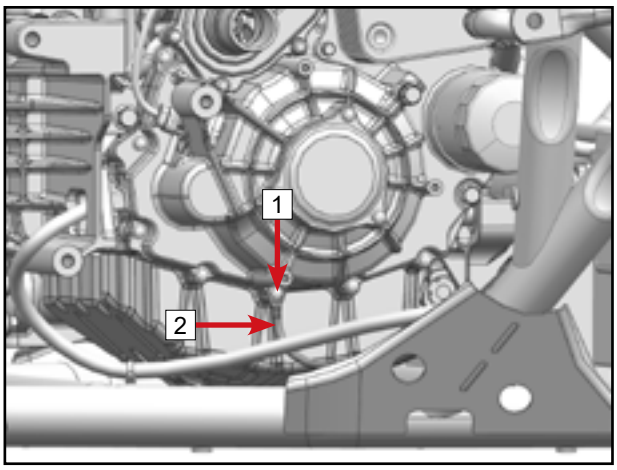

Place the positive wire [2] on the starter motor.
Install and tighten the nut [1] sufficiently.

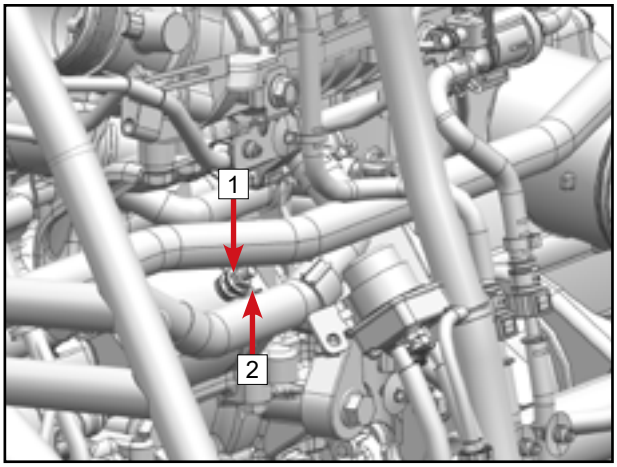

© CFMOTO Powersports, Inc. This manual is subject to all applicable copyright laws. Reproduction or duplication in any form, whole or in part, is strictly prohibited.

Plug in the knock sensor connector [3].
Plug in the coolant temperature sensor connector [2].
Plug in the oil pressure sensor connector [1].

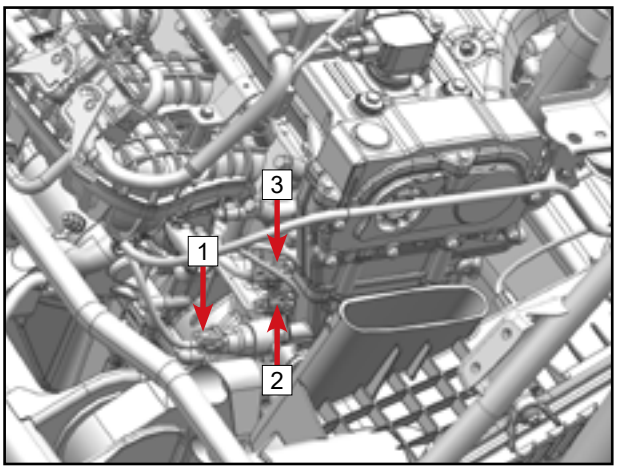

Install the fuel pipe [5] to the fuel rail.
Plug in the boost pressure temperature sensor connector [3].
Install the EVAP canister magentic valve [2] to the bracket.
Plug in the EVAP canister magentic valve connector [1].
Insert the tie band [8] and [9] into the hole in the intake manifold.
Insert the tie band [6] and [7] into the hole in the bracket.
Insert the tie band [4] into the hole in the bracket.

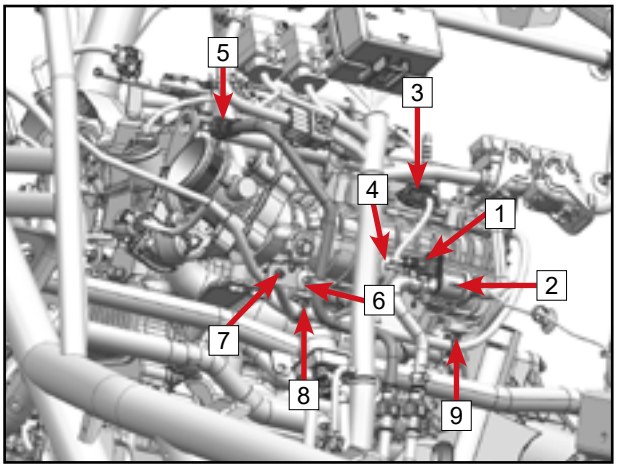

Install tube [2] to the intake manifold.
Tighten the clamp [1].
Insert the tie band [3] into the hole in the bracket.

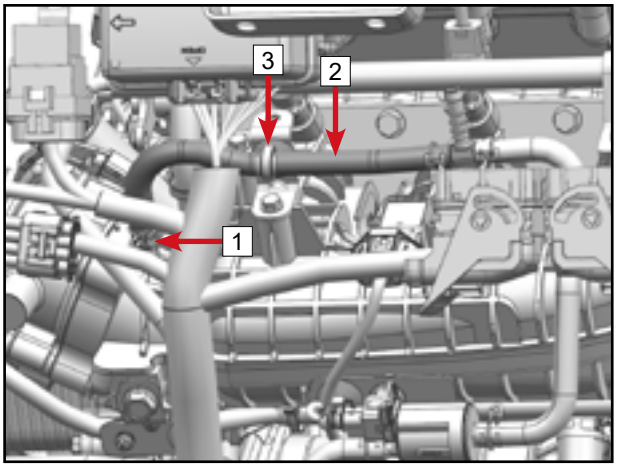

Plug in the crankshaft position sensor connector.
Plug in the throttle body connector [3].
Plug in the camshaft position sensor connector [2].
Insert the tie band [1] into the hole in the intake manifold.

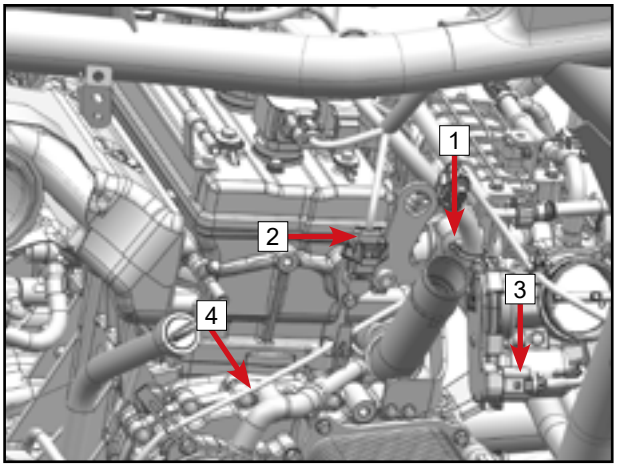

© CFMOTO Powersports, Inc. This manual is subject to all applicable copyright laws. Reproduction or duplication in any form, whole or in part, is strictly prohibited.

Plug in the ignition coil connector [2].
Plug in the fuel injector connector [1].
Insert the tie band [3] and [4] into the hole in the bracket.

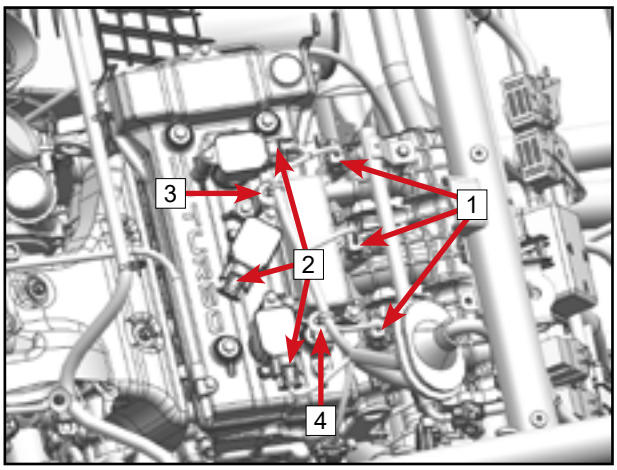

Plug in the magneto stator connector [1].
Insert the tie band [2] into the hole in the frame.

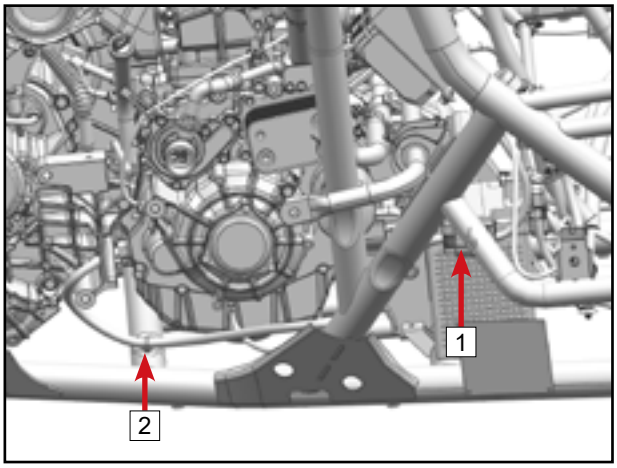

Plug in the gear sensor connector [1].
Plug in the turbocharger connector [3].
Attach the tie band [2] and [4] to the CVT case.

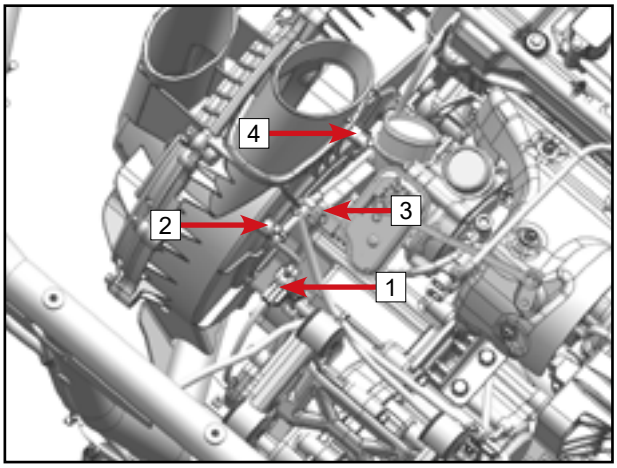

Plug in the speed sensor connector [1].
Insert the tie band [2] into the hole in the bracket [3].

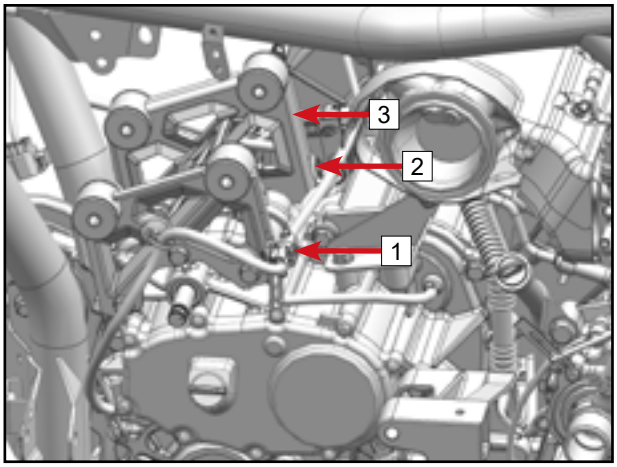

© CFMOTO Powersports, Inc. This manual is subject to all applicable copyright laws. Reproduction or duplication in any form, whole or in part, is strictly prohbited.

Place a new clamp [1] over the breather tube [2].
Install the breather tube [2] on the gearbox.
Snap on the clamp [1].

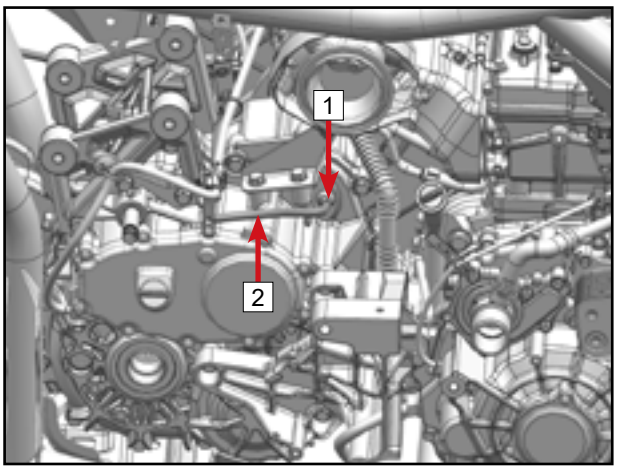

Make sure the gearbox and the shifter assembly is in neutral.
Install the shift swing arm assembly [3].
Ensure that the line mark [A] is aligned with the swing arm gap [B].
Install bolts [2] and [1].

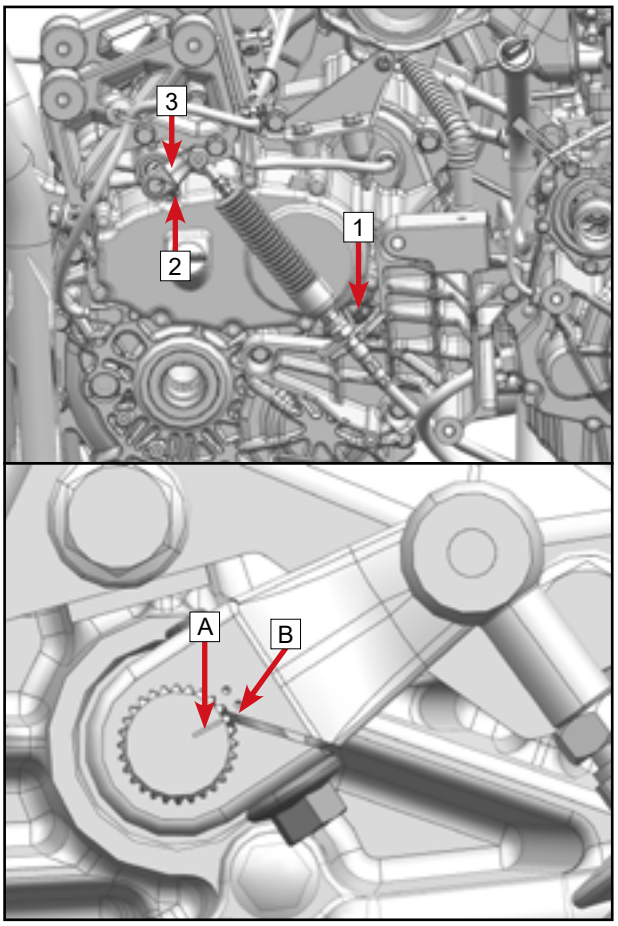

Place the pipe clamp [2] in position.
Install bolt [1].

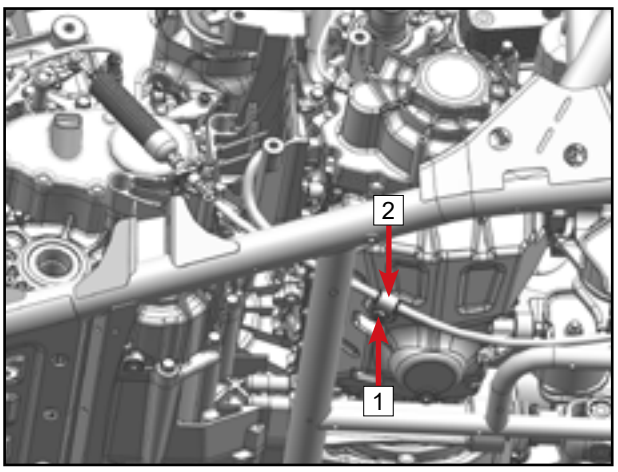

© CFMOTO Powersports, Inc. This manual is subject to all applicable copyright laws. Reproduction or duplication in any form, whole or in part, is strictly prohibited.

Ensure that a new flange gasket [1] is installed on the turbocharger.

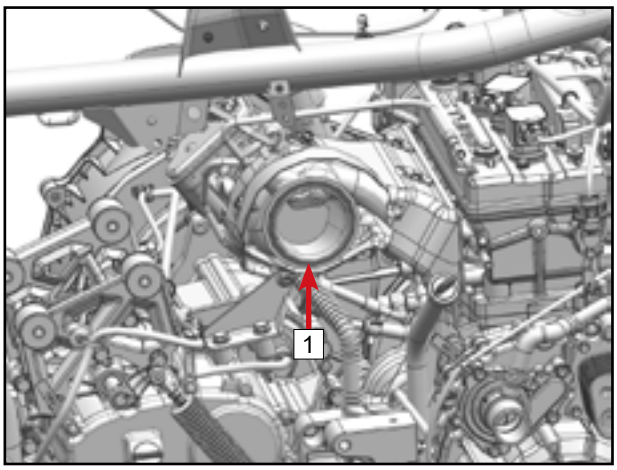

Place the exhaust system [2] into position. Install the bracket bolts [1] and lock nuts, then tighten the bolts [1] to the specified torque.

Exhaust Braket Bolts [1]	
Torque	30 N•m (22.1 ft-lb.)

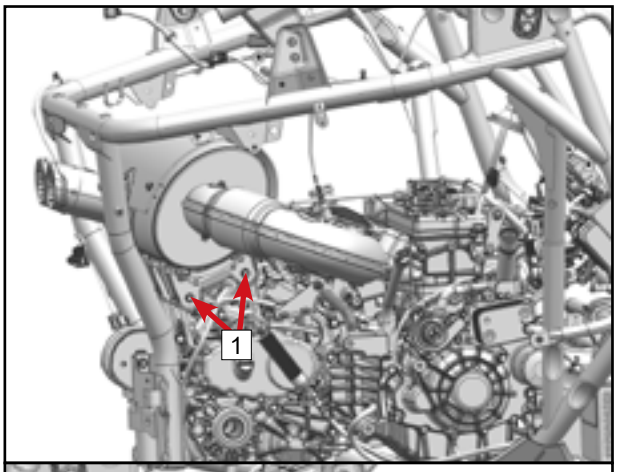

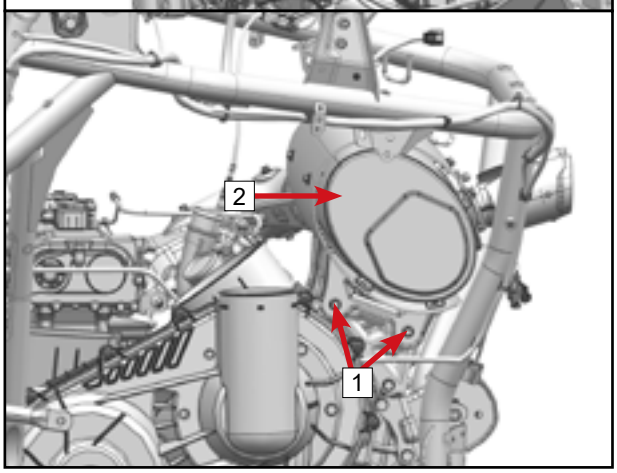

Tighten the clamp [1].
Plug in the oxygen sensor connector.

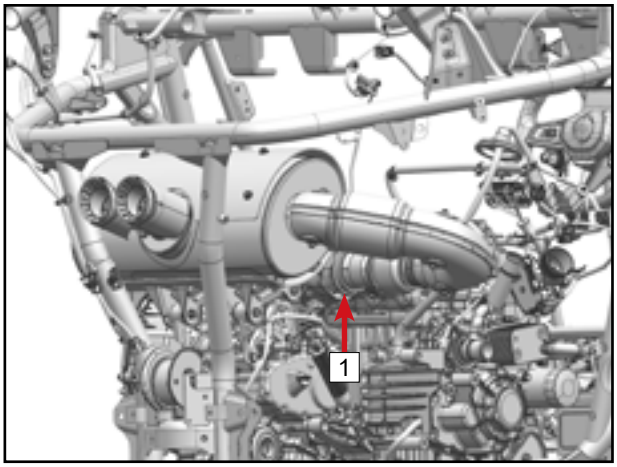

© CFMOTO Powersports, Inc. This manual is subject to all applicable copyright laws. Reproduction or duplication in any form, whole or in part, is strictly prohbited.

Place the rear cargo box mounting bracket [2] in position.
Install the bolt [1], then tighten to the specified torque.

Rear Cargo Box Mounting Bracket Bolt [1]	
Torque	25 ~ 30 N•m (18.4 ~ 22.1 ft-lb.)

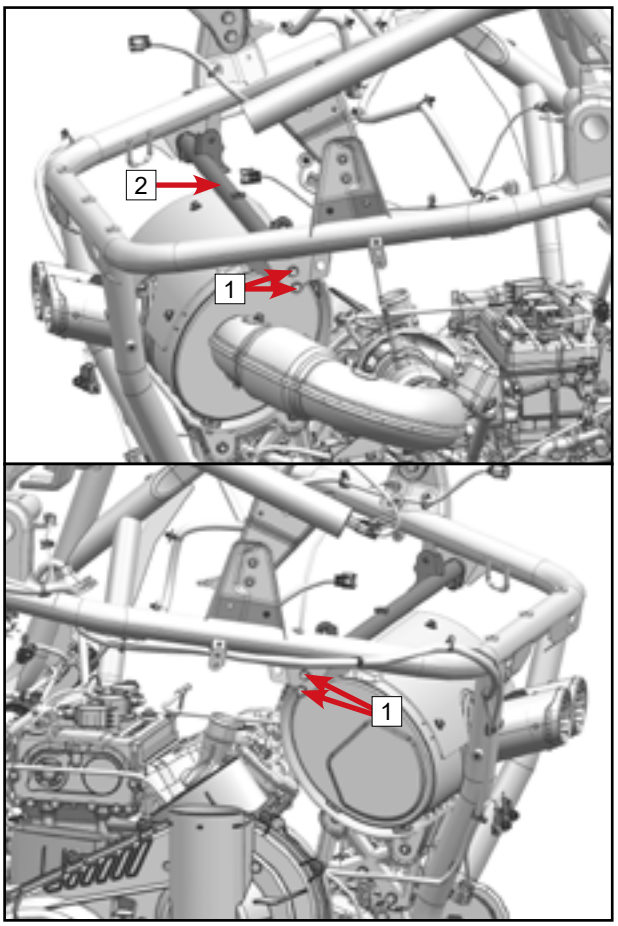

Place the air filter housing assembly into position.
Install the air filter outlet tube [2] to the turbocharger.
Ensure that tab [A] is aligned with boss [B] (See inset).
Tighten the clamp [1].

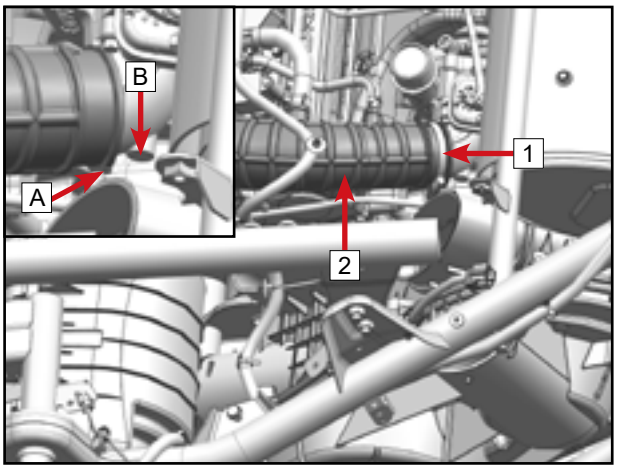

Make sure that the connecting pipe [2] passes through the pipe clamps [3].
Install the connecting pipe [2] to the pipe joint as shown.
Tighten the clamp [1].

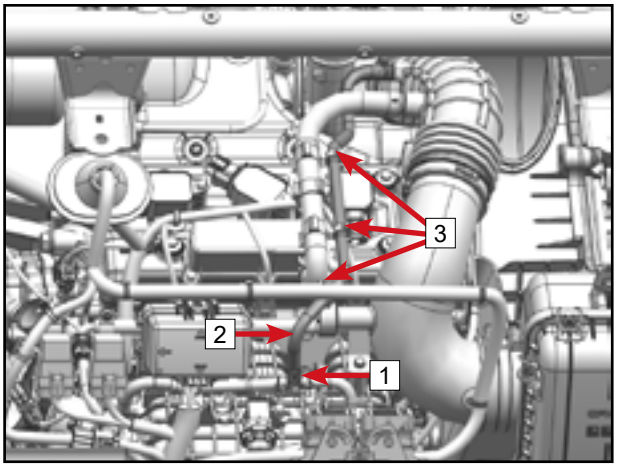

© CFMOTO Powersports, Inc. This manual is subject to all applicable copyright laws. Reproduction or duplication in any form, whole or in part, is strictly prohibited.

Ensure the crankcase breather [2] passes through the clamps [3].
Connenct the breather hose [2] to the oil/air separator.
Tighten the clamp [1].

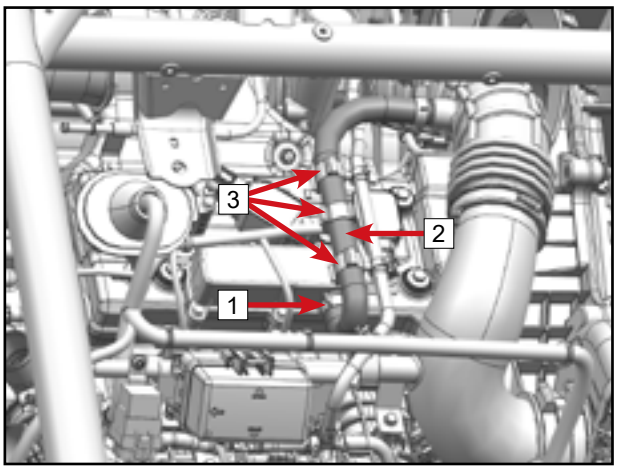

Place intercooler connection bracket and cooling system [3] into position.
Install bolts [2] and tighten to the specified torque.

Intercooler Connection Bracket Bolt [1]	
Torque	25 ~ 30 N•m (18.4 ~ 22.1 ft-lb.)

Install the tie band [1], and secure the wire harness on the bracket.

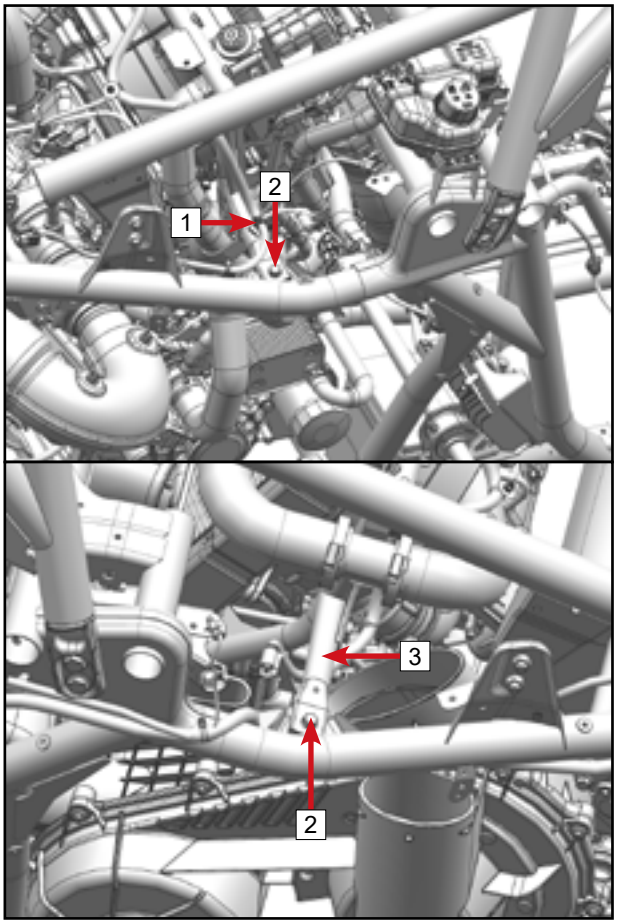

© CFMOTO Powersports, Inc. This manual is subject to all applicable copyright laws. Reproduction or duplication in any form, whole or in part, is strictly prohibited.

Place the intercooler reinforcing pipe [2] into position.
Install the bolts [1] and tighten to the specified torque.

Intercooler Reinforcing Pipe Bolt [1]	
Torque	25 ~ 30 N•m (18.4 ~ 22.1 ft-lb.)

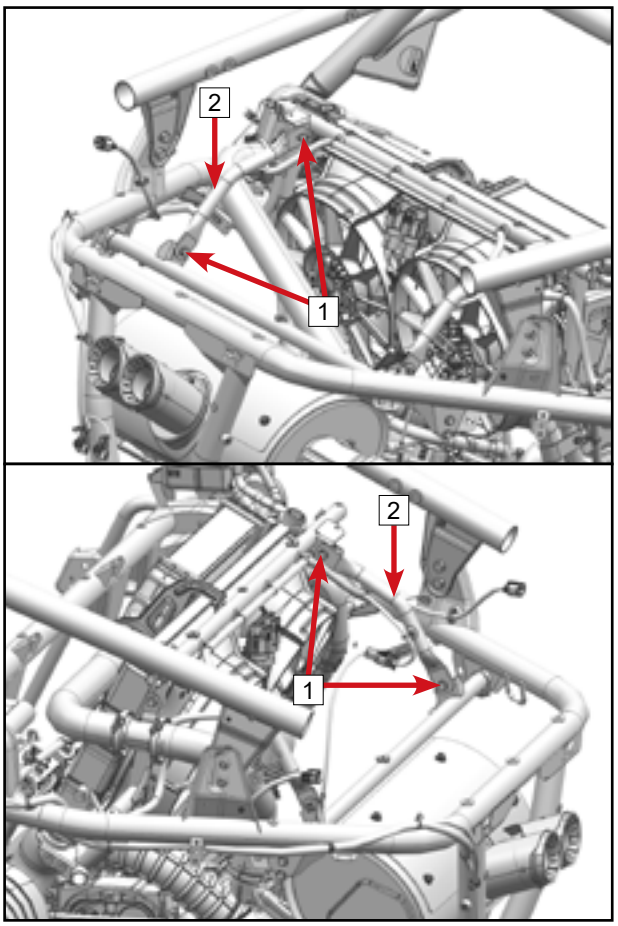

Secure the coolant expansion tank [2] to the frame with bolts [1].

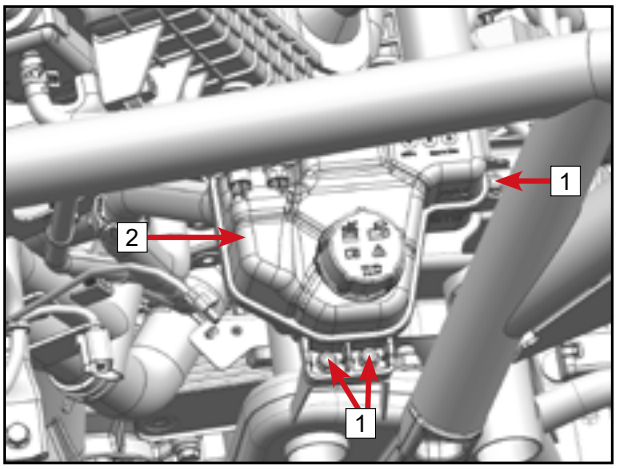

Insert the relevant tie bands [2] into the intercooler connection bracket [3] hole and the reinforcing pipe [4] holes.
Plug in the radiator connector [1].

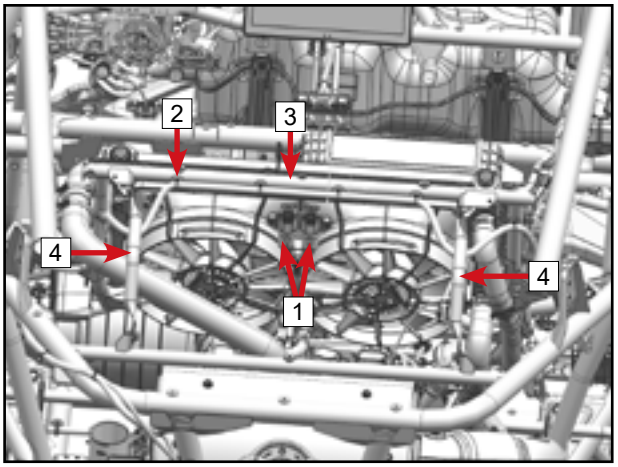

© CFMOTO Powersports, Inc. This manual is subject to all applicable copyright laws. Reproduction or duplication in any form, whole or in part, is strictly prohibited.

Install the coolant degassing tube [2] to the fitting.
Tighten the clamp [1].

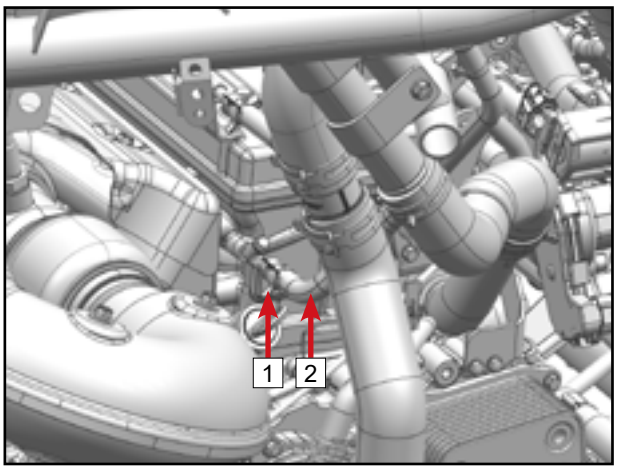

Install the coolant outlet pipe [2] to the turbocharger outlet pipe.
Tighten the clamp [1].

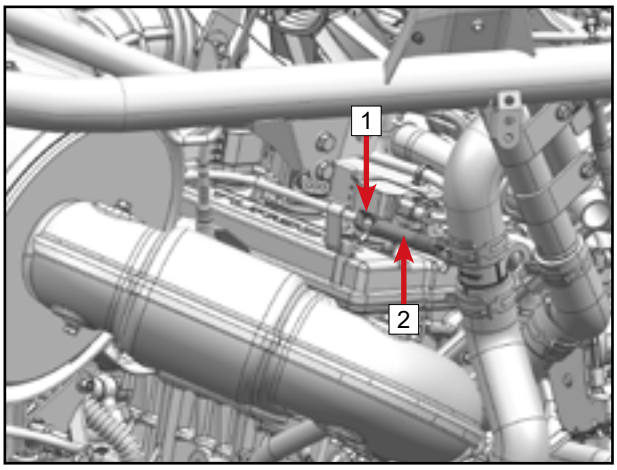

Install the engine coolant outlet pipe [2] to the thermostat outlet pipe, aligning mark [A] with mark [B] (See inset).
Install the clamp [1].

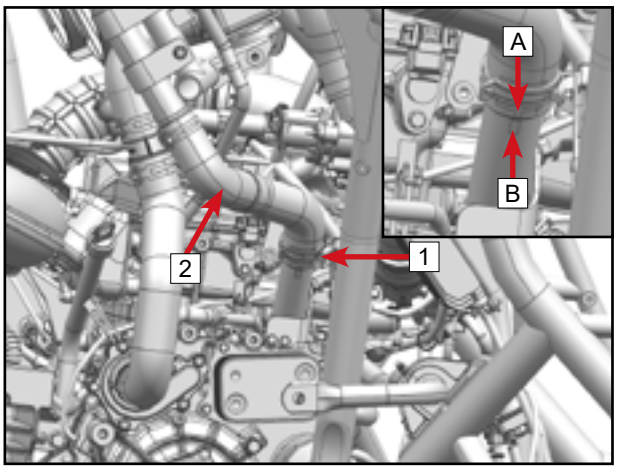

Install intercooler inlet hose 1 [2] to the turbocharger, aligning mark [A] with mark [B] (See inset).
Tighten the clamp [1].

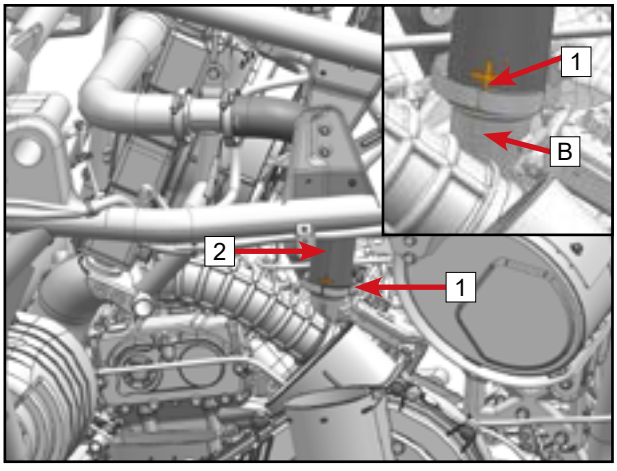

© CFMOTO Powersports, Inc. This manual is subject to all applicable copyright laws. Reproduction or duplication in any form, whole or in part, is strictly prohibited.

Install the throttle body connecting pipe [2] to the throttle valve body, aligning mark [A] with boss [B] (See inset).
Tighten the clamp [1].

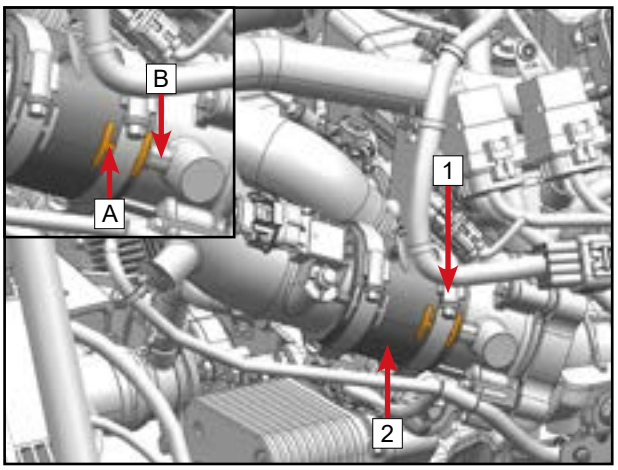

Plug in the intake pressure relief valve connector [2].
Insert the tie band [1] into the hole in the intercooler outlet tube.

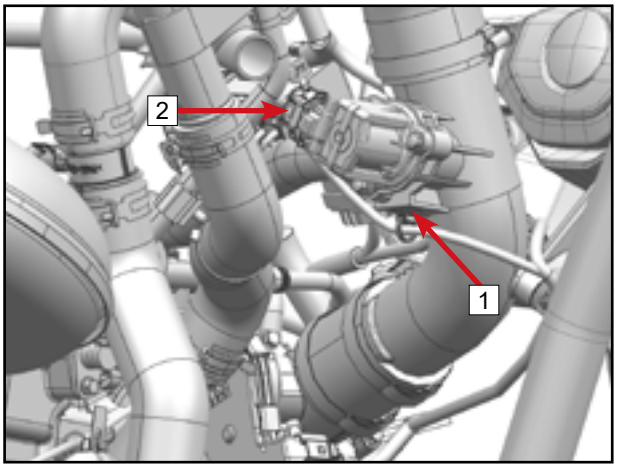

Plug in the boost pressure temperature sensor connector [2].
Insert the tie band [1] into the hole in the intercooler outlet tube.

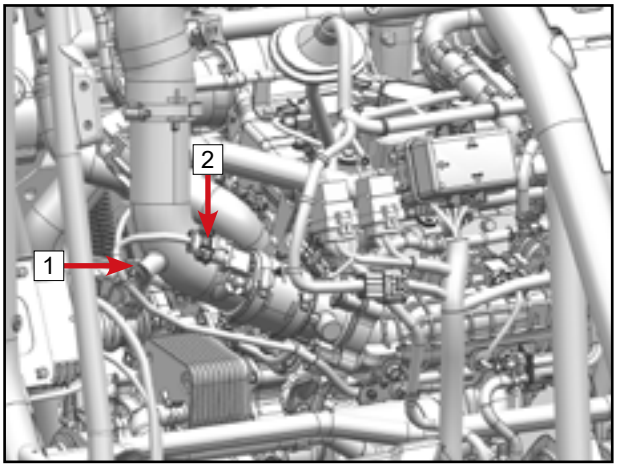

Ensure that the air intake relief valve outlet hose [2] passes through the clamp [3].
Install hose [2] to air filter outlet pipe 1.
Tighten the clamp [1].
Install the bolt [4], and secure the pipe [2] to the bracket.

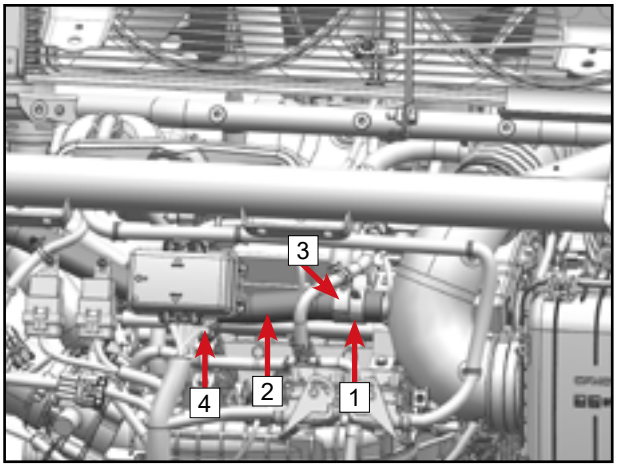

© CFMOTO Powersports, Inc. This manual is subject to all applicable copyright laws. Reproduction or duplication in any form, whole or in part, is strictly prohibited.

Place the air filter inlet pipe assembly [4] into position.
Make sure that tab [A] snaps into slot [B].
Install bolts [2] and [3] to secure air filter inlet pipe assembly [4].
Tighten the clamp [1].

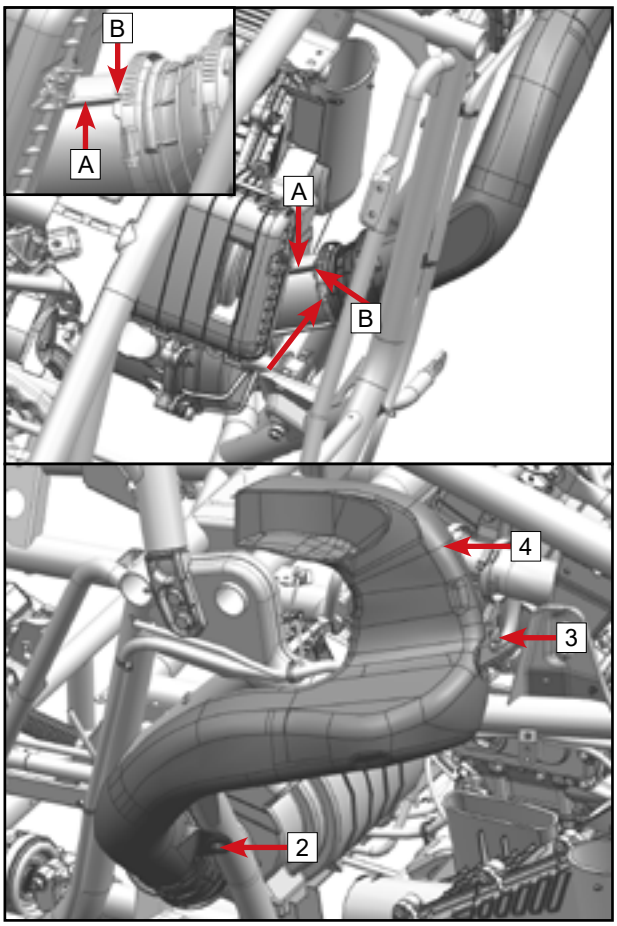

Install the CVT front air inlet pipe [2] on the CVT case (if removed).
Tighten the clamp [1].

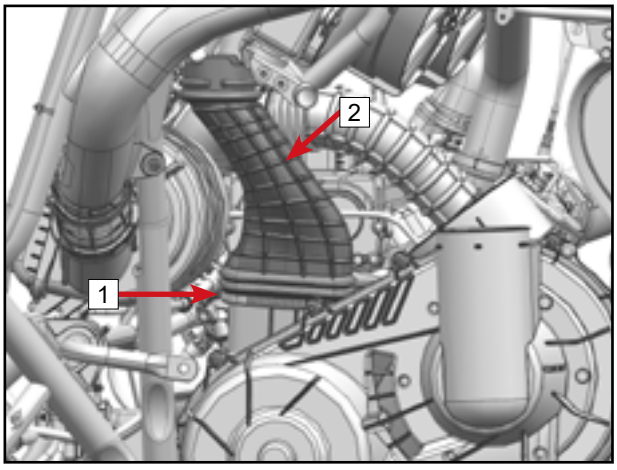

Install CVT front air outlet pipe [2] to CVT case.
Make sure tab [A] snaps into the slot [B].
Tighten the clamp [1].

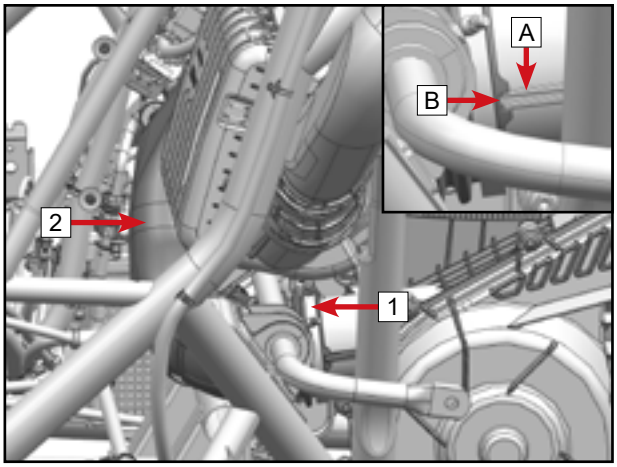

© CFMOTO Powersports, Inc. This manual is subject to all applicable copyright laws. Reproduction or duplication in any form, whole or in part, is strictly prohibited.

Install CVT air outlet pipe assembly [3] to CVT case.
Install bolt [2].
Tighten the clamp [1].

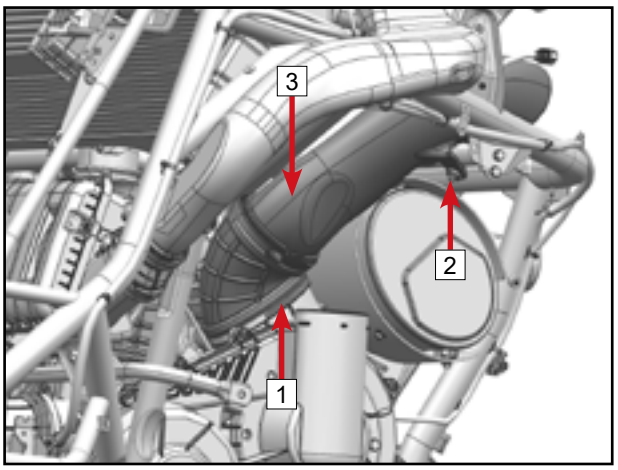

Install CVT air outlet pipe assembly [4] to CVT case cover.
Install bolt [3].
Tighten the clamp [2].
Insert the tie band [1] into the CVT air outlet pipe hole.

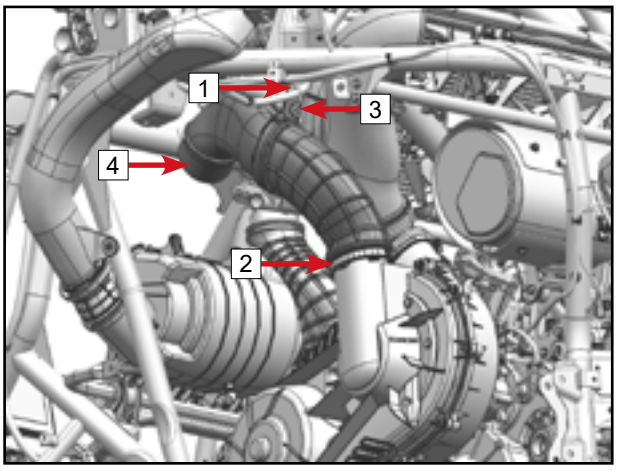

Install engine coolant inlet pipe [2] onto the water pump cover.
Align mark [A] and boss [B].
Tighten the clamp [1].

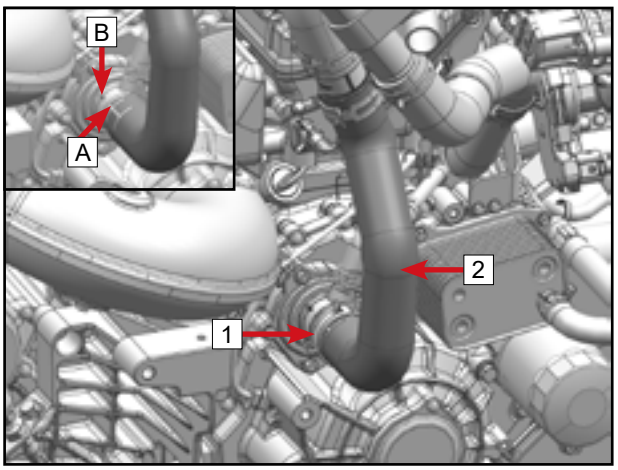

© CFMOTO Powersports, Inc. This manual is subject to all applicable copyright laws. Reproduction or duplication in any form, whole or in part, is strictly prohibited.

Refer to the relevant sections for installation:
- Rear CV shaft, Rear LH/RH Swing Arms, Rear Shock Absorbers, Rear Wheels
- Center and Rear Body Panels
- Seats

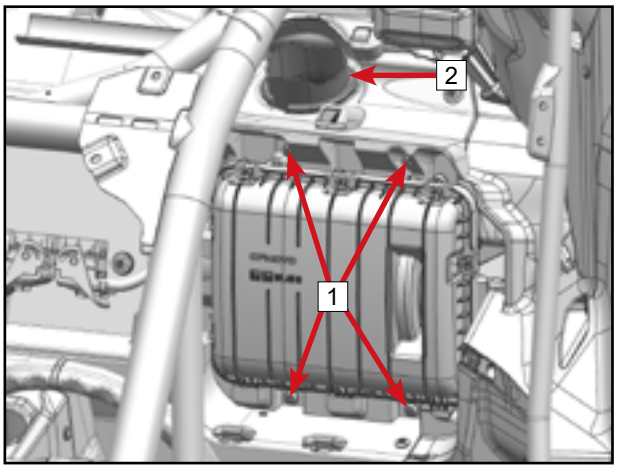

Pay attention to the following details:
Ensure bolts [1] secure the air filter housing to the engine heat shield.
Clamp the CVT front air duct [2] on the engine heat shield.
Fill the cooling system and vent the cooling system.
Checking for leaks.
Test drive the vehicle to verify its proper operation.

© CFMOTO Powersports, Inc. This manual is subject to all applicable copyright laws. Reproduction or duplication in any form, whole or in part, is strictly prohbited.

5.7 Engine Coolant/Oil Heat Exchanger

Overview

This engine is equipped with a coolant/oil heat exchanger (or oil cooler) to cool the oil and keep the oil temperature within a normal operating range, ensuring that the engine has normal lubrication.
The oil cooler is located on the magneto side, near the water pump.

Removal

Refer to the relevant chapters for:
— Draining engine oil.
— Draining the coolant.
Place a rag or towel under the oil cooler to collect residual oil and coolant.

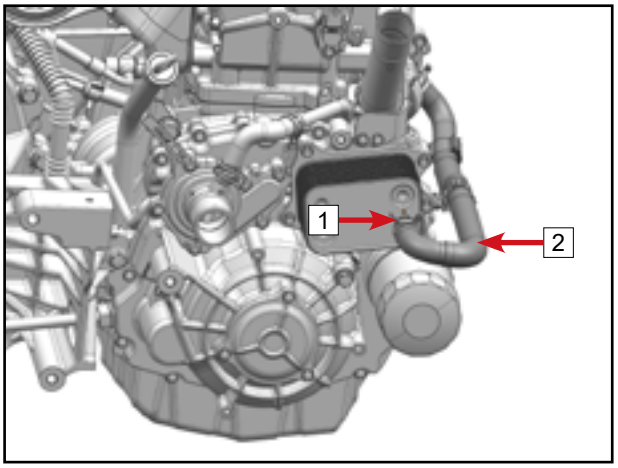

Loosen the clamp 1 and pull out the oil cooler water outlet hose 2 from the oil cooler.

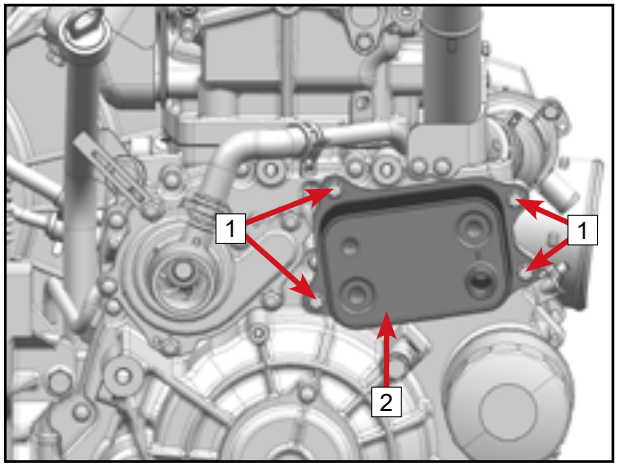

Remove bolts 1.
Remove oil cooler 2.

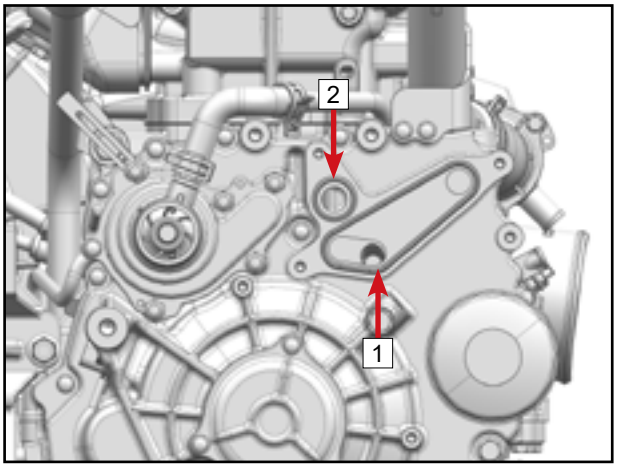

Remove oil cooler seal ring 1 and O-ring 2 from the magneto end cover.

© CFMOTO Powersports, Inc. This manual is subject to all applicable copyright laws. Reproduction or duplication in any form, whole or in part, is strictly prohibited.

Inspection

Inspect the oil cooler seal ring 1 and O-ring 2 for damage and hardening. If damaged, replace with new parts.

Clean the oil cooler 3 by blow-drying the oil and coolant passages separately with compressed air.

Inspect the oil cooler for cracks or other damage. If damaged, replace with a new part.

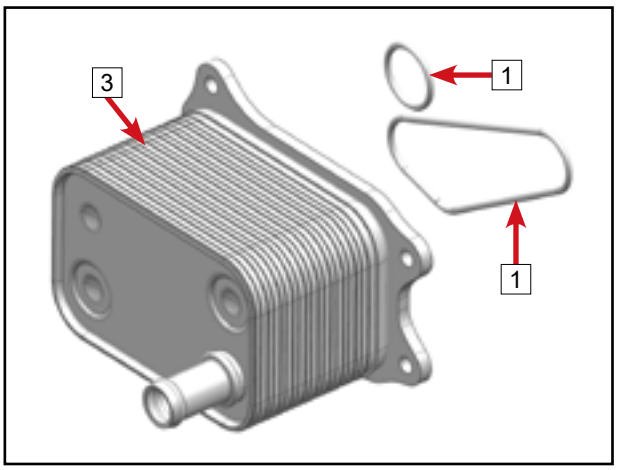

Installation

To install, reverse the removal procedures.

Pay attention to the following details:

Tighten the oil cooler bolts to the specified torque in the order shown.

Oil Cooler Bolt	
Torque	10 N•m (7.3 ft-lb.)

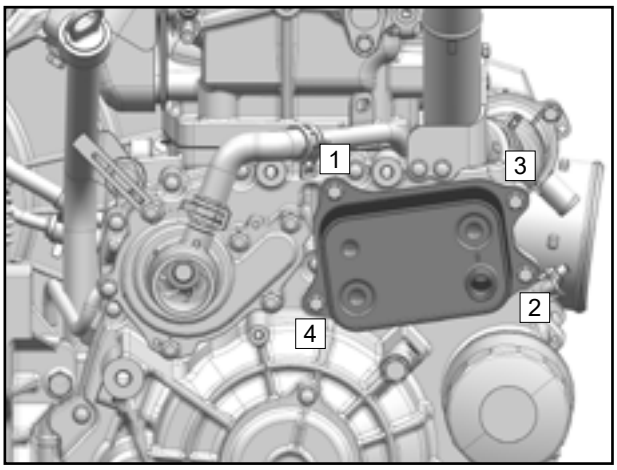

Refer to the relevant chapters to:

— Fill engine oil and check oil level.

— Fill the coolant and vent the cooling system.

© CFMOTO Powersports, Inc. This manual is subject to all applicable copyright laws. Reproduction or duplication in any form, whole or in part, is strictly prohbited.

5.8 Engine Lubrication System

5.8.1 Lubrication System View

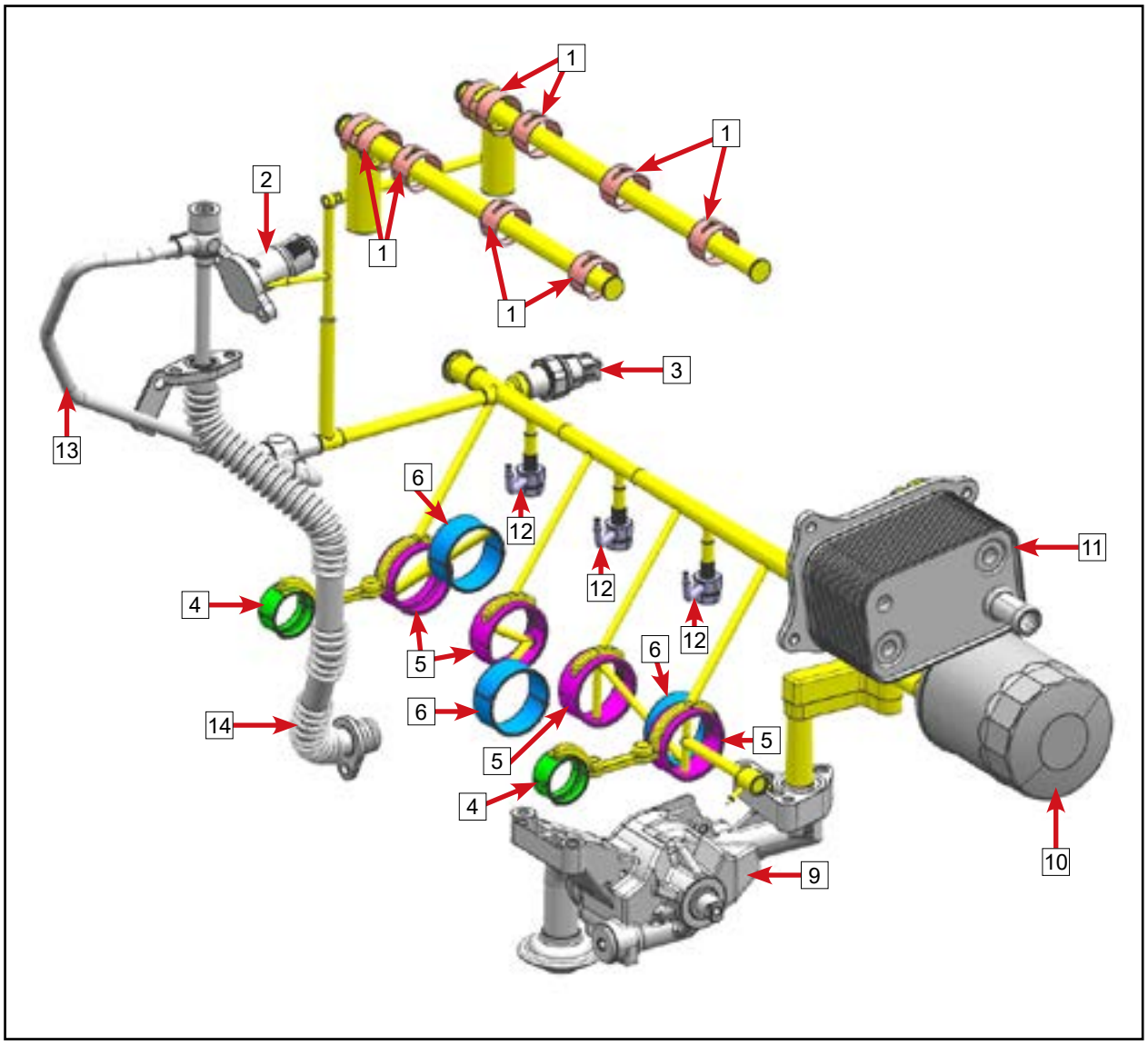

1: Camshaft bearing
2: Tensioner assembly
3: Oil pressure switch
4: Balance shaft plain bearing
5: Main plain bearing
6: Connecting rod plain bearing
7: Oil suction filter assembly
8: Oil pressure regulating valve
9: Oil pump
10: Oil filter
11: Oil cooler
12: Piston cooling nozzle
13 : Turbocharger oil inlet pipe
14 : Turbocharger oil return pipe

© CFMOTO Powersports, Inc. This manual is subject to all applicable copyright laws. Reproduction or duplication in any form, whole or in part, is strictly prohibited.

5.8.2 Engine Oil Level Inspection

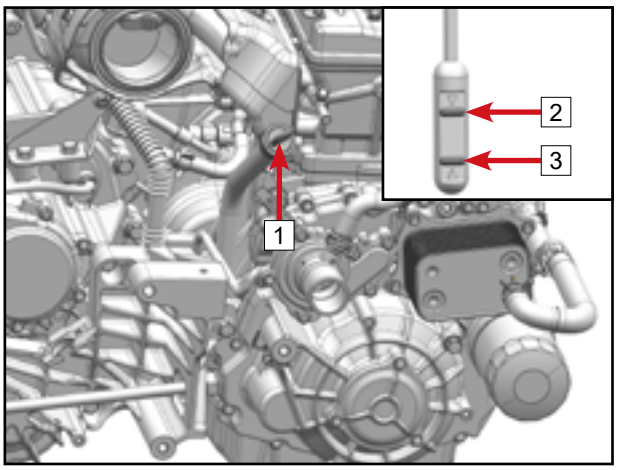

Ensure vehicle is on a level surface.
Start the engine and allow it to idle for a few minutes.
Stop the engine and wait for a minute to allow oil to settle, then inspect the oil level.
Remove the dipstick [1] and wipe away the oil.
Fully insert the dipstick into the tube and remove it, then read the oil level.
Verify the level is between upper [2] and lower [3] marks.

NOTE
The oil volume between the upper and lower marks is approximately 400 mL.

Add or drain engine oil until the level is suitable.
Install the oil dipstick.

NOTE
Strictly follow the procedures above to avoid a wrong oil level indication.

5.8.3 Engine Oil Replacement

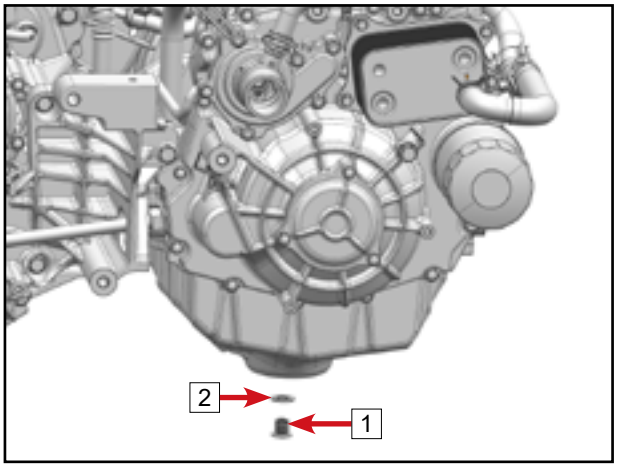

NOTE
Change oil only when the engine temperature has cooled sufficiently. The oil and oil filter should be replaced at the same time when the engine is warm.

Ensure vehicle is on a level surface.
Clean the drain bolt area.
Place a pan under the engine oil drain bolt to collect the drained oil.
Remove the drain bolt [1] and washer [2].
Wait several minutes for the oil to drain completely from the engine.

NOTE
Oil condition reflects engine condition. Check the engine oil for metal shavings or heavy residue. Presence of a small amount of fine particles is considered normal wear. Presence of heavy debris indicates a potential failure inside the engine, which should be investigated.

© CFMOTO Powersports, Inc. This manual is subject to all applicable copyright laws. Reproduction or duplication in any form, whole or in part, is strictly prohbited.

Clean the drain bolt, then reinstall it with a new seal washer and torque to specification.

Magnetic Drain Bolt (Engine Oil)	
Torque	25 N•m (18.4 ft-lb.)

Oil Filter Replacement

Removal of the oil filter is described in the Engine Overhaul section.
Installation of the oil filter is described in the Engine Assembly section.

Engine Oil Filling

Remove the dipstick.
Through the dipstick tube, fill the engine with the recommended amount of oil.

Oil Capacity (replace oil and filter at the same time)	
Capacity	3.8 L
Oil type	SAE 5W-40, API SP or higher, synthetic oil

Install the dipstick, start the engine and make sure that there is no oil leakage from the oil filter or the magnetic oil drain bolt.
Afer filling the oil, check the oil level (Refer to section 5.8.2).

5.8.4 Gear Oil Level Inspection

Make sure the vehicle is on level ground.
Start the engine and let it run at idle for a few minutes.
Turn off the engine and allow the gear oil to settle, then check the oil level.
Observe the oil window 1, the oil level should remain between the upper 2 and lower 3 mark.
Remove the fill plug to add or drain gear oil until there is proper amount, then reinstall the fill plug.

NOTE
Strictly follow the procedures above to avoid a wrong oil level indication.

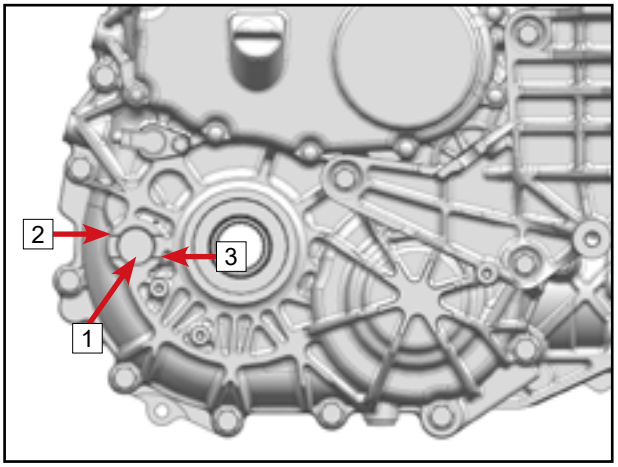

© CFMOTO Powersports, Inc. This manual is subject to all applicable copyright laws. Reproduction or duplication in any form, whole or in part, is strictly prohibited.

5.8.5 Gear Oil Replacement

NOTE
The gear oil should be replaced when the gearbox temperature has cooled sufficiently. The gear oil should be replaced in a warm state.

NOTE
Before change gear oil, the fill plug must be removed to release pressure in the gear box and avoid the gear oil ejection.

Make sure the vehicle is on level ground.
Remove the fill plug 1.
Wipe the area where the magnetic drain bolt is located.
Place a pan under the drain bolt to collect the drained oil.
Remove the magnetic drain bolt 2 and sealing washer 3.
Wait a few minutes for all the gear oil to drain out of the gearbox.

NOTE
Oil condition reflects gearbox condition. Check the gear oil for metal shavings or heavy residue. Presence of a small amount of fine particles is considered normal wear. Presence of heavy debris indicates a potential failure inside the gearbox, which should be investigated.

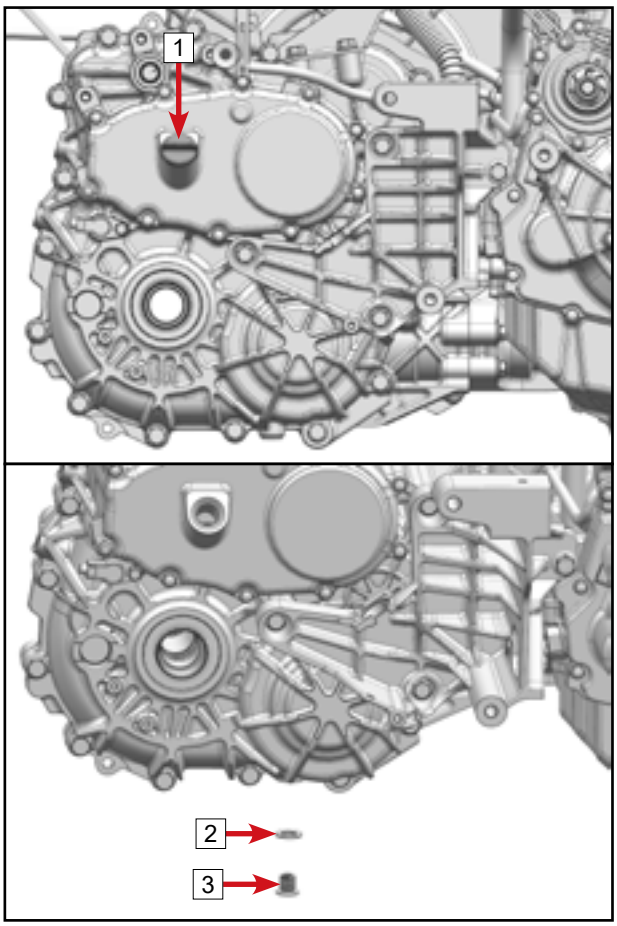

Gear Oil Filling

Clean the drain bolt, then reinstall it with a new sealing washer and torque to specification.

Magnetic Drain Bolt (Gear Oil)	
Torque	25 N•m (18.4 ft-lb.)

Fill the gearbox with the recommended gear oil from the plug mounting hole.

Gear oil Capacity	
Capacity	3.0 L
Gear oil type	SAE 75W/90-GL5

Reinstall the fill plug, start the engine and make sure that there is no gear oil leakage from the magnetic drain bolt area.
After filling the gear oil, check the gear oil level (Refer to section 5.8.4).

© CFMOTO Powersports, Inc. This manual is subject to all applicable copyright laws. Reproduction or duplication in any form, whole or in part, is strictly prohbited.

5.8.6 Engine Oil Pressure Inspection

NOTE
The engine oil pressure should be checked with the recommended oil and the engine at operating temperature (oil temperature about 90°C).

Remove the oil pressure switch.
Install case oil hole connector 1 and an oil pressure gauge 2.

Case Oil Hole Connector
(See section 5.1 for details.)

Start and run the engine until the temperature reaches the required test temperature.

With the engine at operating temperature, oil pressure (at 90°C) should be within the following values:

Engine Speed/RPM	Oil Pressure/kPa
1200	> 100
4000	≥380

If the engine oil pressure is beyond specification, locate the problematic parts by engine trouble diagnosis.
Remove engine oil pressure gauge and oil hose joint after testing.
Reinstall the engine oil pressure switch.

Oil Pressure Switch	
Torque	20 N•m (14.7 ft-lb.)

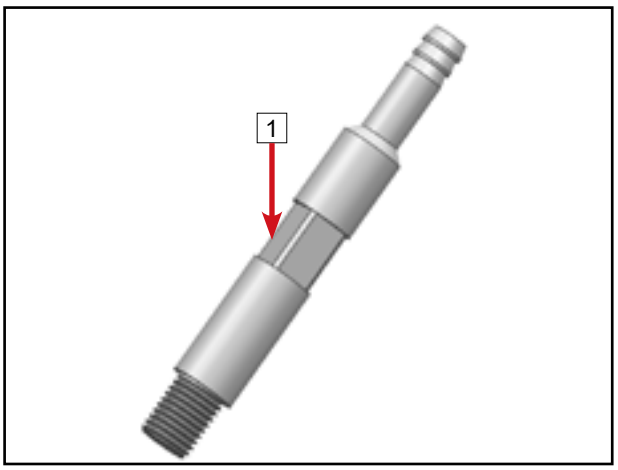

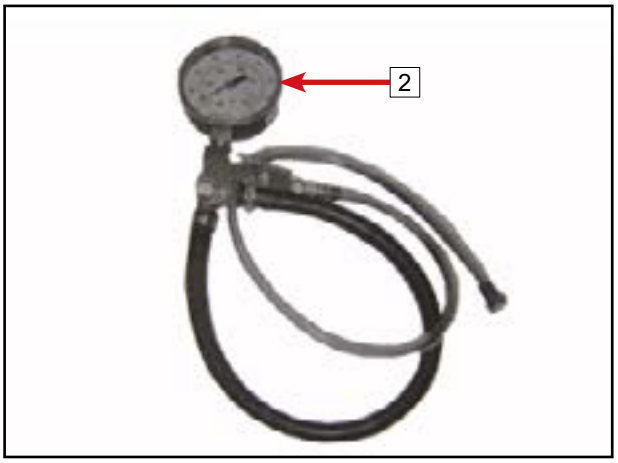

© CFMOTO Powersports, Inc. This manual is subject to all applicable copyright laws. Reproduction or duplication in any form, whole or in part, is strictly prohbited.

5.9 Air Intake System

5.9.1 Air Filter Element Maintenance

NOTE
If the vehicle is used in severe conditions, increase the frequency of air filter inspections and maintenance (refer to Maintenance Chart).

Removal

Refer to Chapter 06 for removal:
- Driver seat (Z10) or the rear row LH seat (Z10-4)
- Air filter service cover

Release the clamps 1.
Remove the air filter upper housing 2.

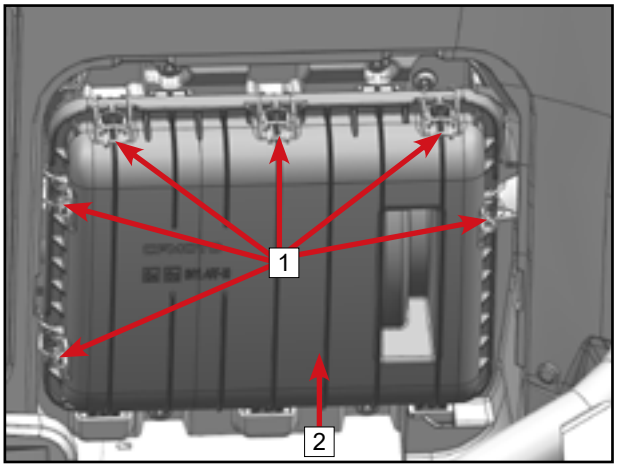

Remove air filter seal ring 1.
Remove air filter element 2.

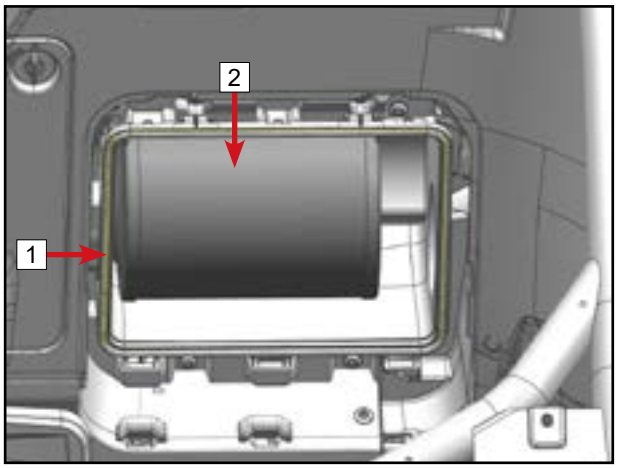

Inspection

Check the upper housing 1 of the air filter for cracks or other damage. If damaged, replace it.
Clean air filter upper housing.

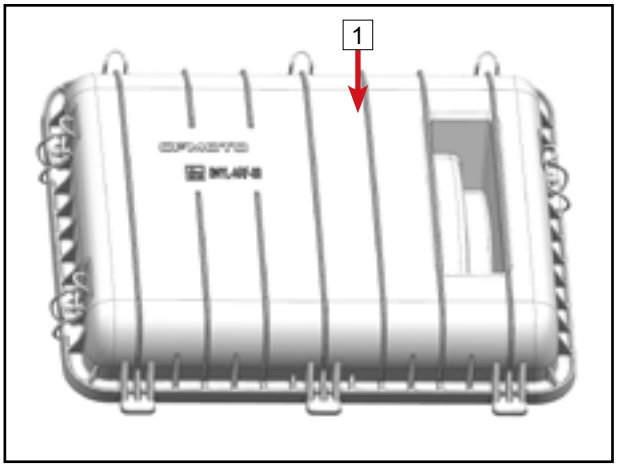

© CFMOTO Powersports, Inc. This manual is subject to all applicable copyright laws. Reproduction or duplication in any form, whole or in part, is strictly prohbited.

Check for a cracked, hardened or otherwise damaged air filter seal ring 1. If damaged, replace it.

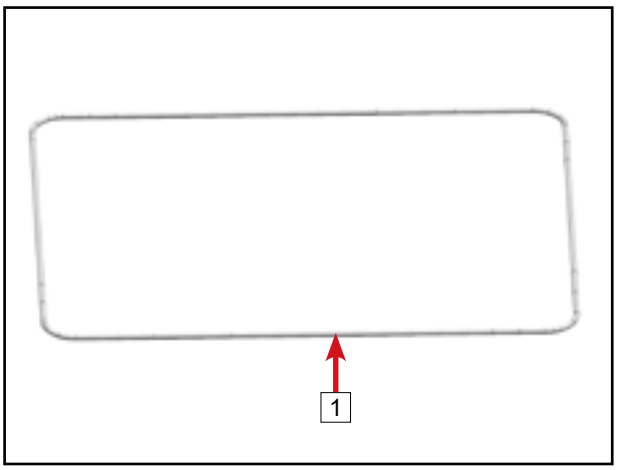

Clean the air filter lower housing 1.

NOTE
If sand or other particles are found in the lower housing of the air filter, clean it with a vacuum cleaner.

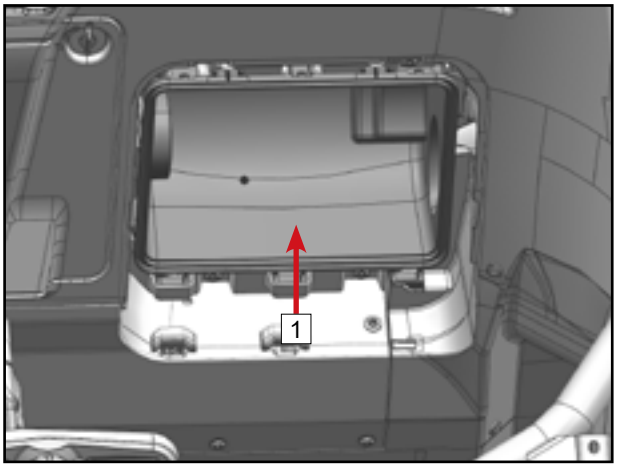

Check the air filter element 1 to determine if it needs to be replaced. If not, clean the element. Flick out any heavy buildup of dust from the element.

NOTE
Do not use compressed air to blow out the paper element. When used in dusty environments, this may damage the fibers and reduce its filtration capacity. If the air filter element becomes dirty, replace it.

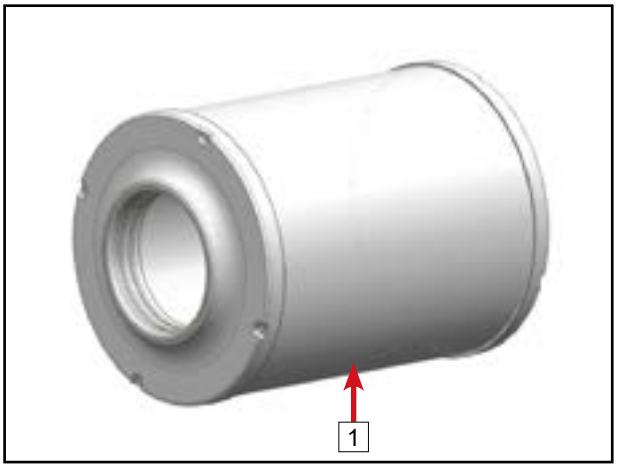

Installation

Install air filter element 2.

Install air filter seal ring 1.

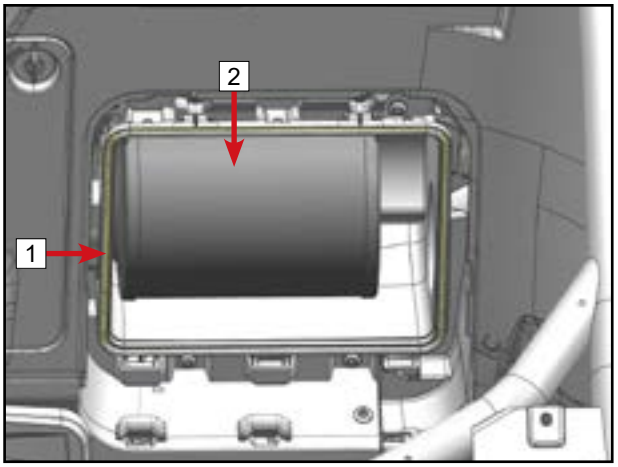

© CFMOTO Powersports, Inc. This manual is subject to all applicable copyright laws. Reproduction or duplication in any form, whole or in part, is strictly prohibited.

Install air filter upper housing 2.
Fasten the snaps 1.

Refer to the Vehicle and Body Panels section for installation:
- Air filter service cover
- Driver seat (Z10) or the rear row LH seat (Z10-4)

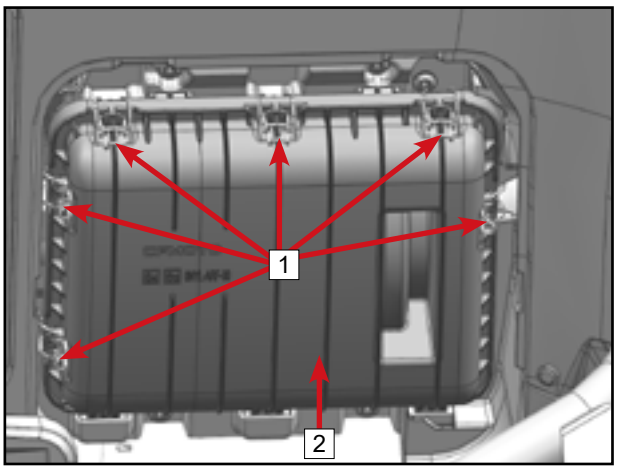

5.9.2 Air Filter Housing Assembly

5.9.2.1 Removal

Refer to the Vehicle and Body Panels section for removal:
- Seats (Z10) or the rear row seats (Z10-4)
- Air filter service cover
- Bolts 1 holding the air filter housing assembly in place
- Related body panels

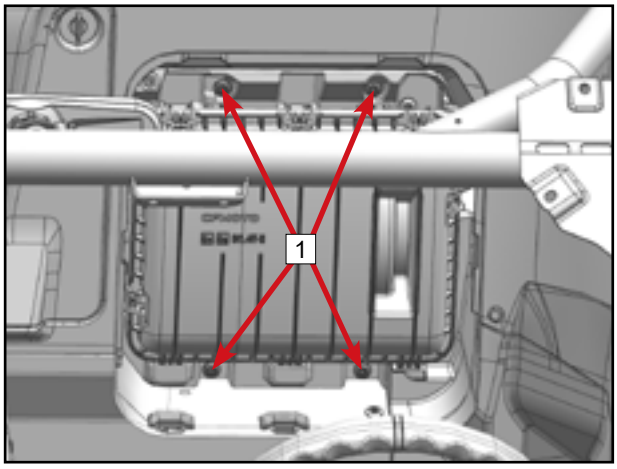

Release clamp 1.
Remove bolt 2 and 3.
Remove the air filter inlet pipe assembly 4.

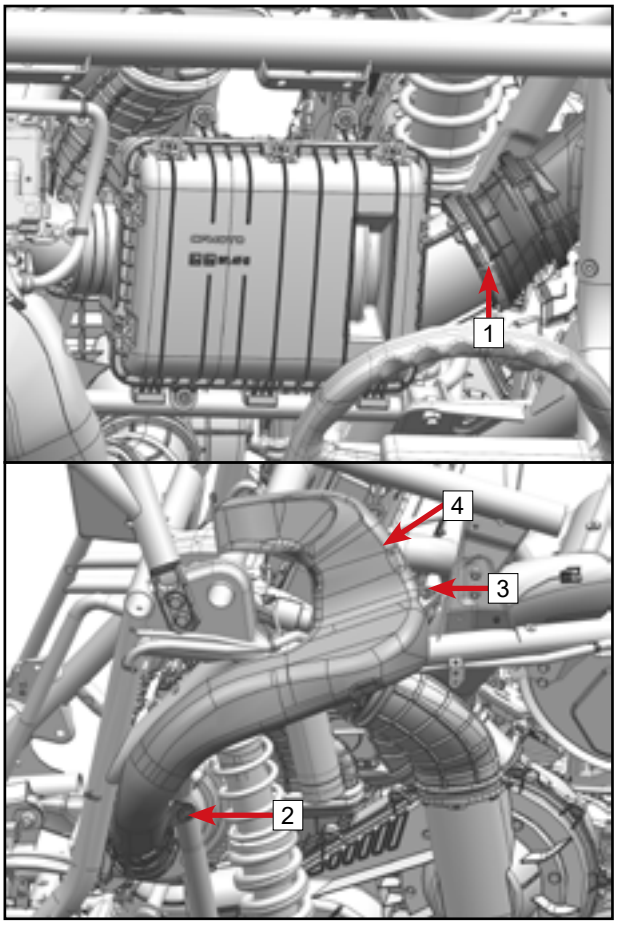

© CFMOTO Powersports, Inc. This manual is subject to all applicable copyright laws. Reproduction or duplication in any form, whole or in part, is strictly prohibited.

Loosen the clamp 1.
Unplug the crankcase breather 2 from the oil/air separator.

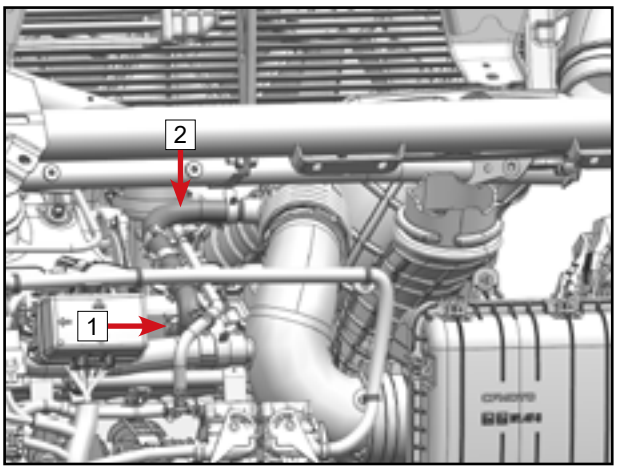

Loosen the clamp 1.
Remove the fuel vapor desorption hose VII 2 from the pipe joint.
Loosen the clamp 3.
Pull out the intake pressure relief valve outlet hose 4 from the air filter outlet pipe 1.
Separate the hose 4 from the clamp 5.

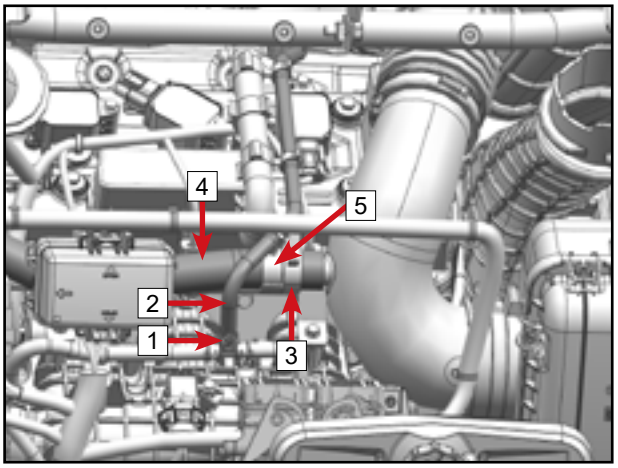

Loosen the clamp 1.
Unplug the air filter outlet pipe 2 2 from the turbocharger.
Remove the air filter housing assembly.

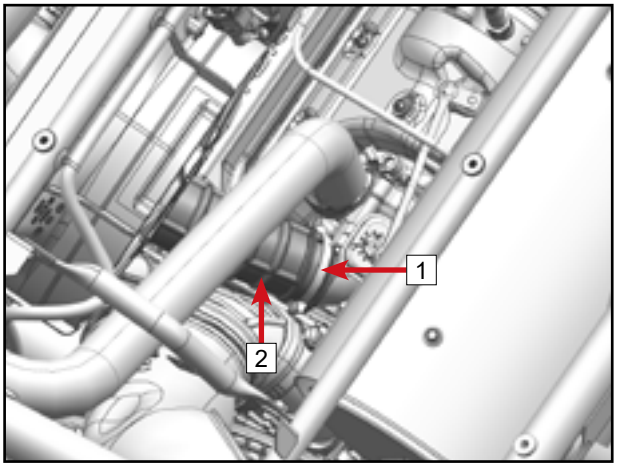

© CFMOTO Powersports, Inc. This manual is subject to all applicable copyright laws. Reproduction or duplication in any form, whole or in part, is strictly prohibited.

Air Filter Housing Assembly

Disassembly

Release clamp 1.
Remove air filter air outlet pipe assembly 2.

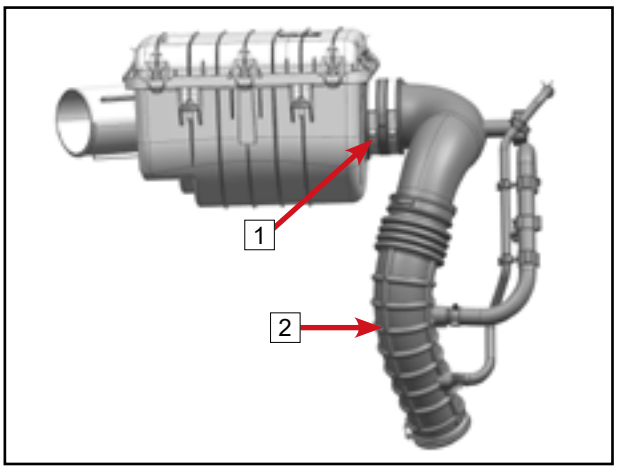

Release clamps 1.
Remove air filter upper housing assembly 2.

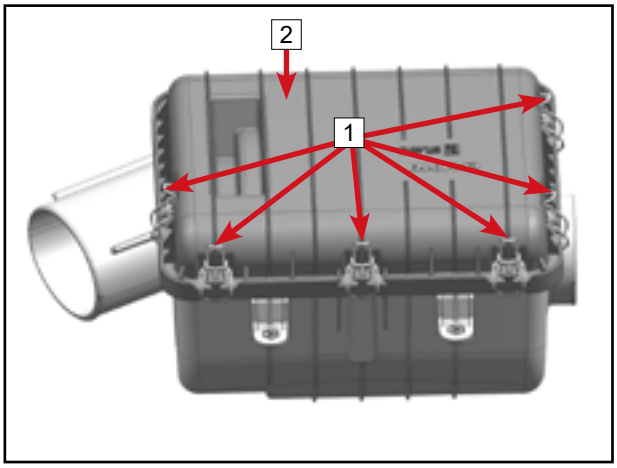

Remove air filter seal ring 1.

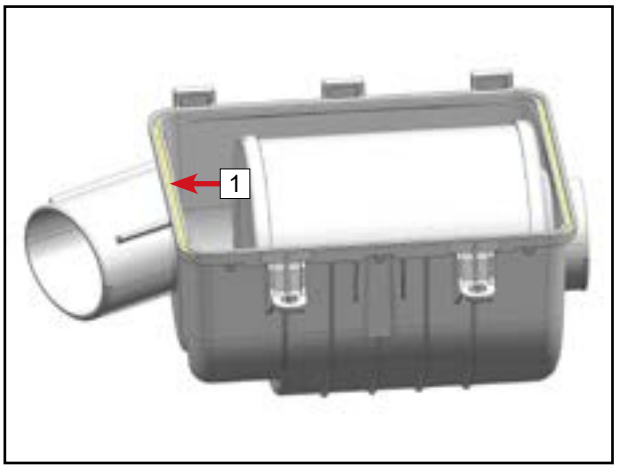

Remove air filter element 1.

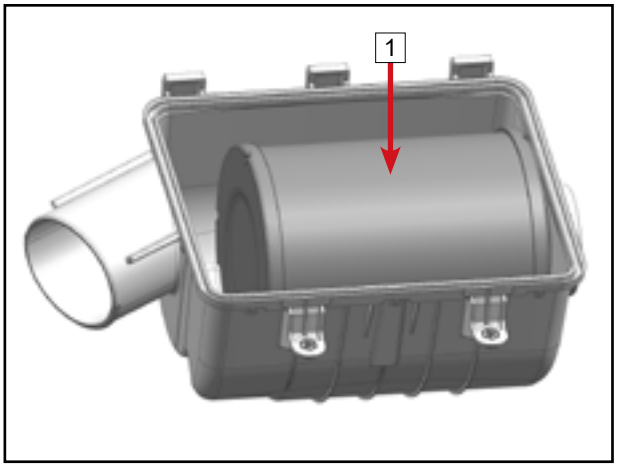

© CFMOTO Powersports, Inc. This manual is subject to all applicable copyright laws. Reproduction or duplication in any form, whole or in part, is strictly prohbited.

Release clamp 1.
Remove the duckbill valve 2 from the lower housing 3 of the air filter.

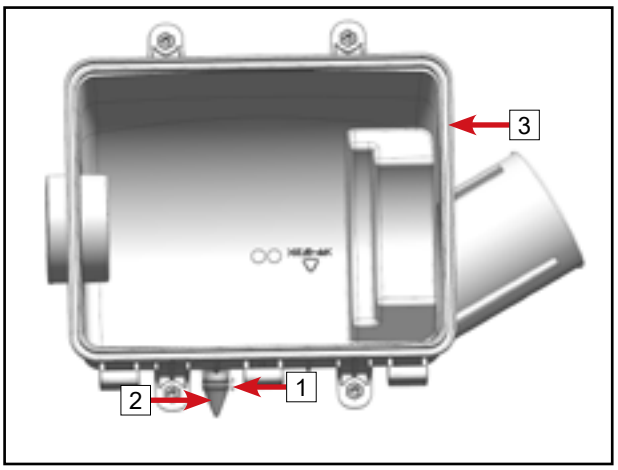

Air Filter Air Outlet Pipe Disassembly
Release clamp 1.
Remove the air filter outlet pipe connector 2 from the air filter outlet pipe 1 3.

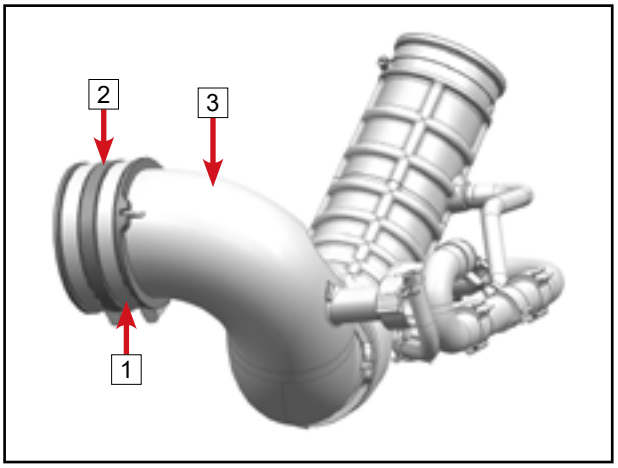

Release clamp 1.
Remove the crankcase breather 2 from the air filter outlet pipe 2 3.
Release clamp 4.
Remove the fuel vapor desorption hose Ⅶ 5 from the air filter outlet pipe 2 3.

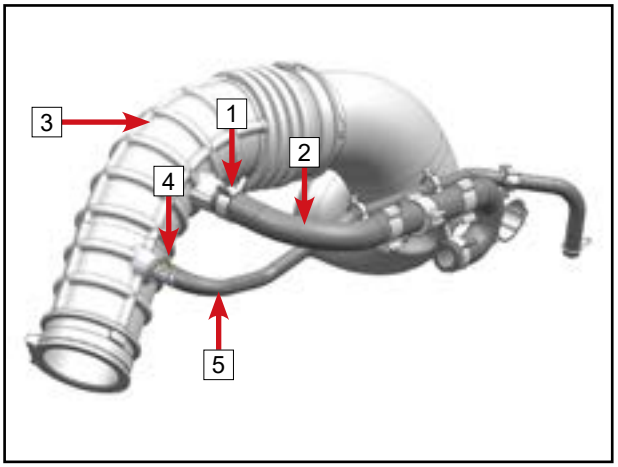

Release clamp 1.
Remove air filter outlet pipe 2 2 from air filter outlet pipe 1 3.

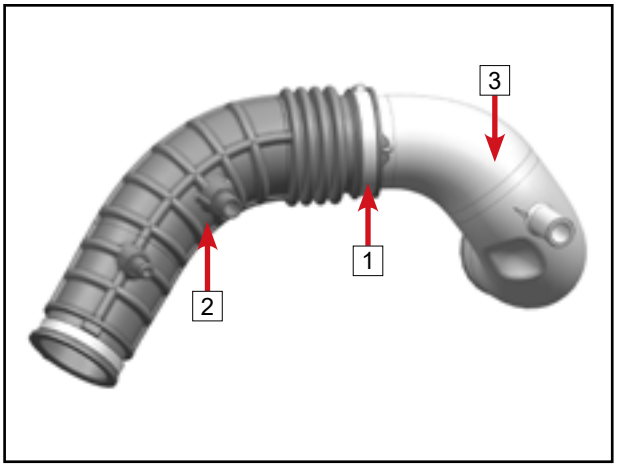

© CFMOTO Powersports, Inc. This manual is subject to all applicable copyright laws. Reproduction or duplication in any form, whole or in part, is strictly prohibited.

Separate the crankcase breather [1] from the clamps [2].

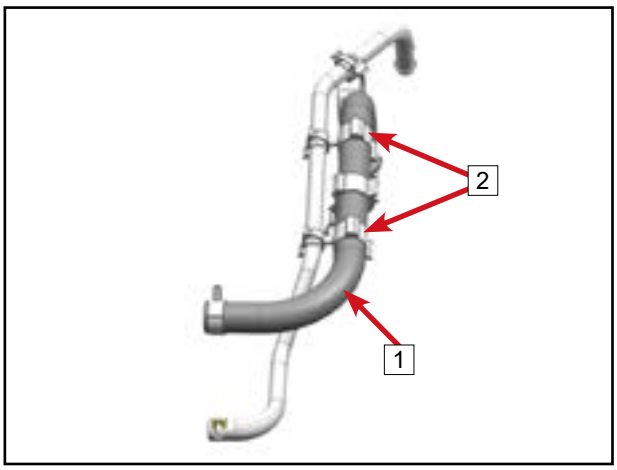

Air Filter Inlet Pipe Disassembly

Release clamp [1].

Remove the air filter inlet pipe connector [2] from the air filter inlet pipe [3].

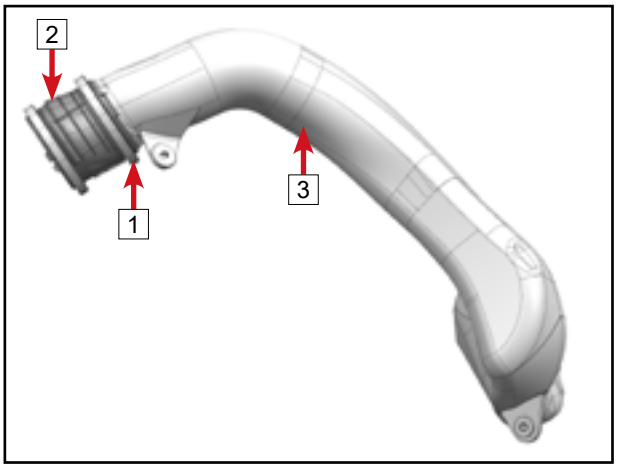

Remove bushing [1] and buffer [2] from air filter inlet pipe [3].

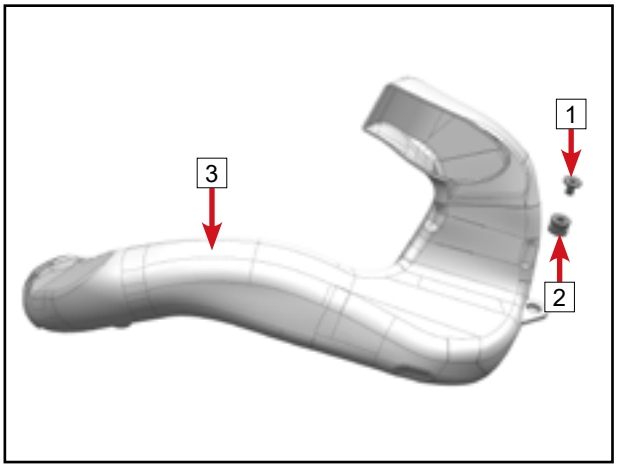

© CFMOTO Powersports, Inc. This manual is subject to all applicable copyright laws. Reproduction or duplication in any form, whole or in part, is strictly prohibited.

5.9.2.2 Inspection
Air Filter Housing Assembly

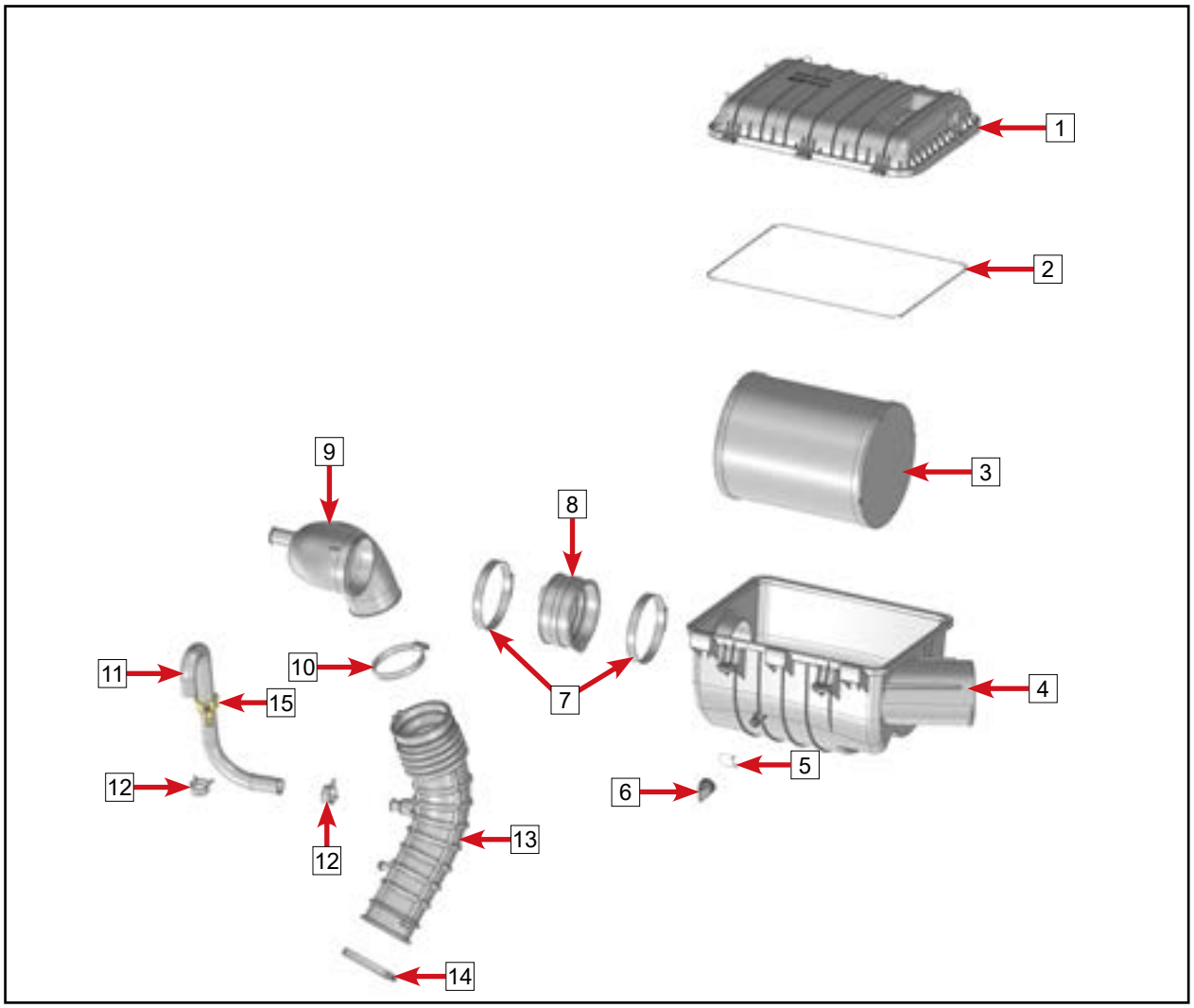

Number	Part Name	Number	Part Name
1	air filter upper housing assembly	9	air filter outlet pipe 1
2	air filter seal ring	10	clamp
3	air filter element	11	crankcase breather hose
4	air filter lower housing	12	clamp
5	clamp	13	air filter outlet pipe 2
6	duckbill valve	14	clamp
7	clamp	15	Pipe clamp
8	air filter outlet pipe connector		

Refer to the Air Filter Element Maintenance section for inspection of the air filter upper housing, air filter seal ring and air filter element.
Inspect the air filter lower housing for cracks or other damage. If damaged, replace with new parts.
Clean the air filter housing.
Check for cracked or otherwise damaged air filter outlet pipe 1 and 2. If damaged, replace with new parts.
Clean the air filter outlet pipe.
Check whether the air filter outlet pipe connector, crankcase breather and duckbill valve is aged or otherwise damaged. If yes, replace.

© CFMOTO Powersports, Inc. This manual is subject to all applicable copyright laws. Reproduction or duplication in any form, whole or in part, is strictly prohibited.

Air Filter Inlet Pipe Inspection

Check the buffer sleeve for deterioration or other damage. If damaged, replace it.

Check for cracked or otherwise damaged air filter air inlet pipe connector. If damaged, replace it.

Check air filter inlet pipe for cracks or other damage. If damaged, replace it.

Clean the air filter inlet pipe.

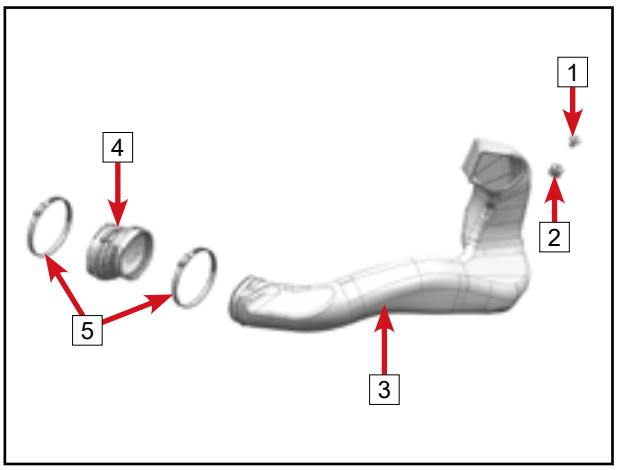

Number	Part Name
1	bushing
2	buffer sleeve
3	air filter inlet pipe
4	air filter inlet pipe connector
5	clamp

5.9.2.3 Installation

Air Filter Inlet Pipe Reassembly

Install the buffer sleeve 2 and bushing 1 to the air filter inlet pipe 3.

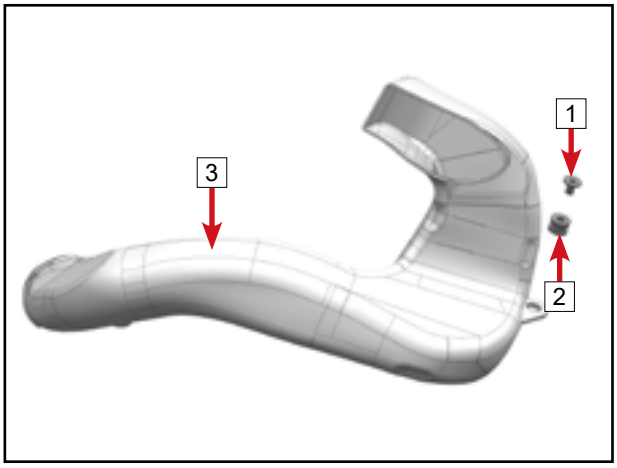

Fit the clamp 1 onto the air filter inlet pipe joint 2, install the air filter inlet pipe joint 2 onto the air filter inlet pipe 3, and make sure the protrusion A is clamped into the pipe groove.

Tighten the clamp 1 shown in the image.

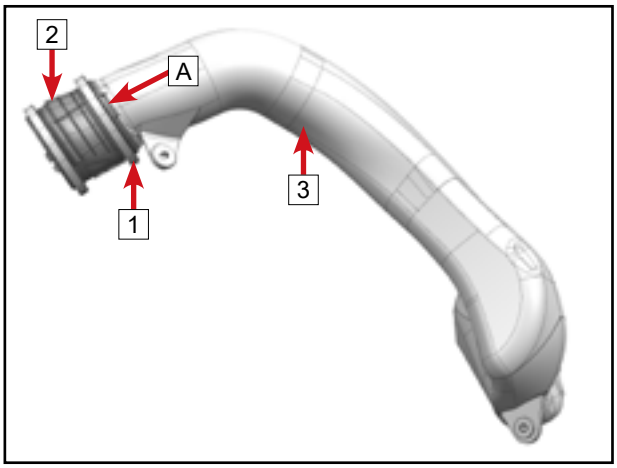

© CFMOTO Powersports, Inc. This manual is subject to all applicable copyright laws. Reproduction or duplication in any form, whole or in part, is strictly prohibited.

Air Filter Outlet Pipe Reassembly

Pass the crankcase breather pipe 1 through the pipe clamps 2.

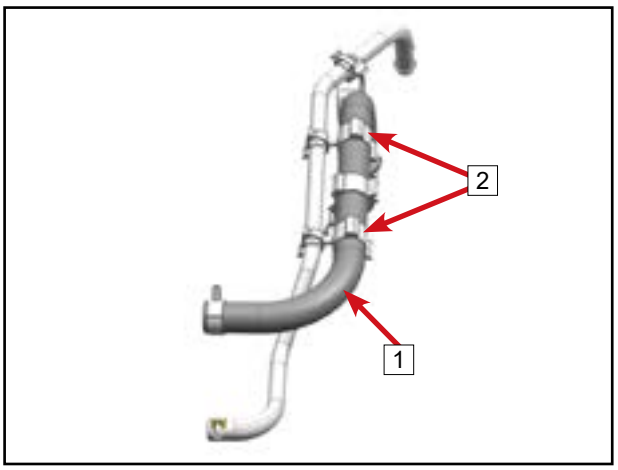

Install air filter outlet pipe 2 2 to air filter outlet pipe 1 3 by placing clamp 1 and clamp 4 over air filter outlet pipe 2 2.
Align tab A and slot B.
Tighten the clamp 1.

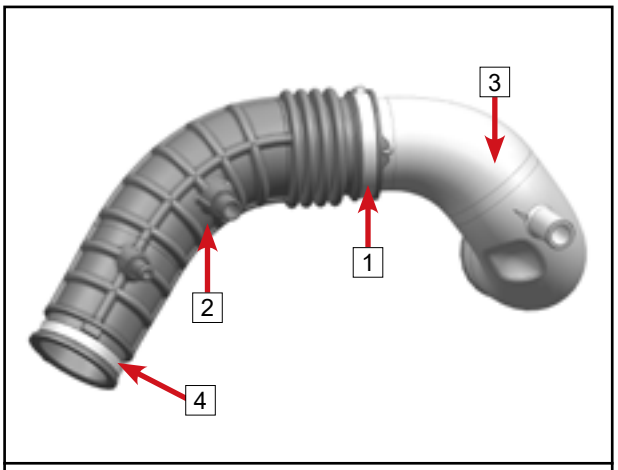

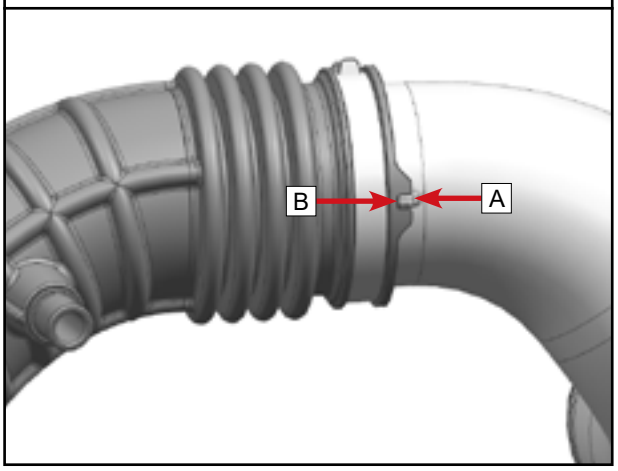

© CFMOTO Powersports, Inc. This manual is subject to all applicable copyright laws. Reproduction or duplication in any form, whole or in part, is strictly prohibited.

Install the crankcase breather [2] to the air filter outlet pipe 2 [3] by slipping the clamp [1] over the crankcase breather [2].
Align the mark [A] with the tab [B].
Tighten the clamp [1].
Fit the clamp [4] onto the fuel vapor desorption hose VII [5] and install the hose [5] onto the pipe [3].
The direction of the mark [C] is as shown in the image.
Tighten the clamp [4].

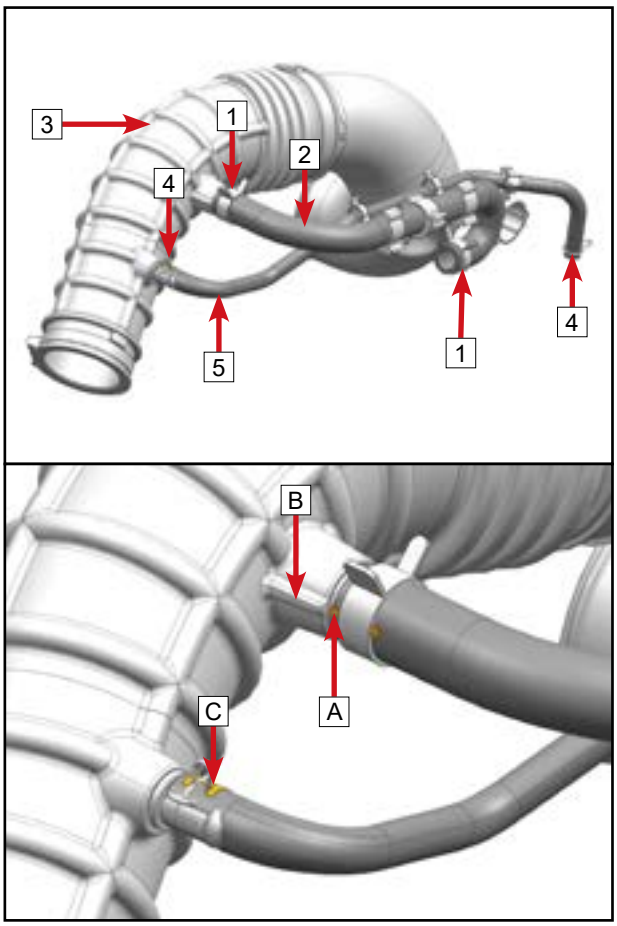

Install the air filter outlet pipe connector [2] onto the air filter outlet pipe 1 [3] by slipping the clamp [1] over the air filter outlet pipe connector [2].
Align the tab [A] with the slot [B].
Tighten the clamp [1] shown in the image.

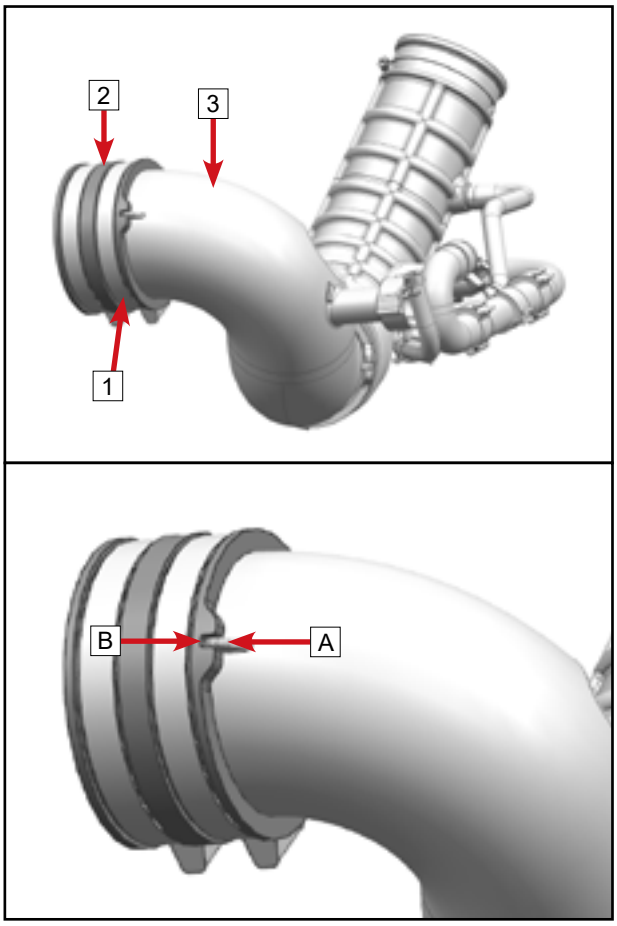

© CFMOTO Powersports, Inc. This manual is subject to all applicable copyright laws. Reproduction or duplication in any form, whole or in part, is strictly prohibited.

Assembling Air Filter Housing Assembly

Place the clamp 1 over the duckbill valve 2 and install the duckbill valve 2 onto the lower housing 3 of the air filter.
Tighten the clamp 1.

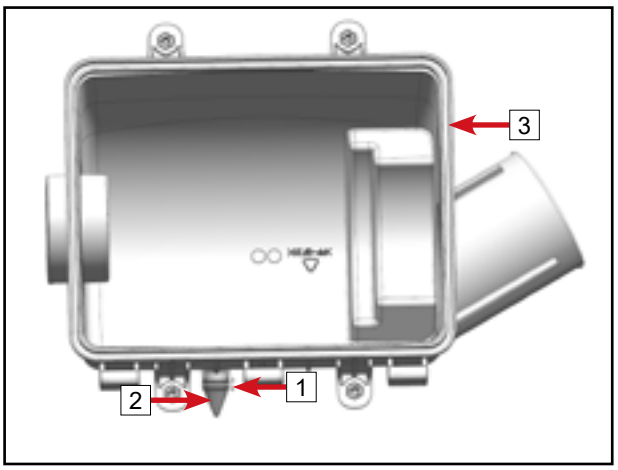

Install air filter element 1 in place.

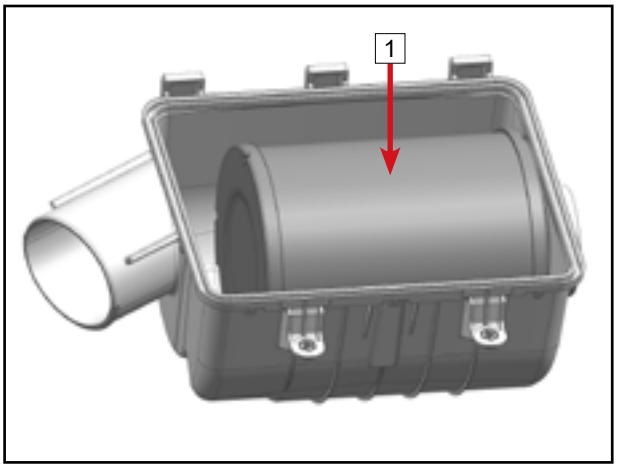

Install air filter seal ring 1 in place.

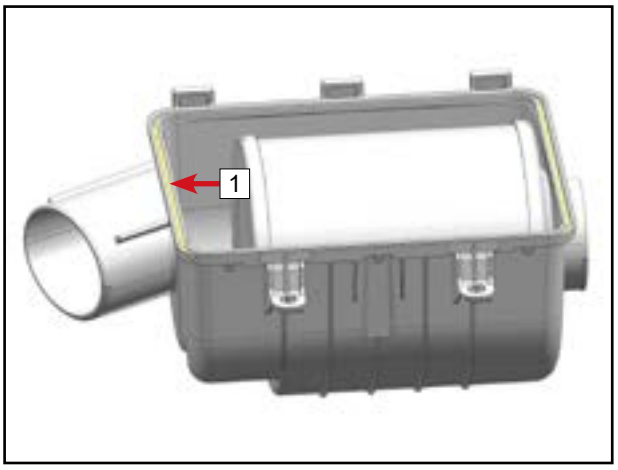

Install air filter upper housing assembly 2.
Clamp the fasteners 1.

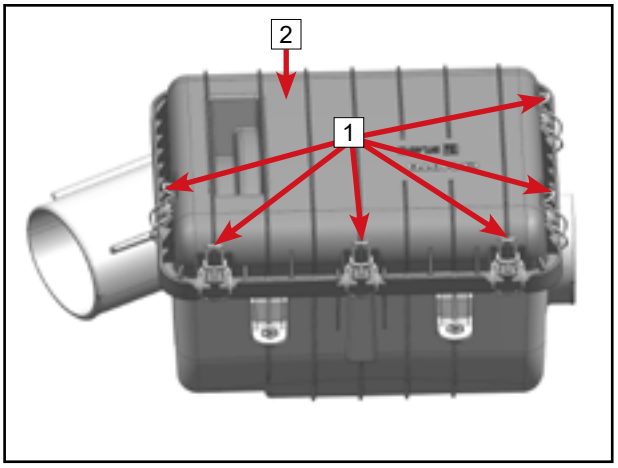

© CFMOTO Powersports, Inc. This manual is subject to all applicable copyright laws. Reproduction or duplication in any form, whole or in part, is strictly prohibited.

Install the air filter outlet pipe assembly [2] onto the lower housing of the air filter.
Align the tab [A] with the slot [B].
Tighten the clamp [1].

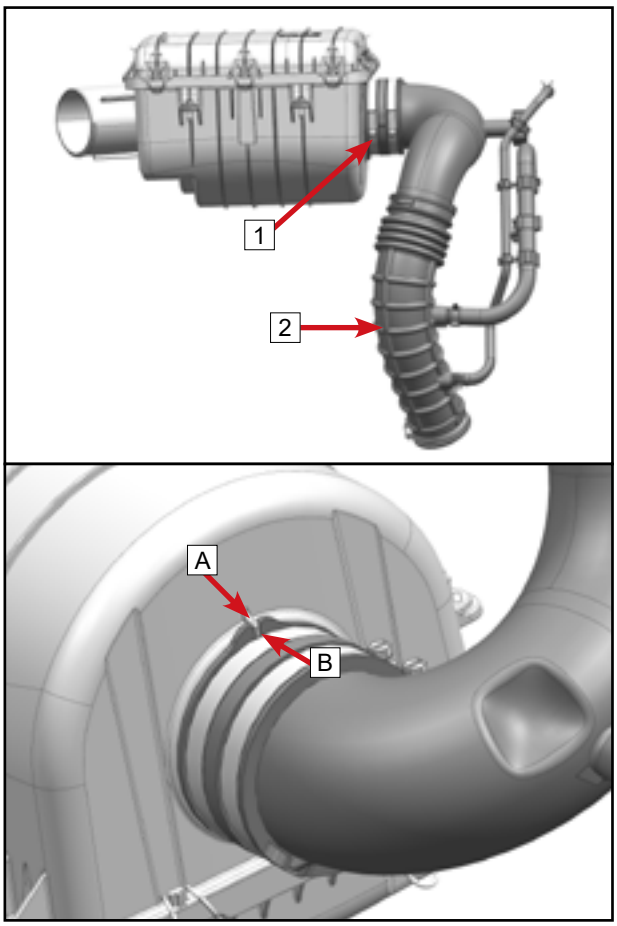

Air Filter Housing Assembly Installation

Install air filter housing assembly [1] in place.

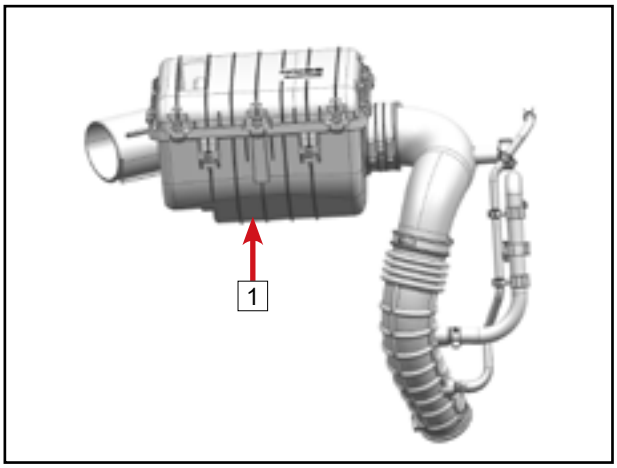

© CFMOTO Powersports, Inc. This manual is subject to all applicable copyright laws. Reproduction or duplication in any form, whole or in part, is strictly prohbited.

Install the air filter outlet pipe 2 [2] to the turbocharger.

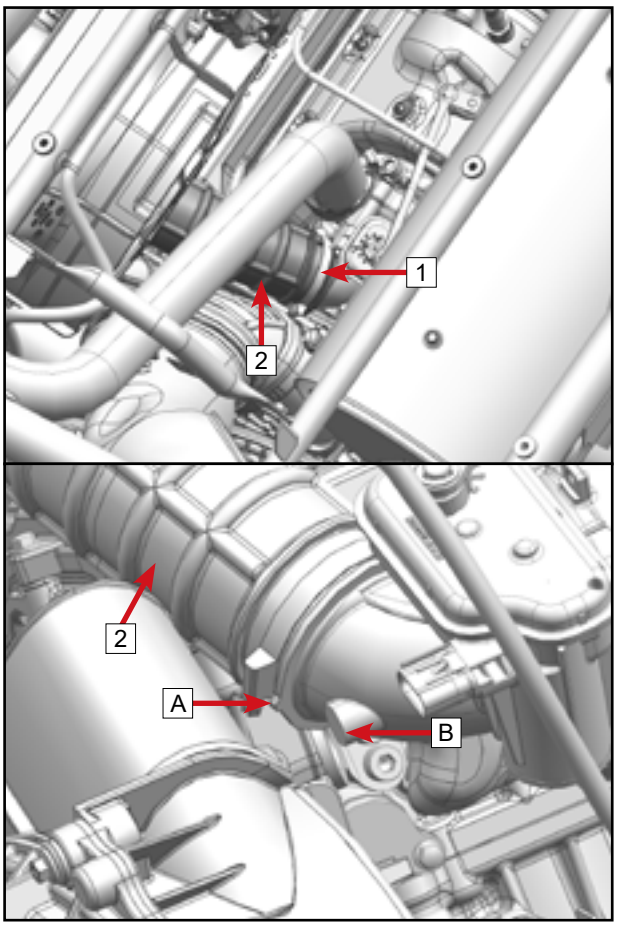

Ensure that boss [A] is aligned with tab [B].
Tighten the clamp [1].

Ensure that the intake pressure relief valve outlet hose [4] passes through the clamp [5].
Install the pipe [4] onto the air filter outlet pipe 1.
Tighten the clamp [3].
Install the fuel vapor desorption hose VII [2] to the pipe joint.
Tighten the clamp [1].

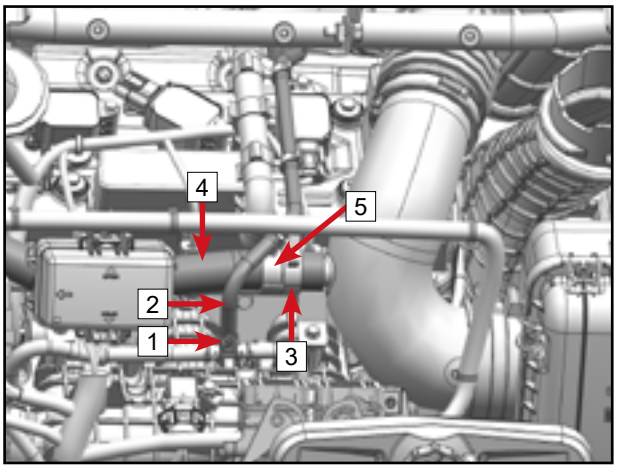

© CFMOTO Powersports, Inc. This manual is subject to all applicable copyright laws. Reproduction or duplication in any form, whole or in part, is strictly prohibited.

Install the air filter inlet pipe assembly [4] in place.
Ensure that the tab [A] is stuck into the slot [B].
Install bolt [2] and bolt [3] to fix the air filter inlet pipe assembly [4].
Tighten the clamp [1].

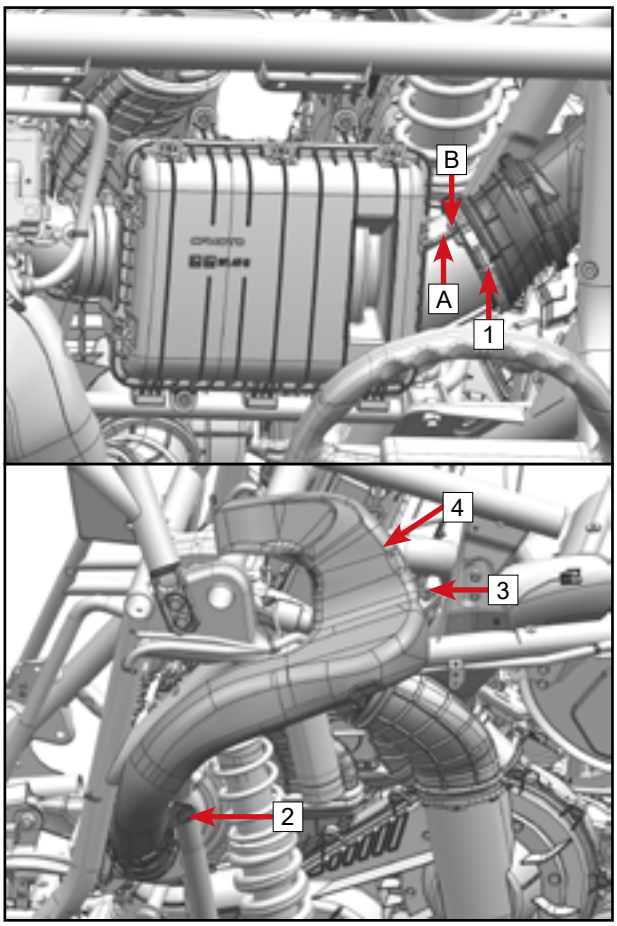

Refer to Chaper 06 for installation:
- Removed body panels
- Bolts [1] holding the air filter housing assembly in place
- Air filter service cover
- Seats (Z10) or the rear row seats (Z10-4)

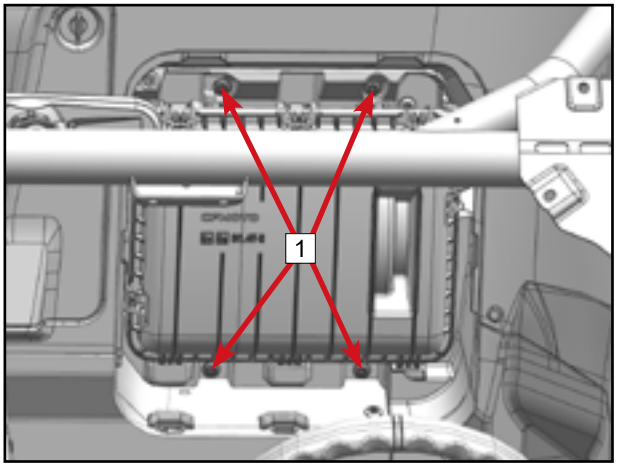

© CFMOTO Powersports, Inc. This manual is subject to all applicable copyright laws. Reproduction or duplication in any form, whole or in part, is strictly prohbited.

5.9.3 Intake Manifold

5.9.3.1 Intake Manifold Removal

Refer to Chapter 06 for removal:
- Seats (Z10) or the rear row seats (Z10-4)
- Relevant body panels

Loosen the clamp 1.
Unplug the tube 2 from the intake manifold.
Separate the tie band 3 from the bracket.

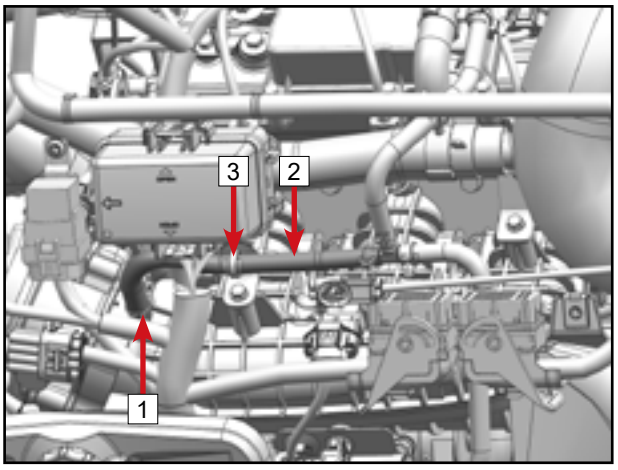

Disconnect the EVAP canister magnetic valve connector 1.
Unplug the EVAP canister magnetic valve 2 from the bracket.
Disconnect the boost pressure temperature sensor connector 3.
Separate the tie band 4 from the bracket.
Remove fuel pipe 5 from fuel rail.
Separate the tie band 6 and 7 from the bracket.
Separate the tie band 8 and 9 from the intake manifold.

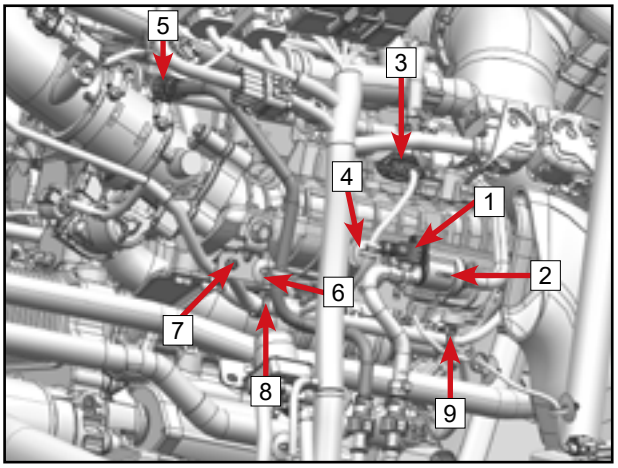

Disconnect the fuel injector connectors 1.

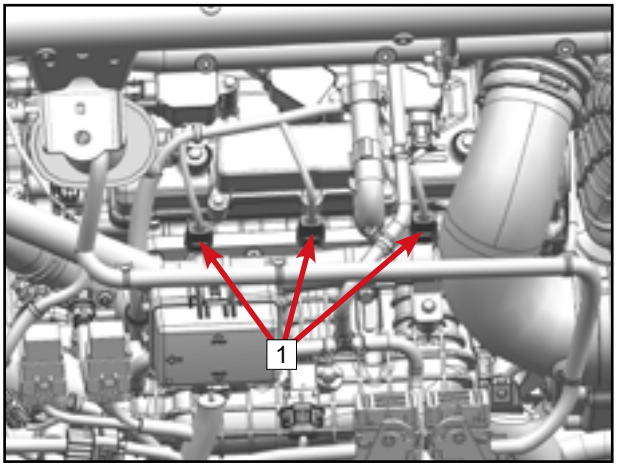

© CFMOTO Powersports, Inc. This manual is subject to all applicable copyright laws. Reproduction or duplication in any form, whole or in part, is strictly prohbited.

Remove the bolt [1], separate the intake pressure relief valve air outlet hose [2] from the bracket.

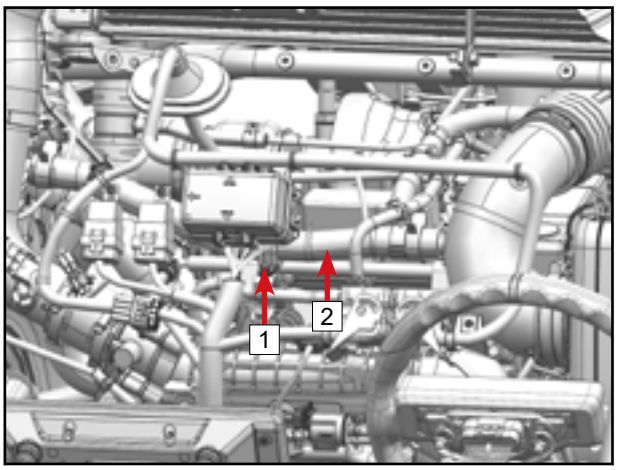

Separate the tie band [1] from the intake manifold.

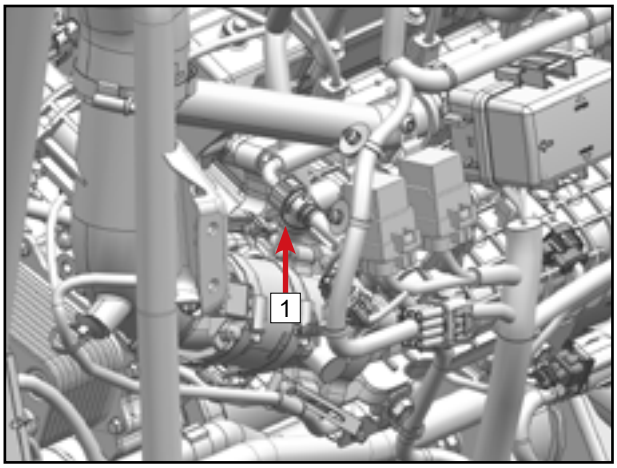

Disconnect the throttle body connector [1].
Releasethe clamp [2].
Remove the throttle body connecting pipe [3] from the throttle valve body.

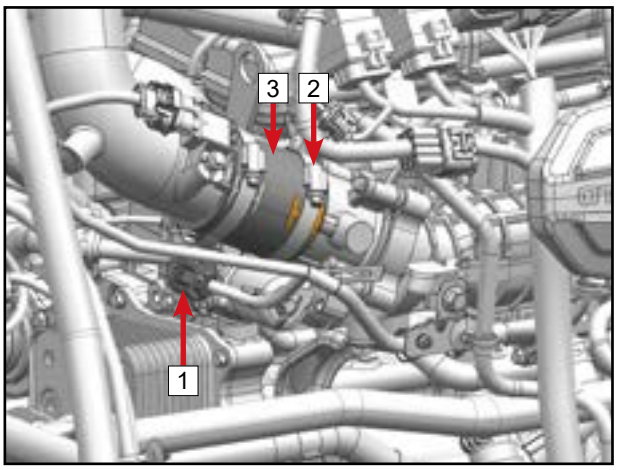

Remove bolts [1].
Remove the intake manifold bracket [2].

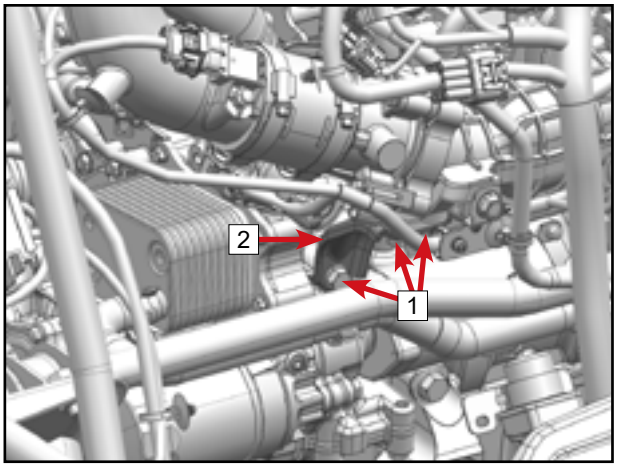

© CFMOTO Powersports, Inc. This manual is subject to all applicable copyright laws. Reproduction or duplication in any form, whole or in part, is strictly prohibited.

Remove bolts 1.
Remove the intake manifold assembly 2 from the engine.

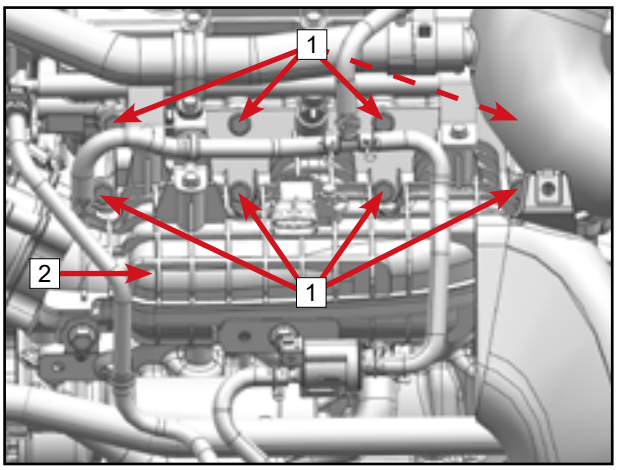

5.9.3.2 Intake Manifold Disassembly

Remove bolt 1.
Remove bracket 2.
Remove bolt 3.
Remove bracket 4.
Remove bolt 5.
Remove bracket 6.

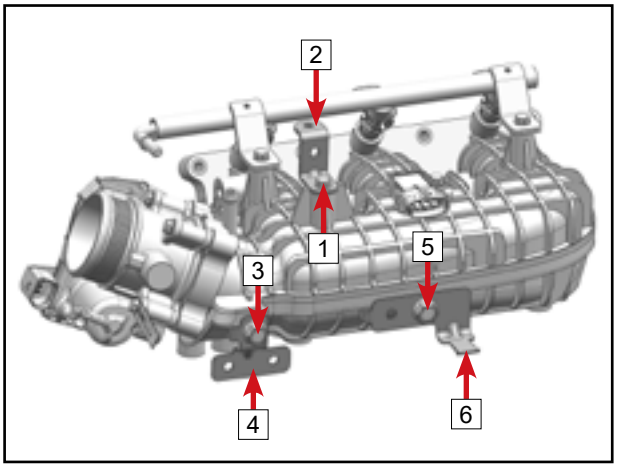

Remove bolt 1.
Remove the boost pressure sensor 2.

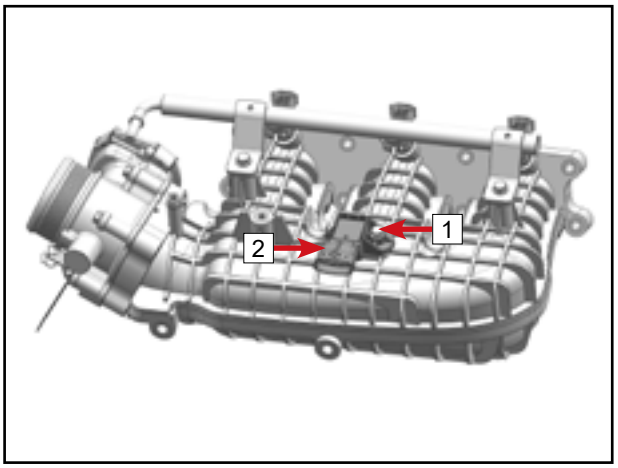

Remove bolts 1.
Remove fuel pipe assembly 2.

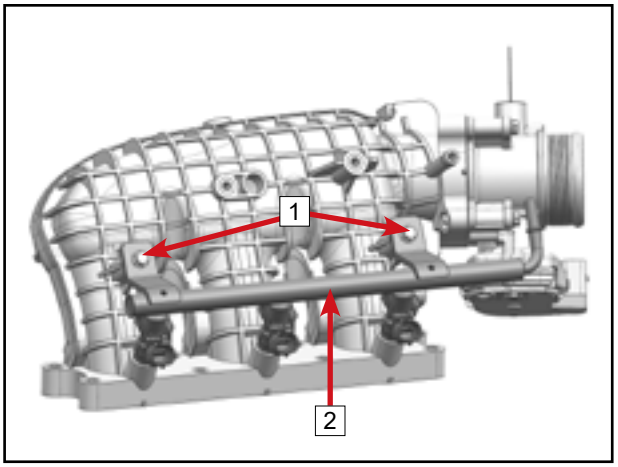

© CFMOTO Powersports, Inc. This manual is subject to all applicable copyright laws. Reproduction or duplication in any form, whole or in part, is strictly prohibited.

Cross-diagonally loosen the bolts [1] then remove them.
Remove the clamp [2].
Remove E-throttle body assembly [3].

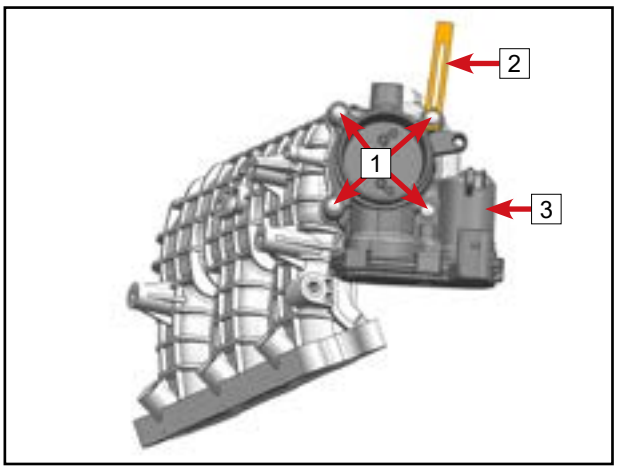

Remove throttle seal ring [1].

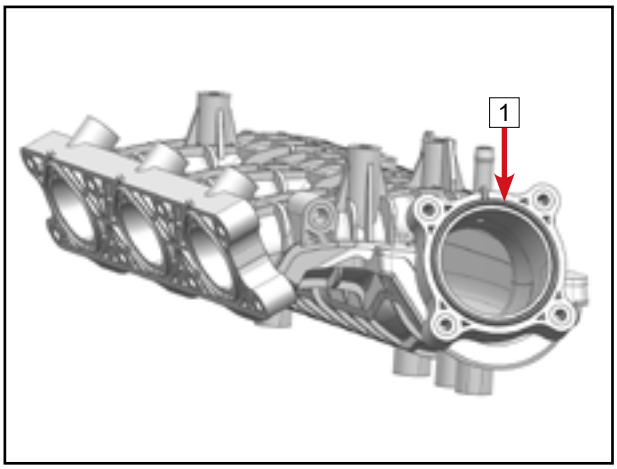

Remove the flange seal rings [1].

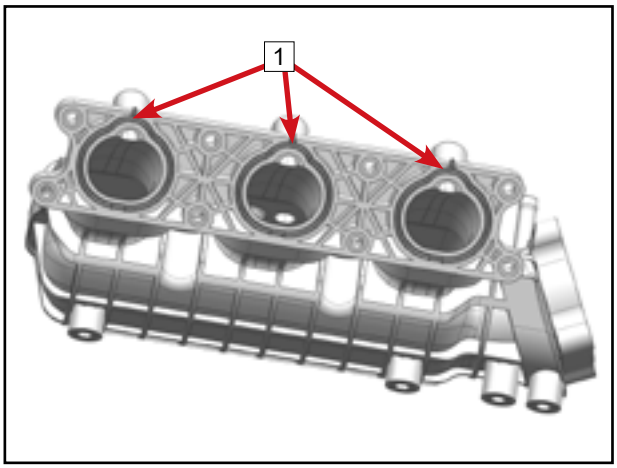

© CFMOTO Powersports, Inc. This manual is subject to all applicable copyright laws. Reproduction or duplication in any form, whole or in part, is strictly prohbited.

5.9.3.3 Inspection and Maintenance

Check flange seals [1] and throttle seal [2] for cracks, brittleness or hardening. If damaged, replace with new ones.

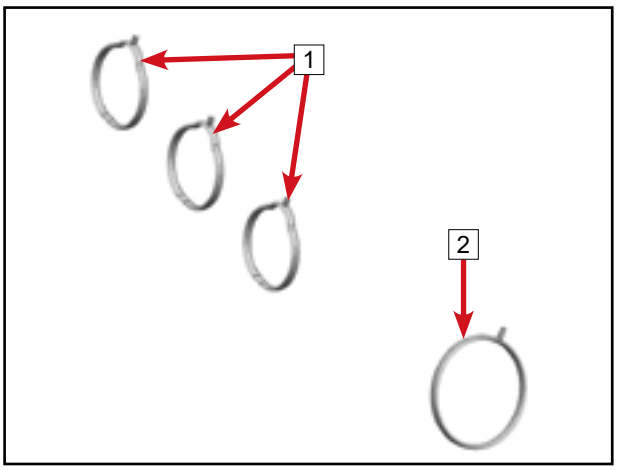

Check the intake manifold [1] for cracks, flange warping, or any other obvious damage. Replace if necessary.

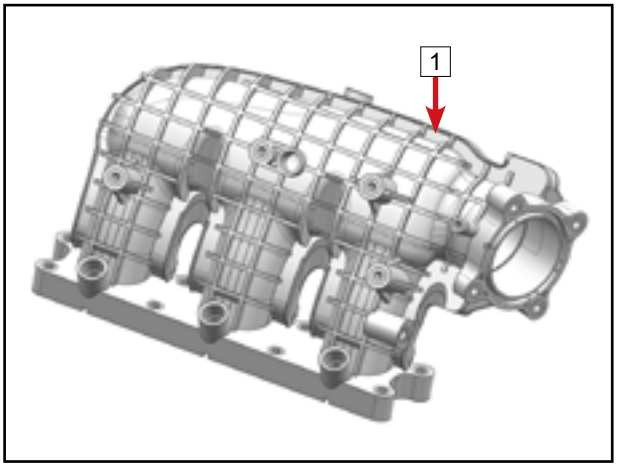

Check the electronic throttle assembly [1], boost pressure and temperature sensor [2] for damage. If damaged, replace them. (Sensor service is detailed in Chapter 12)

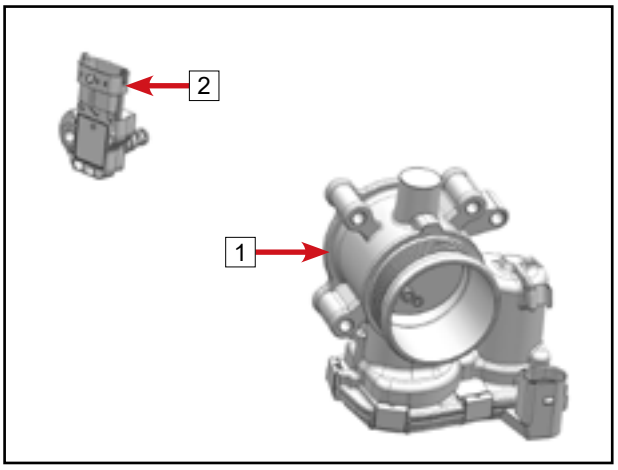

Fuel Pipe Assembly

Disassembly

Remove the circlips [1].

Separate the fuel rail [2] from the injectors [3] (Injector service is detailed in Chapter12).

Assembly

Install the injectors [3] onto the fuel rail [2], then install the circlips [1].

The tab of the injector cap must be seated in the slot of the circlip [1].

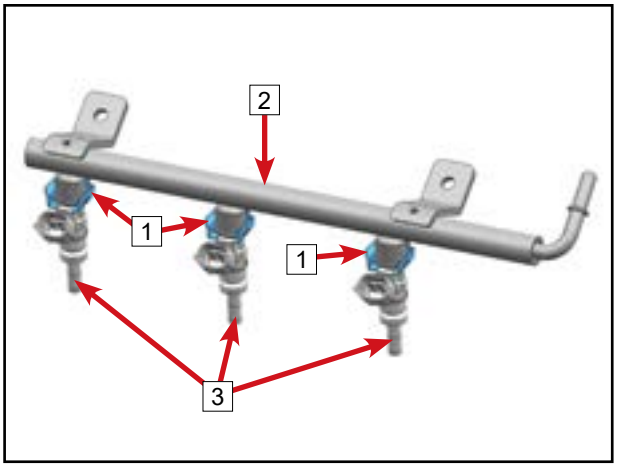

© CFMOTO Powersports, Inc. This manual is subject to all applicable copyright laws. Reproduction or duplication in any form, whole or in part, is strictly prohibited.

5.9.3.4 Intake Manifold Reassembly

Install flange seals [1] on the intake manifold.

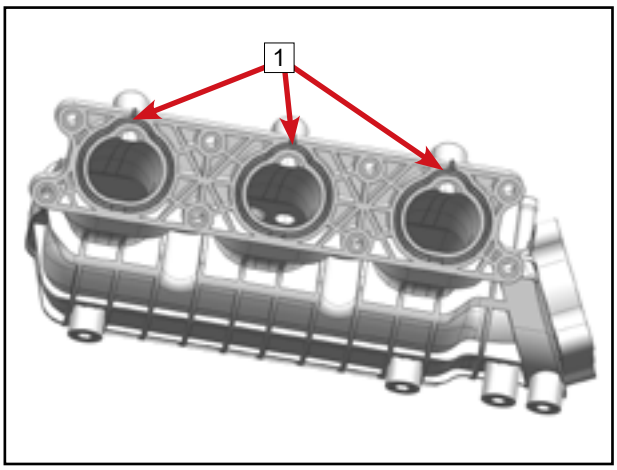

Install throttle body seal [1] on the intake manifold.

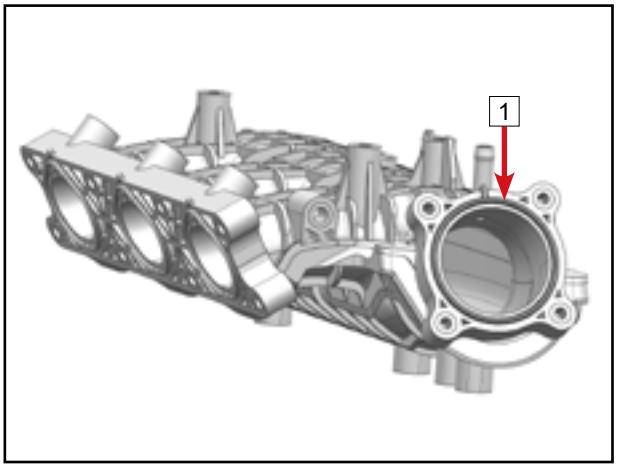

Place the electronic throttle assembly [3] and cable clamp [2] into position.
Install the bolts [1] and cross-tighten diagonally to the specified torque.

E-throttle Body Bolts [1]	
Torque	10 N•m (7.3 ft-lb.)

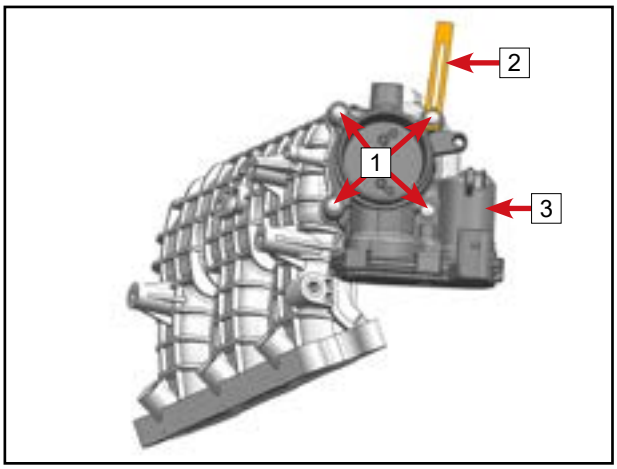

Install fuel pipe assembly [2].
Install bolts [1], tighten to specified torque.

Fuel Pipe Bolt [1]	
Torque	10 N•m (7.3 ft-lb.)

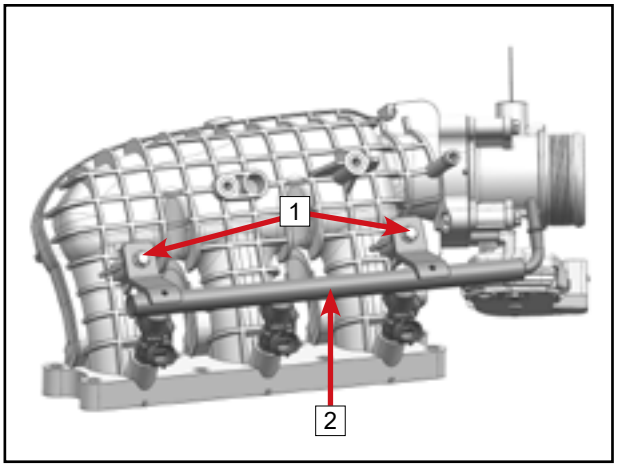

© CFMOTO Powersports, Inc. This manual is subject to all applicable copyright laws. Reproduction or duplication in any form, whole or in part, is strictly prohibited.

Install the boost pressure sensor 2.
Install bolts 1, tighten to specified torque.

Boost Pressure Sensor Bolt 1	
Torque	10 N•m (7.3 ft-lb.)

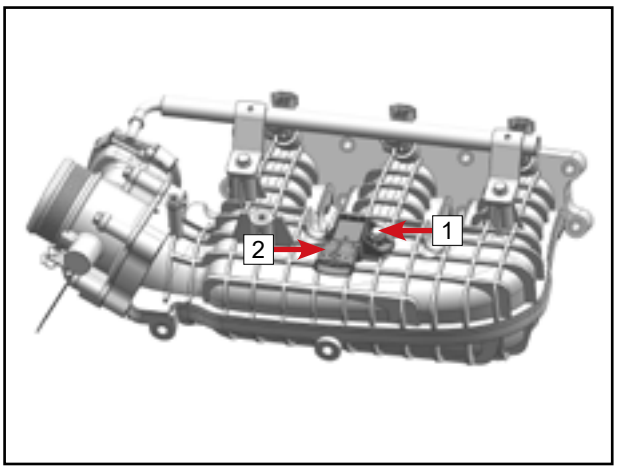

Place bracket 2 in place.
Install bolt 1.
Place bracket 4 in place.
Install bolt 3.
Place bracket 6 in place.
Install bolt 5.

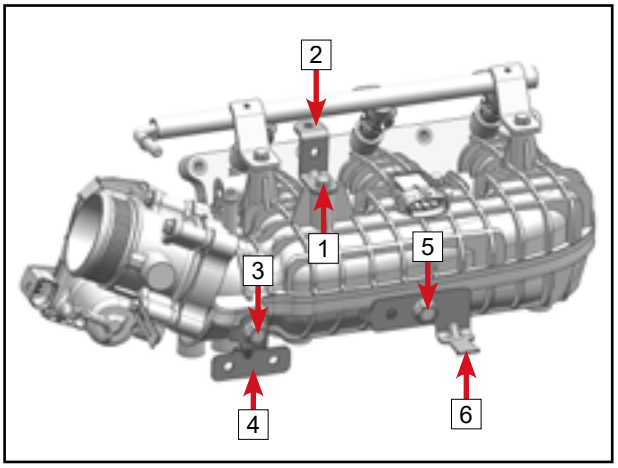

5.9.3.5 Intake Manifold Installation

Place the intake manifold assembly 2 into position.
Install bolts 1, then diagonally cross-tighten to the specified torque.

Intake Manifold Bolts 1	
Torque	10 N•m (7.3 ft-lb.)

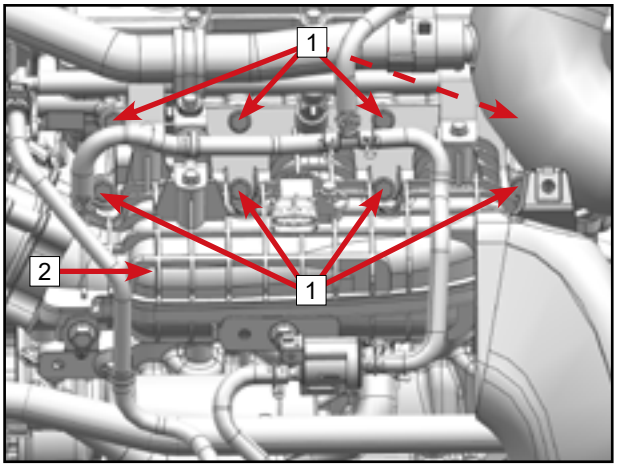

Place intake manifold bracket 2 in place.
Install bolts 1, then tighten to the specified torque.

Intake Manifold Bracket Bolts 1	
Torque	27 N•m (19.9 ft-lb.)

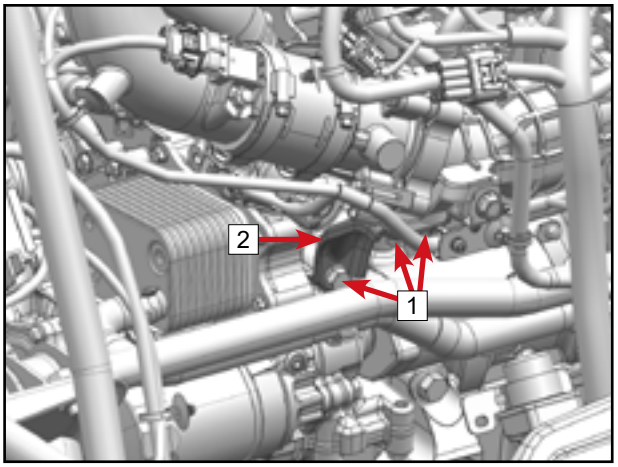

© CFMOTO Powersports, Inc. This manual is subject to all applicable copyright laws. Reproduction or duplication in any form, whole or in part, is strictly prohibited.

Install the throttle body connecting pipe [3] onto the throttle valve body, aligning mark [A] with the boss [B].
Tighten the clamp [3].
Plug in the throttle body connector [1].

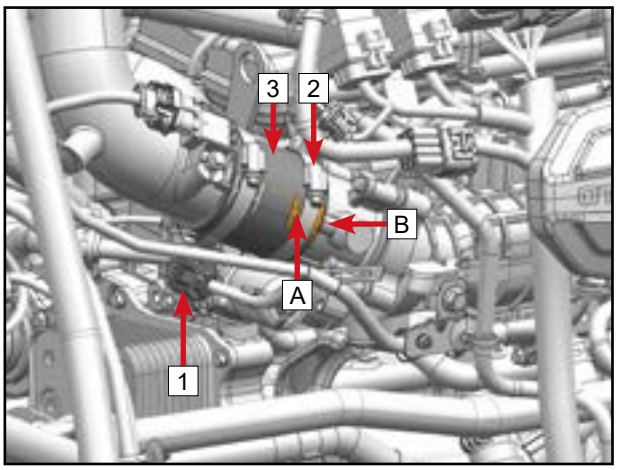

Insert the tie band [1] into the hole in the intake manifold.

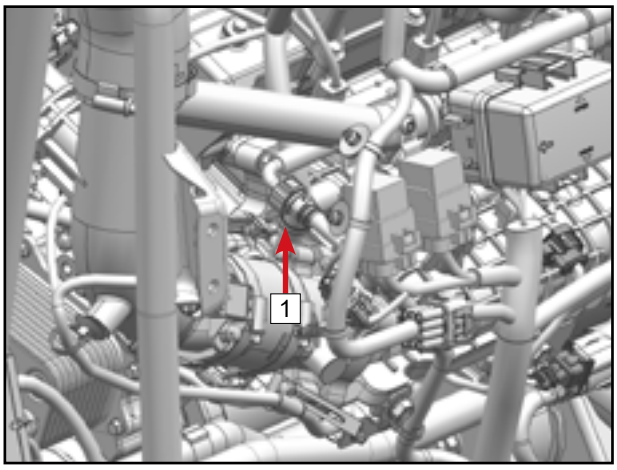

Install the bolt [1] and secure the intake pressure relief valve air outlet hose [2] to the bracket.

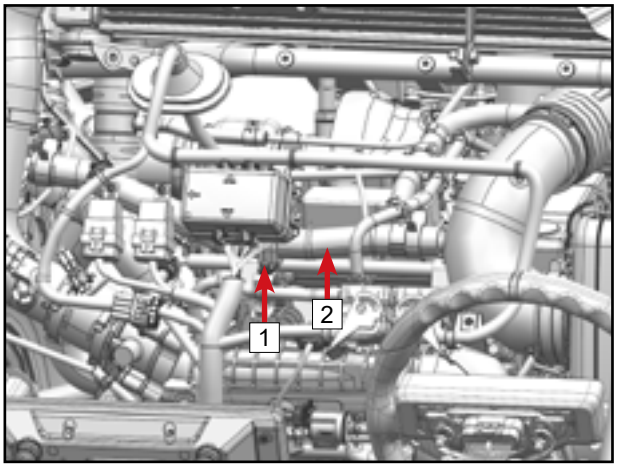

Plug in fuel injector connectors [1].

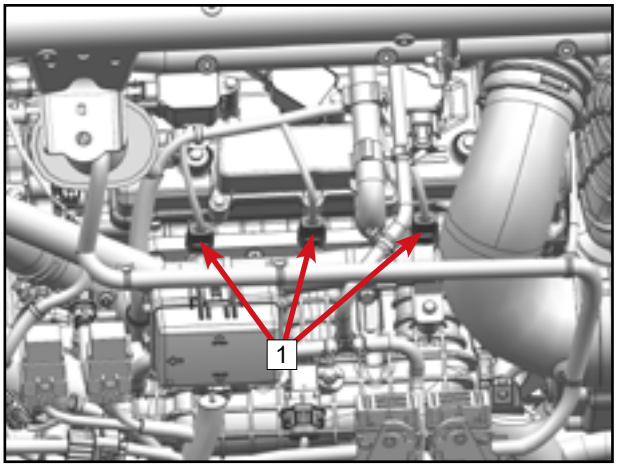

© CFMOTO Powersports, Inc. This manual is subject to all applicable copyright laws. Reproduction or duplication in any form, whole or in part, is strictly prohbited.

Install the fuel pipe [5] onto the fuel rail.
Plug in the boost pressure sensor connector [3].
Install the EVAP canister magnetic valve [2] to the bracket.
Plug in the EVAP canister magnetic valve connector [1].
Insert tie band [8] and [9] into the hole in the intake manifold.
Insert tie band [6] and [7] into the hole in the bracket.
Insert tie band [4] into the hole in the bracket.

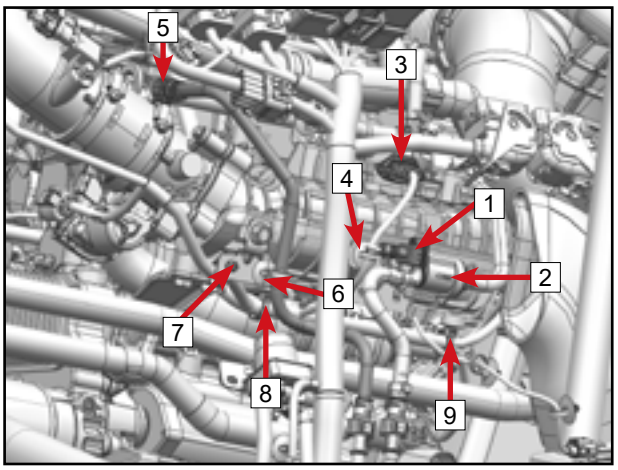

Install tube [2] to intake manifold.
Tighten the clamp [1].
Insert the tie band [3] into the hole in the bracket.

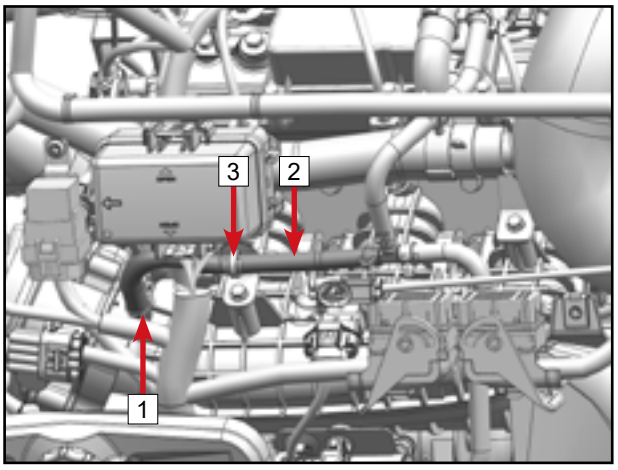

Refer to Chapter 06 for installation:
- Relevant body panels
- Seats (Z10) or the rear row seats (Z10-4)

© CFMOTO Powersports, Inc. This manual is subject to all applicable copyright laws. Reproduction or duplication in any form, whole or in part, is strictly prohbited.

5.10 Exhaust System

5.10.1 Removal

⚠WARNING

Do not touch the exhaust system components immediately after the engine stops running.

Disconnect the oxygen sensor connector.

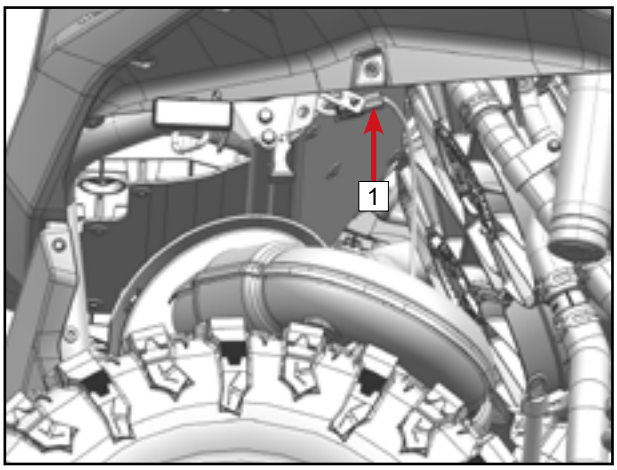

Releasethe clamp 1.

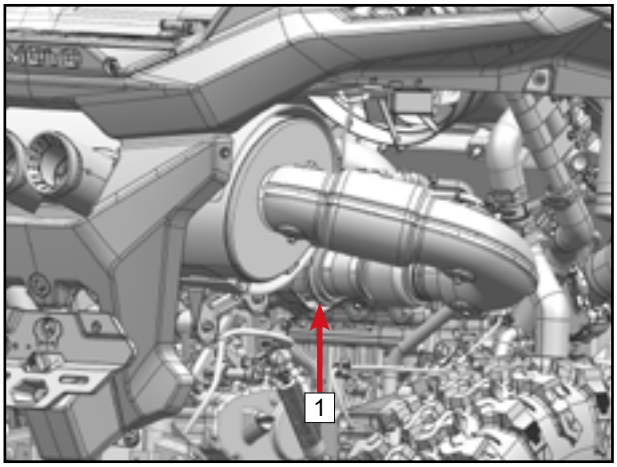

Remove the bracket bolts 1 and lock nuts.
Remove exhaust system 2.

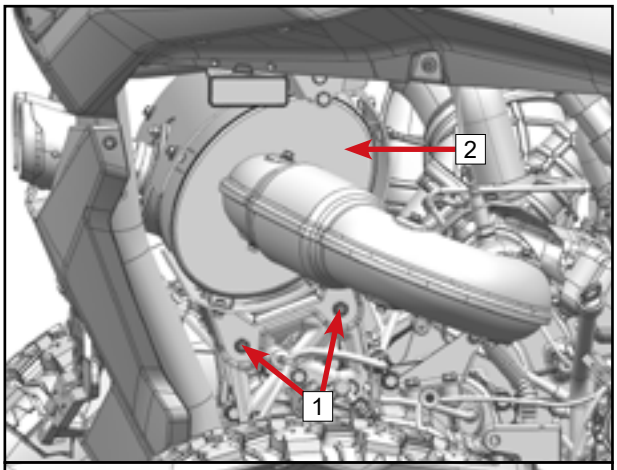

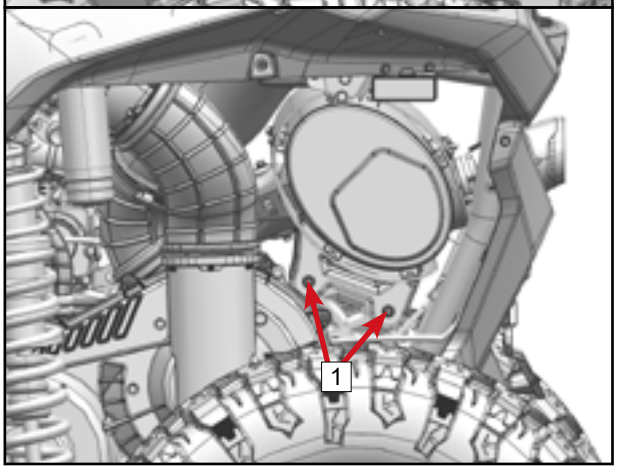

© CFMOTO Powersports, Inc. This manual is subject to all applicable copyright laws. Reproduction or duplication in any form, whole or in part, is strictly prohbited.

Remove and discard the flange gasket 1.

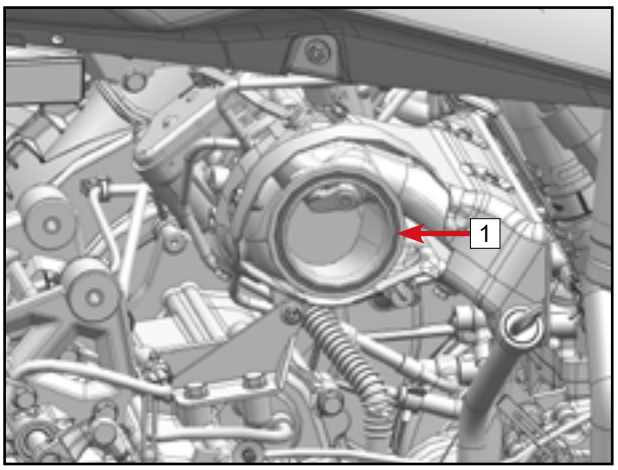

Exhaust System Disassembly
Remove bolts 1 and washers.
Remove the muffler heat shield 2.

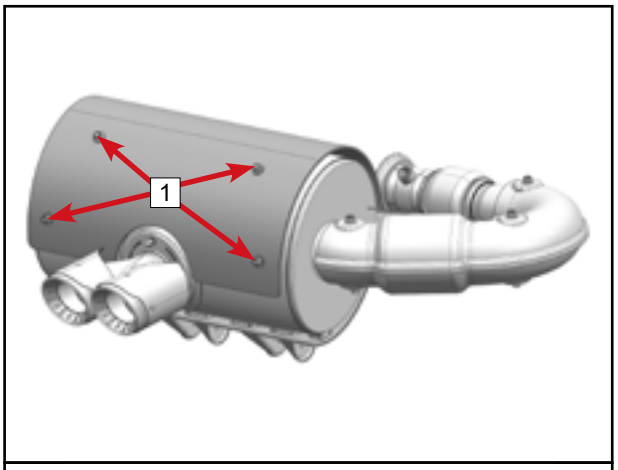

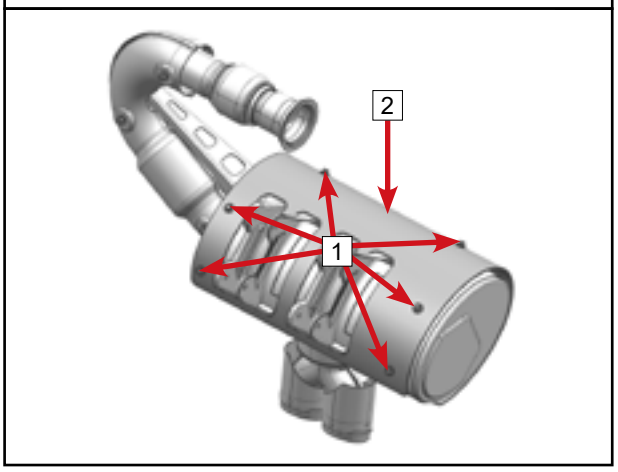

Remove bolts 1 and washers.
Remove the exhaust pipe heat shield 1 2.

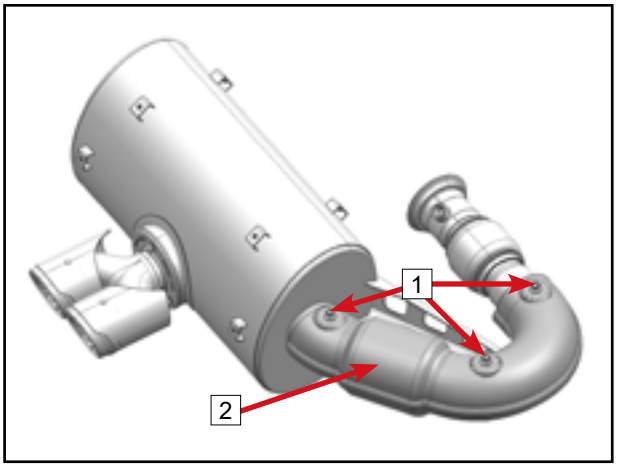

© CFMOTO Powersports, Inc. This manual is subject to all applicable copyright laws. Reproduction or duplication in any form, whole or in part, is strictly prohibited.

Remove bolts [1] and washers.
Remove the exhaust pipe heat shield 2 [2].

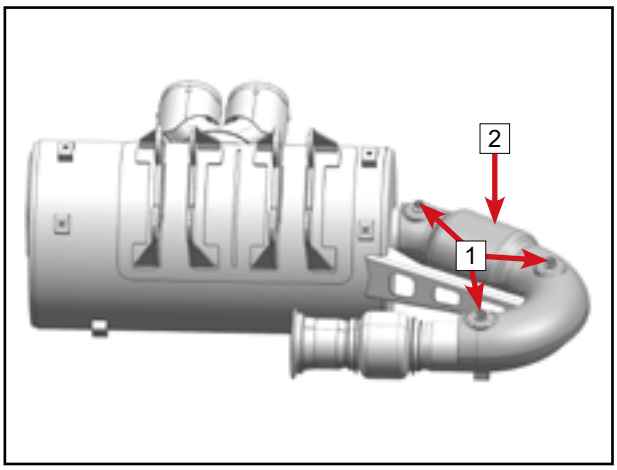

Muffler Body Disassembly
Remove the cap nuts [1], washer [2] and [3].
Remove the spark arrestor [4] .

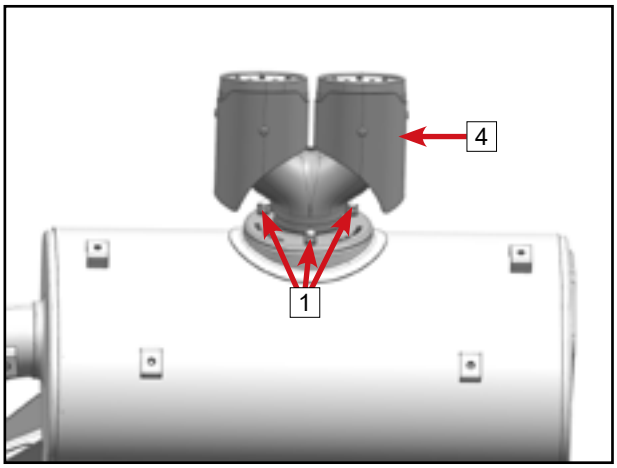

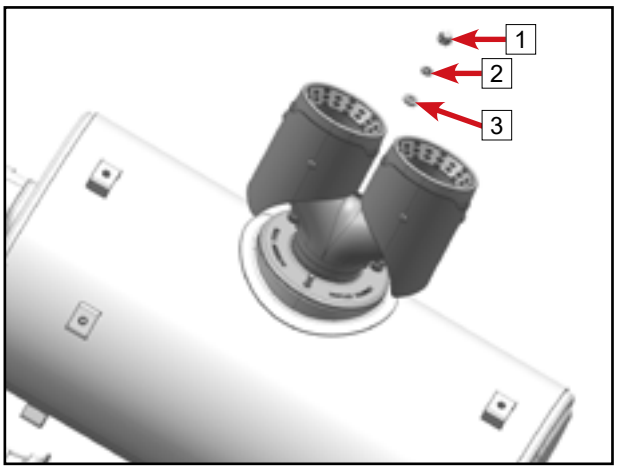

Remove graphite gasket [1].

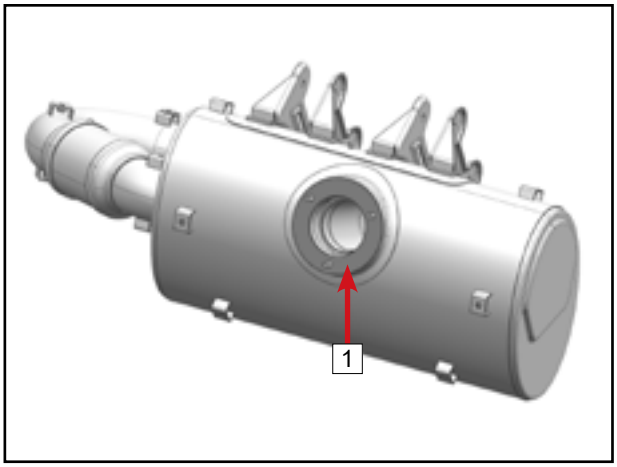

© CFMOTO Powersports, Inc. This manual is subject to all applicable copyright laws. Reproduction or duplication in any form, whole or in part, is strictly prohbited.

5.10.2 Inspection

Inspect the muffler body assembly [1] for cracks or other damage. Replace as necessary.

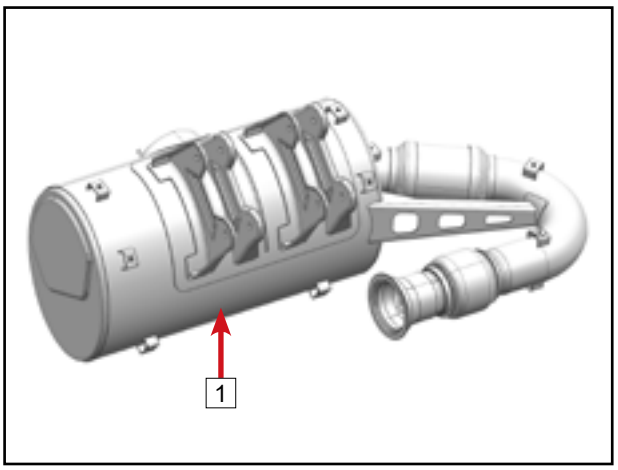

Check the exhaust pipe heat shields 1 [1], 2 [2] and muffler heat shield [3] for damage. Replace if necessary.

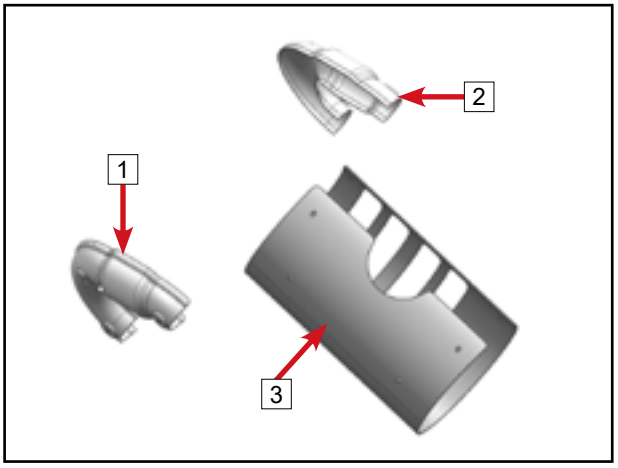

Use a brush to carefully remove carbon deposits from the spark arrestor [1].

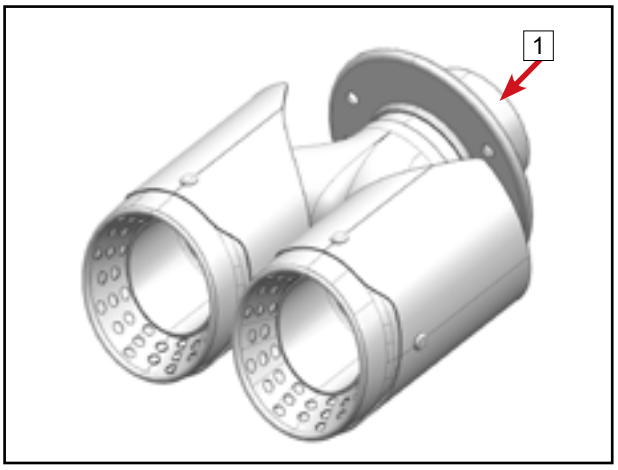

Inspect graphite gasket [1] for cracking or other damage. Replace if necessary.

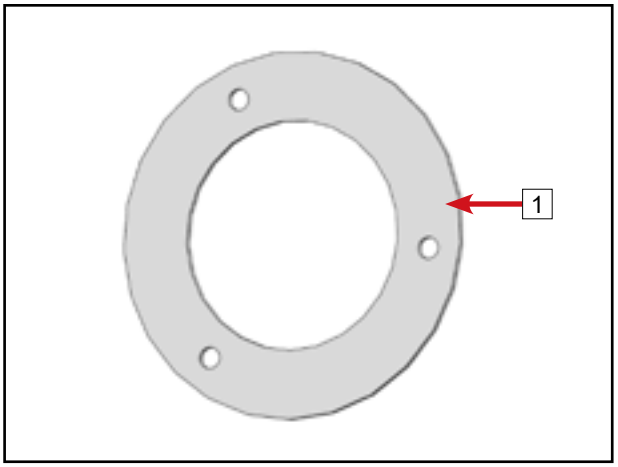

© CFMOTO Powersports, Inc. This manual is subject to all applicable copyright laws. Reproduction or duplication in any form, whole or in part, is strictly prohbited.

5.10.3 Reassembly

Install the graphite gasket 1.

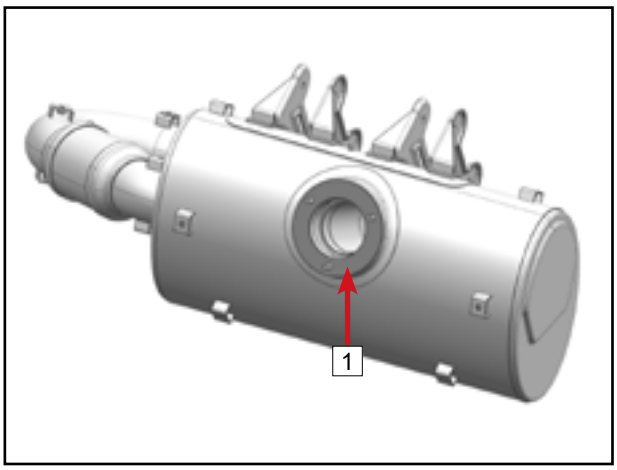

Install spark arrestor 4.
Install washers 3 and washers 2.
Install nuts 1, tighten to specified torque.

Spark Arrestor Nuts 1	
Torque	10 N•m (7.3 ft-lb.)

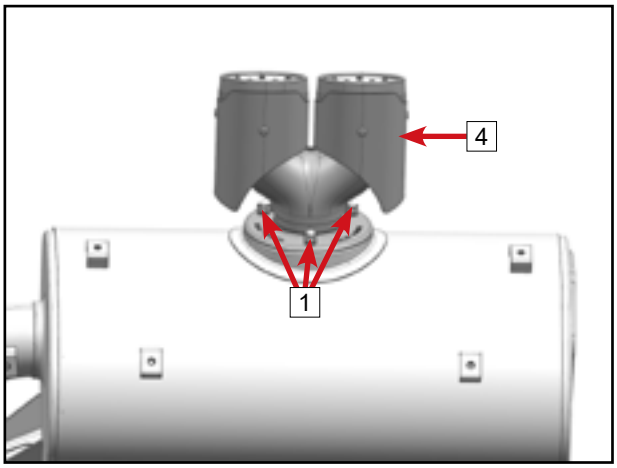

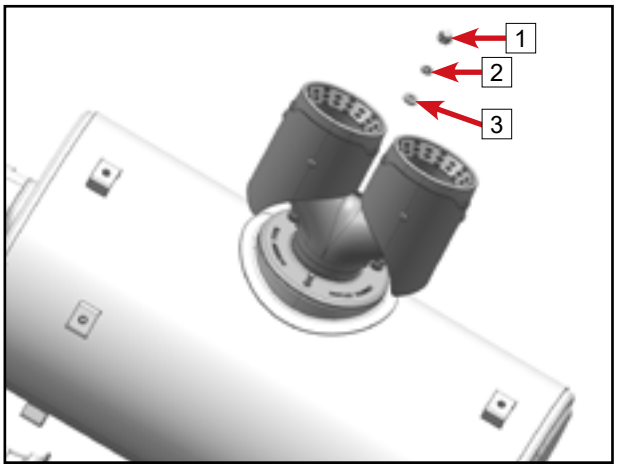

Exhaust Pipe Reassembly

Place the exhaust pipe heat shield 2 2 into position.
Install bolts 1 and washers, then tighten to the specified torque.

Exhaust Pipe Heat Shield Bolts 1	
Torque	10 N•m (7.3 ft-lb.)

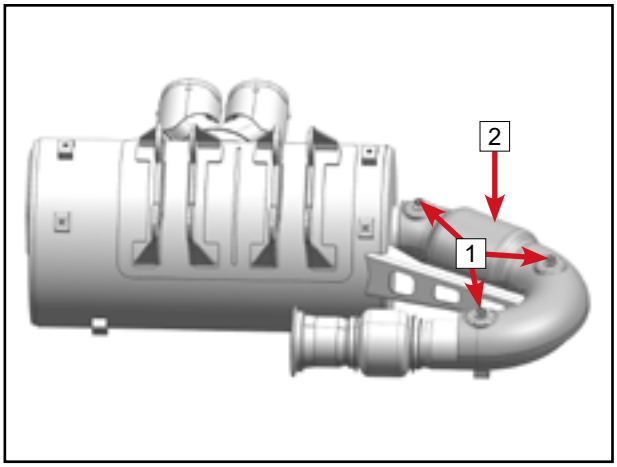

© CFMOTO Powersports, Inc. This manual is subject to all applicable copyright laws. Reproduction or duplication in any form, whole or in part, is strictly prohibited.

Place the exhaust pipe heat shield 1 [2] into position.
Install the bolts [1] and washers, then tighten to the specified torque.

Exhaust Pipe Heat Shield Bolts [1]	
Torque	10 N•m (7.3 ft-lb.)

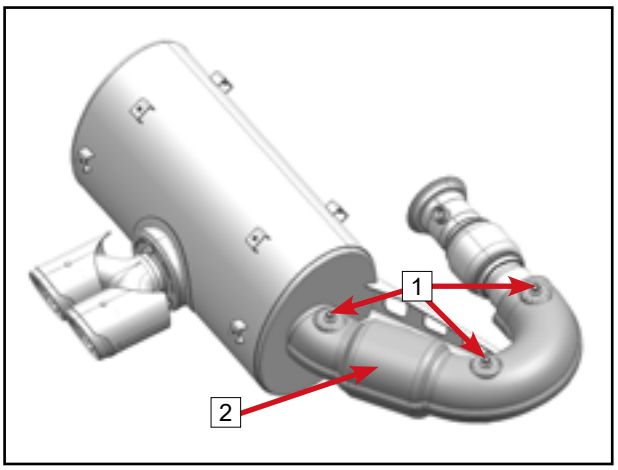

Place the muffler body heat shield [2] into position.
Install the bolts [1] and washers, then tighten to the specified torque.

Muffler Body Heat Shield Bolts [1]	
Torque	10 N•m (7.3 ft-lb.)

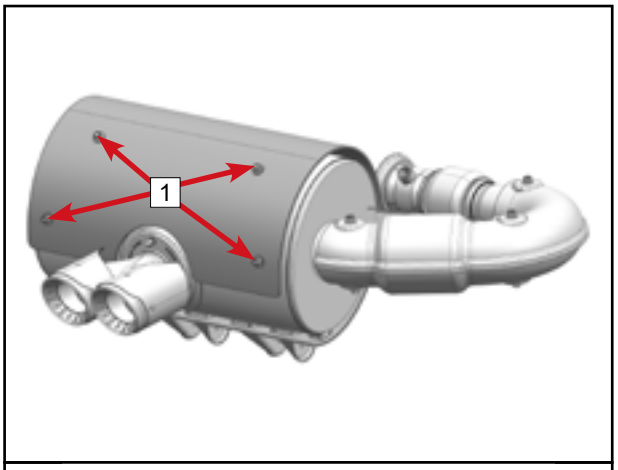

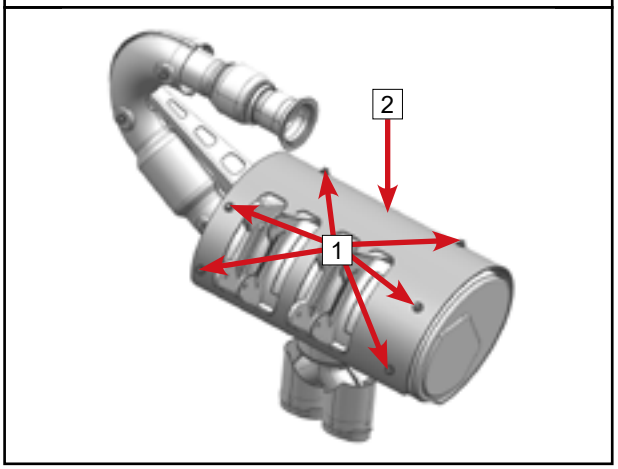

Exhaust System Installation
Install a new flange gasket [1] on the turbocharger.

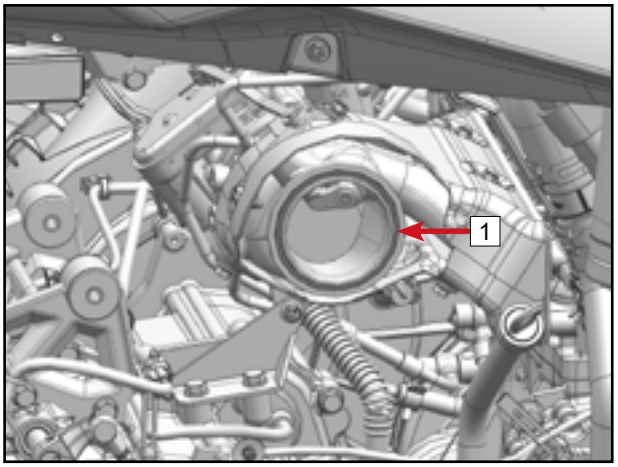

© CFMOTO Powersports, Inc. This manual is subject to all applicable copyright laws. Reproduction or duplication in any form, whole or in part, is strictly prohbited.

Place the exhaust system [2] into postition. Install the bracket bolts [1] and lock nuts, then tighten the bolts [1] to the specified torque.

Muffler Body Bolt [1]	
Torque	30 N•m (22.1 ft-lb.)

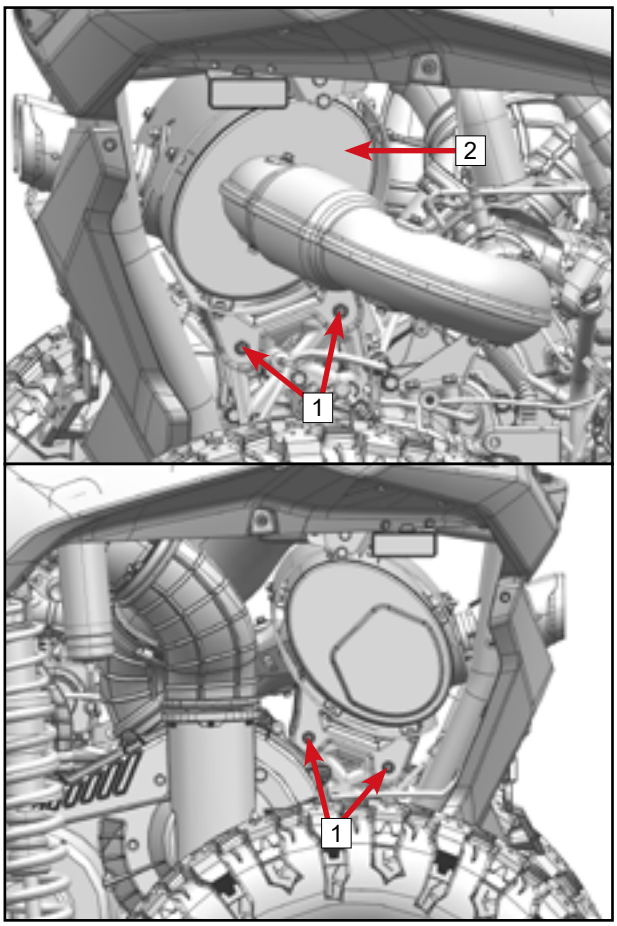

Tighten the clamp [1].

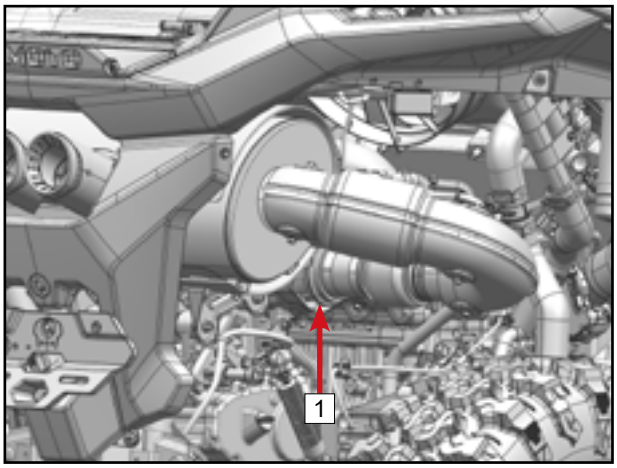

Plug in the oxygen sensor connector.

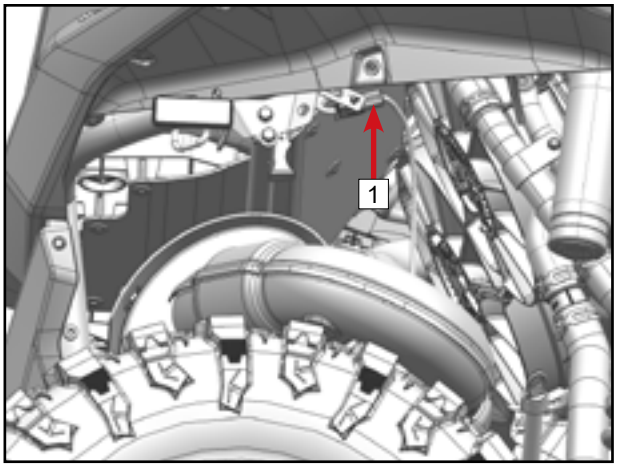

© CFMOTO Powersports, Inc. This manual is subject to all applicable copyright laws. Reproduction or duplication in any form, whole or in part, is strictly prohbited.

5.11 Turbocharger and Intercooler System

5.11.1 Exploded View

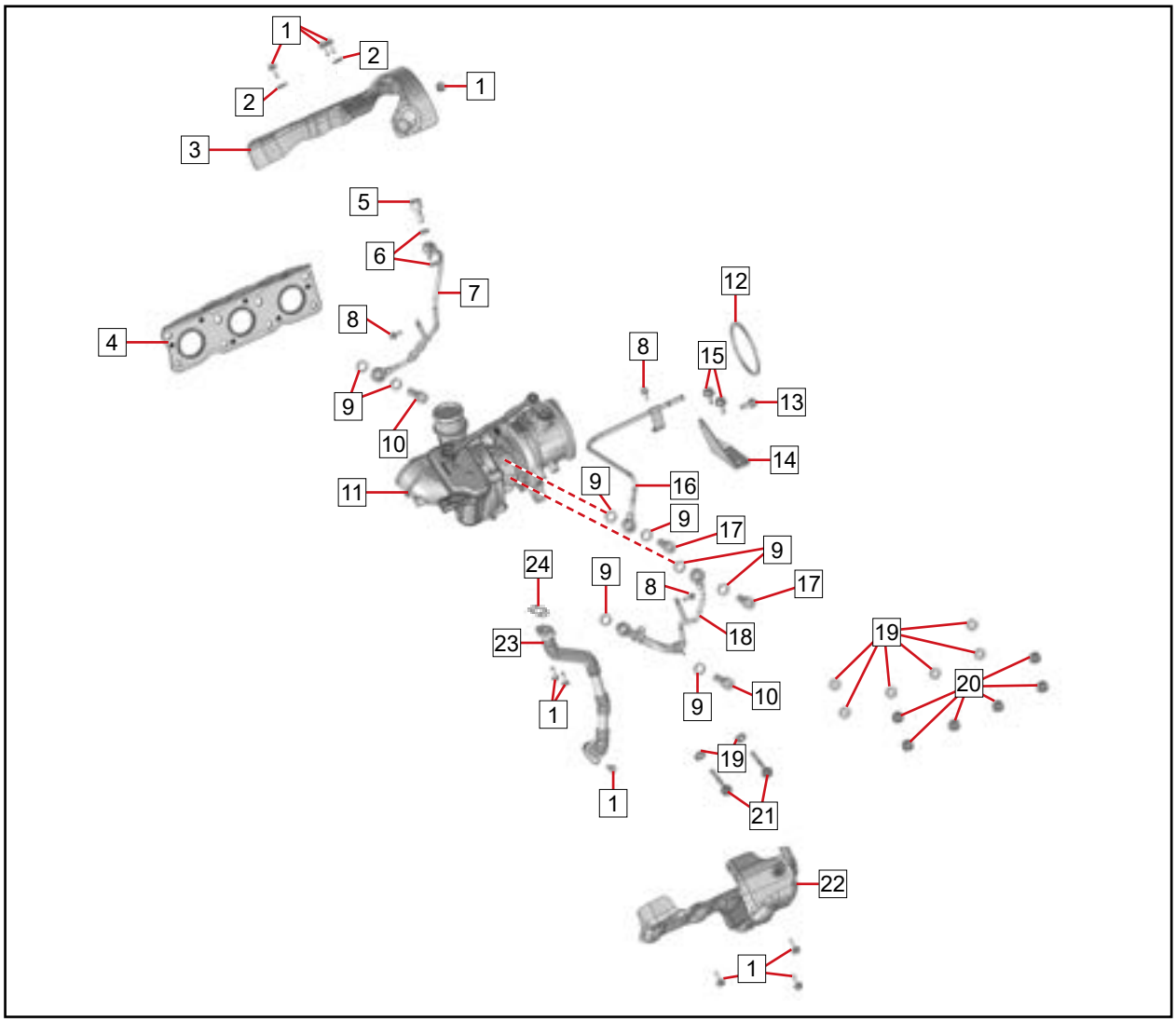

Number	Part Name	Remarks
1	Bolt M6×16	10 N•m (7.3 ft-lb.)
2	Washer 6.3×16.3×2	
3	Turbocharger heat shield 1	
4	Heat insulation plate integrated with the turbocharger gasket	N
5	Turbocharger oil inlet bolt	30 N•m (22.1 ft-lb.)
6	Turbocharger oil inlet bolt gasket 2	
7	Turbocharger oil inlet pipe assembly	
8	Bolt M6×12	10 N•m (7.3 ft-lb.)
9	Turbocharger oil inlet bolt gasket	
10	Turbocharger oil inlet bolt 2	30 N•m (22.1 ft-lb.)
11	Turbocharger	
12	Flange gasket	
13	Bolt M8×16	27 N•m (19.9 ft-lb.)
14	Turbocharger bracket	

© CFMOTO Powersports, Inc. This manual is subject to all applicable copyright laws. Reproduction or duplication in any form, whole or in part, is strictly prohibited.

Number	Part Name	Remarks
15	Bolt M8×20	27 N•m (19.9 ft-lb.)
16	Turbocharger outlet pipe assembly	
17	Turbocharger water inlet bolt	30 N•m (22.1 ft-lb.)
18	Turbocharger water inlet pipe assembly	
19	Washer	
20	Stop nut M8	SS, 35 N•m (25.8 ft-lb.)
21	Heat-resistant bolt M8×45	SS, 35 N•m (25.8 ft-lb.)
22	Turbocharger heat shield 2	
23	Turbocharger oil return pipe assembly	
24	Turbocharger oil return pipe gasket	N

N: Parts that must be replaced after removal
SS: Follow the specified tightening sequence.

© CFMOTO Powersports, Inc. This manual is subject to all applicable copyright laws. Reproduction or duplication in any form, whole or in part, is strictly prohbited.

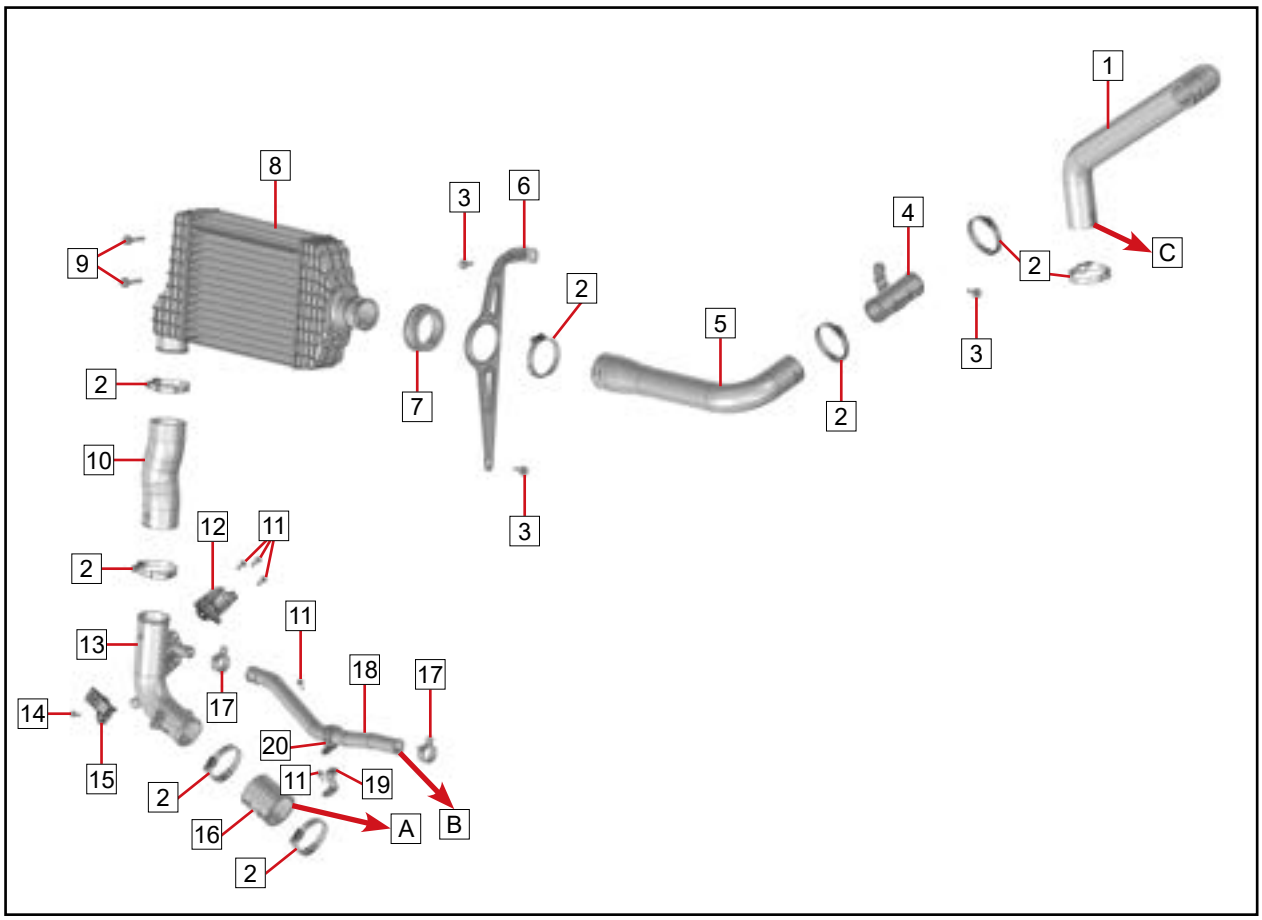

Number	Part Name	Remarks
1	Intercooler intake hose 1	
2	T-shaped screw clamp (50-70)	
3	Bolt M8×20	27 N•m (19.9 ft-lb.)
4	Intercooler intake pipe	
5	Intercooler intake hose 2	
6	Intercooler mounting bracket	
7	Intercooler buffer rubber pad	
8	Intercooler assembly	
9	Bolt M8×40	27 N•m (19.9 ft-lb.)
10	Intercooler outet hose	
11	Bolt M6×16	10 N•m (7.3 ft-lb.)
12	Intake pressure relief valve	
13	Intercooler outlet pipe	
14	Bolt M6×20	10 N•m (7.3 ft-lb.)
15	Boost pressure sensor	
16	Throttle body connecting pipe	
17	Clamp B30	
18	Intake pressure relief valve exhaust pipe	
19	Intake pressure relief valve exhaust hose bracket	
20	Pressure relief valve outlet pipe clamp	

A: Connect the electronic throttle assembly
B: Connect the air filter outlet pipe
C: Connect the turbocharger

© CFMOTO Powersports, Inc. This manual is subject to all applicable copyright laws. Reproduction or duplication in any form, whole or in part, is strictly prohibited.

5.11.2 Overview

Turbocharger

1: Compressor inlet
2: Compressor outlet
3: Turbo inlet
4: Turbo outlet
5: Electric actuator

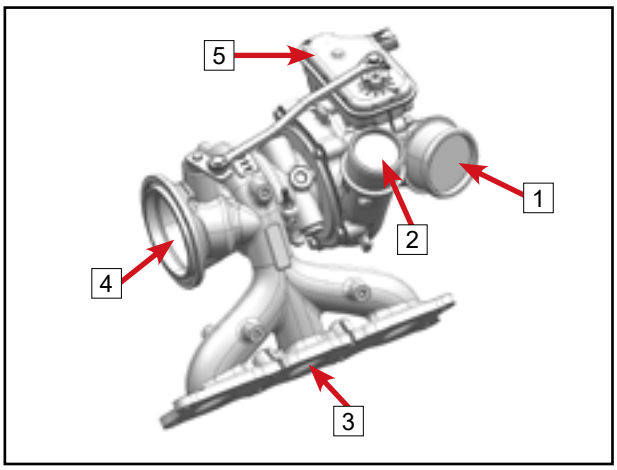

Turbo

Exhaust gas causes the turbo impeller to rotate and accelerate. Exahust gas flows through the turbo outlet to the muffler.
The turbo impeller drives the compressor impeller via the rotor shaft. As the turbo impeller rotates, the compressor impeller rotates at the same speed.

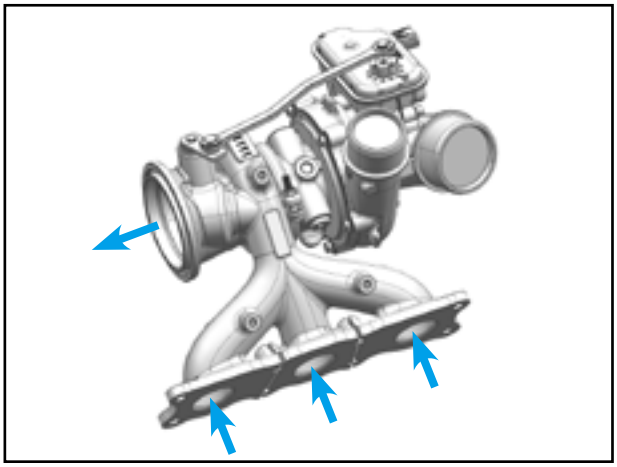

Compressor

Compressor impeller rotation causes filtered air to enter the compressor inlet. The air is then compressed and exits through the compressor outlet.

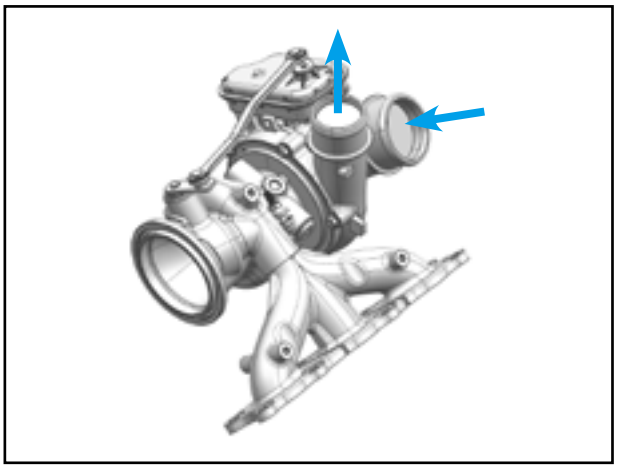

Boost Pressure Sensor

To ensure optimum engine operation under all conditions, the ECM requires the use of two boost pressure temperature sensors: one to measure air pressure upstream of the throttle plate and the other to measure downstream.
Refer to Chapter 12 for servicing of the boost pressure sensors.

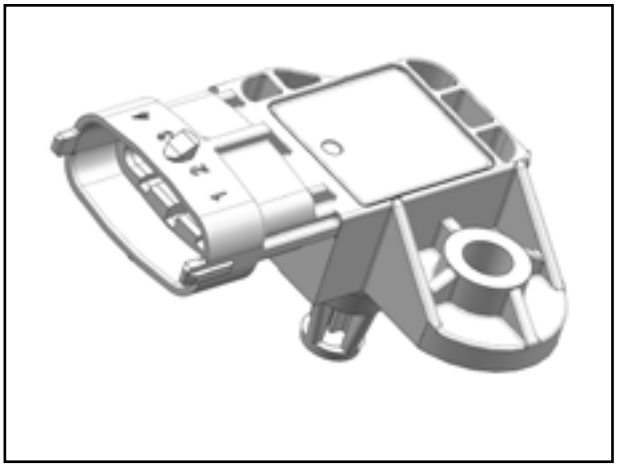

© CFMOTO Powersports, Inc. This manual is subject to all applicable copyright laws. Reproduction or duplication in any form, whole or in part, is strictly prohbited.

Intake Pressure Relief Valve

If the boost pressure sensor [2] upstream of the throttle plate measures excessive boost, the intake relief valve [1] will open and excess air pressure will be returned to the intake hose upstream of the compressor inlet.

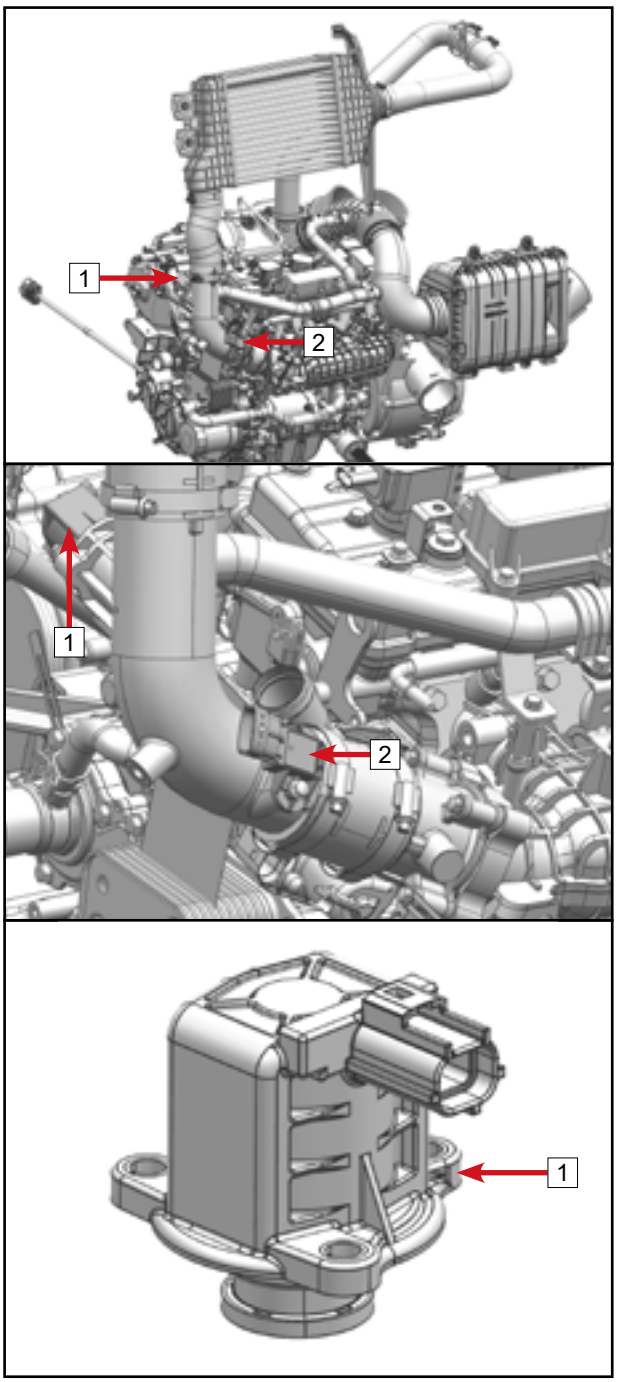

Refer to the Electrical System section for servicing of the intake pressure relief valve [1].

© CFMOTO Powersports, Inc. This manual is subject to all applicable copyright laws. Reproduction or duplication in any form, whole or in part, is strictly prohbited.

5.11.3 Maintenance

The turbocharger is susceptible to damage due to other system failures. Refer to troubleshooting in relevant sections.

NOTE
If particulate matter is suspected to have entered the exhaust system, take appropriate action to remove it.

NOTE
Never run the engine without an air filter.

NOTE
Engine oil type, change intervals, and procedures must be strictly followed.

The frequency of air filter changes should be adjusted to the driving conditions, which are essential to ensure proper engine performance and service life.

In dusty driving conditions, the frequency of air filter replacement must be increased:

- Driving in dry sand
- Driving on dry dirt roads
- Driving on dry gravel roads or similar conditions

NOTE: Under these conditions, driving in a group of vehicles require an increased requirement for replacing the air filter.

Refer to Chapter 03 for air filter replacement intervals.

Precautions

Engine Warm-up and Cooling

Allow the vehicle to reach operating temperature before letting the engine run under harsh conditions. This will allow the oil to reach the proper viscosity and properly lubricate the turbocharger.

Allow the vehicle to idle for 2 minutes before turning it off. This allows the lubrication system to gradually cool the turbocharger.

© CFMOTO Powersports, Inc. This manual is subject to all applicable copyright laws. Reproduction or duplication in any form, whole or in part, is strictly prohbited.

5.11.4 Troubleshooting

Insufficient power

1. Cold Start
   - Allow the vehicle to reach the operating temperature at which the turbo can operate at maximum efficiency.
2. Air filter clogged
   - Check the air filter.
3. Malfunction, restriction or leakage of air intake system.
   - Check the tightness of the clamps and screws.
   - Check for damaged or missing gaskets.
   - Check for foreign material between air filter and turbocharger.
   - Check parts for damage, cracks or obstructions.

   Repair or replace. Refer to Air Intake System section.
4. Exhaust system is defective, restricted, or leaking.
   - Check exhaust system for clogging or damage. Replace parts if necessary. Refer to Exhaust System section.
   - Check exhaust manifold for cracks and damaged or missing gaskets. Replace parts if necessary. Refer to Exhaust System section.
   - Check for foreign objects in the exhaust system.
5. Fuel pump is defective.
   - Check fuel pump.
6. Faulty sensor or injector.

   Refer to Electrical System section to check:
   - Fault codes.
   - Fuel injection system is in good condition.
   - Boost pressure temperature sensor.
   - Intake pressure relief valve.
7. Engine damage or malfunction.
   - Check that valve timing is correct.
8. Wastegate is defective.
   - Check wastegate actuator.
   - Check that the wastegate moves smoothly.
9. Turbocharger clogged or damaged.
   - Check for excessive carbon deposits on the housing.
   - Check for rotor radial clearance.
   - Check for worn rotor shaft bearings.
   - Check for damaged or restricted turbocharger housing.

Noise during operation

1. Loose bracket, turbocharger flange or clamp.
   - Check the tightness of the clamps and screws.
   - Check the brackets and parts connected to the turbocharger for looseness or damage.
2. Foreign matter in intake or exhaust system.
   - Check and clean the air intake and/or exhaust system.
3. Faulty, restricted or leaking air intake system.
   - Check the tightness of the clamps and screws.
   - Check for damaged or missing gaskets.
   - Check parts for damage, cracks or obstructions.
4. Exhaust system is defective, restricted, or leaking.
   - Check the tightness of the clamps and screws.
   - Check for damaged or missing gaskets.
   - Check for damaged parts, cracks or obstructions.
5. Turbocharger is clogged or damaged.
   - Check for excessive carbon buildup on housing.
   - Check for imbalance caused by damaged or broken rotor blades.
   - Check for damaged or restricted turbocharger housing.
   - Check for rotor radial play.
   - Check for worn rotor shaft bearings.

© CFMOTO Powersports, Inc. This manual is subject to all applicable copyright laws. Reproduction or duplication in any form, whole or in part, is strictly prohibited.

Blue smoke and/or oil consumption

1. Clogged air filter.
   - Check air filter. Refer to “Air Intake System” section.
2. Faulty, restricted, or leaking air intake system.
   - Check tightness of clamps and screws.
   - Check for damaged or missing gaskets.
   - Check parts for damage, cracks or obstructions.
3. An unsuitable type of engine oil has been used.
   - Replace engine oil with recommended engine oil.
4. Excessive carbon deposits on housing.
   - Check for clogged crankcase ventilation system.

Excessive engine oil in turbocharger

1. Worn rotor shaft bearings.
   - Note that some traces of engine oil are normal.
2. Clogged oil return pipe.
   - Check if the oil return pipe is clogged.
3. Crankcase ventilation system is clogged.
   - Check if the crankcase ventilation system is clogged.
4. Air intake system malfunction, restriction or leakage.
   - Check the tightness of the clamps and screws.
   - Check for damaged or missing gaskets.
   - Check for foreign matter between air filter and turbocharger.
   - Check parts for damage, cracks or obstructions.
5. The exhaust system is faulty, restricted or leaking.
   - Check the tightness of the clamps and screws.
   - Check for damaged or missing gaskets.
   - Check for damaged parts, cracks or obstructions.
   - Check for foreign objects in the exhaust system.
6. Loose bracket, turbocharger flange or clamp.
   - Check the tightness of the clamps and screws.
   - Check the brackets and parts connected to the turbocharger for looseness or damage.
7. Excessive carbon buildup on housing.
   - Check for clogged crankcase ventilation system.

Damaged turbo rotor or compressor rotor

1. Air intake system leaks.
   - Check for foreign objects between air filter and turbocharger.
   - Check air filter. Refer to “Intake System” section.
   - Check tightness of clamps and screws.
   - Check parts for damage, cracks or obstructions.
2. Exhaust system is defective, restricted, or leaking.
   - Check the tightness of the clamps and screws.
   - Check for damaged or missing gaskets.
   - Check for damaged parts, cracks or obstructions.
   - Check for foreign objects in the exhaust system.
3. Clogged or damaged turbocharger.
   - Check for excessive carbon buildup on housing.
   - Check for rotor radial clearance.
   - Check for worn rotor shaft bearings.
   - Check for damaged or restricted turbocharger housing.
4. Clogged turbocharger oil inlet and/or return lines.
   - Check and/or replace oil tube.
5. Preheating time too short.
   - Extend the warm-up time.

© CFMOTO Powersports, Inc. This manual is subject to all applicable copyright laws. Reproduction or duplication in any form, whole or in part, is strictly prohbited.

Excessive radial clearance and/or axial clearance of the rotor shaft

1. Air intake system leaks.
   - Check for foreign material between air filter and turbocharger.
   - Check air filter. Refer to “Intake System” section.
   - Check the tightness of the clamps and screws.
   - Check parts for damage, cracks or obstructions.
2. Exhaust system is defective, restricted, or leaking.
   - Check the tightness of the clamps and screws.
   - Check for damaged or missing gaskets.
   - Check for damaged parts, cracks or obstructions.
   - Check for foreign matter in the exhaust system.
3. Insufficient lubrication or lagging oil supply at startup.
   - Check for restricted, clogged or leaking oil lines.
   - Check engine oil filter for restriction or clogging.
   - Check engine oil pressure. Check engine oil pressure. Refer to the “Lubrication System” section.
4. Engine oil is contaminated or engine oil is not the proper type.
   - Replace engine oil and oil filter. Refer to “Lubrication System” section.
5. Excessive carbon deposits on housing.
   - Check for clogged crankcase ventilation system.
6. Worn rotor shaft bearings.

© CFMOTO Powersports, Inc. This manual is subject to all applicable copyright laws. Reproduction or duplication in any form, whole or in part, is strictly prohbited.

5.11.5 Turbocharger Inspection

Refer to the Engine Disassembly section for turbocharger removal.
Refer to the Engine Assembly section for turbocharger installation.

Inspect the turbocharger for:
- Any damage or cracks
- Rust and corrosion
- Oil leaks
- Contaminants and/or oil coking at the oil inlet and outlet
- Whether the rotor shaft rotates easily and smoothly
- Whether the rotor shaft is discolored due to overheating

Check the distortion of the turbocharger flange 1 with a knife edge ruler and a feeler gauge. If the measured value is greater than the service limit, replace the turbocharger.

Turbocharger Flange Distortion	
Service Limit	0.1 mm (0.00394 in.)

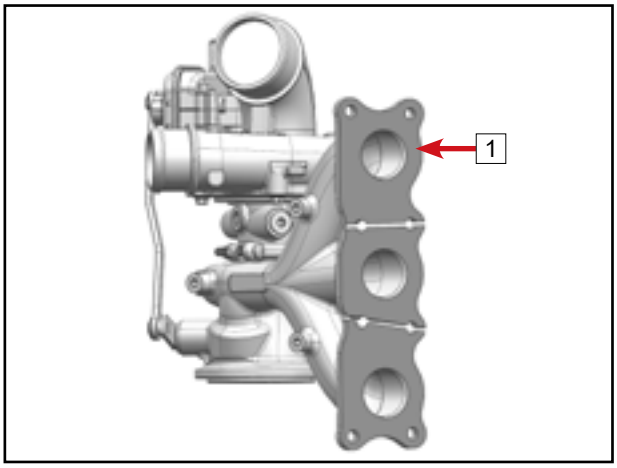

© CFMOTO Powersports, Inc. This manual is subject to all applicable copyright laws. Reproduction or duplication in any form, whole or in part, is strictly prohbited.

INTENTIONAL BLANK / REMARKS PAGE

© CFMOTO Powersports, Inc. This manual is subject to all applicable copyright laws. Reproduction or duplication in any form, whole or in part, is strictly prohibited.

6.1 Hood Assembly 06-6
6.1.1 Hood Deco Cover 06-6
6.2 Front LH/RH Panel 06-7
6.2.1 Front LH Panel 06-7
6.2.2 Front RH Panel 06-7
6.3 Fender Flare (Select Markets) 06-8
6.3.1 Front LH/RH Fender Flare 06-8
6.3.2 Rear LH/RH Fender Flare 06-8
6.4 Headlight Panel Assembly 06-9
6.4.1 LH/RH Headlight 06-9
6.4.1.1 Headlight Removal 06-9
6.4.2 Headlight Panel Deco Guard 06-10
6.5 Side Door Assembly 06-10
6.5.1 LH/RH Front Door 06-10
6.5.2 LH/RH Front Door Armrest 06-11
6.5.3 LH/RH Front Door Inner Deco Plate 06-11
6.5.4 LH / RH Door Lock 06-11
6.5.5 LH/RH Front Door Deco Plate 06-11
6.5.6 LH/RH Door Stereo Deco Plate (Status 1) 06-12
6.5.7 LH/RH Door Stereo Deco Plate (Status 2) 06-12
6.5.8 Audio speaker 06-12
6.5.9 Hinges 06-12
6.5.10 LH / RH Door Latch Hook 06-13
6.5.11 LH/RH Rear Door Armrest Deco Cover (Z10-4) 06-13
6.5.12 LH/RH Rear Door Armrest 06-13
6.5.13 LH/RH Rear Door Inner Deco Plate (Z10-4) 06-13
6.5.14 LH/RH Rear door Deco Plate (Z10-4) 06-14
6.6 Seat 06-14
6.6.1 Driver Seat Assembly 06-14
6.6.2 Passenger Seat 06-15

© CFMOTO Powersports, Inc. This manual is subject to all applicable copyright laws. Reproduction or duplication in any form, whole or in part, is strictly prohbited.

6.7 Safety Belt Assembly 06-15
6.7.1 Safety Belt Buckle 06-15
6.7.2 Safety Belt 06-15
6.8 LH/RH Door Sill Deco Plate 06-17
6.9 LH/RH Side Panel 06-17
6.10 LH/RH Skid Plate 06-17
6.12 LH/RH Lower Panel (Z10-4) 06-18
6.13 Front Skid Plate 06-18
6.14 Middle Skid Plate 06-18
6.15 Rear Skid Plate 06-19
6.16 Extended Skid Plate (Z10-4) 06-19
6.17 EPS Cover Assembly 06-19
6.18 NFC Key Reader 06-20
6.19 Handhold Assembly 06-20
6.20 Fuel Tank RH Cover 06-21
6.21 Front LH/RH Deco Plate 06-21
6.22 LH/RH Audio Grid Cover (Status 1) 06-22
6.23 LH/RH Audio Grid Cover (Status 2) 06-22
6.24 Multi-function Steering Wheel and Steering Wheel Guard 06-23
6.24.1 Multi-function Steering Wheel 06-23
6.24.2 Steering Wheel LH/RH Guard 06-23
6.25 Dashboard Assembly and Switch Group 06-24
6.25.1 Switch Group 06-24
6.25.2 Clock Spring 06-24
6.25.3 Dashboard 06-25
6.26 Switch Service Cover 06-25
6.27 Driver Storage Box Cover 06-25
6.28 Passenger Storage Box Cover 06-26
6.29 Switch Panel Assembly 06-26

© CFMOTO Powersports, Inc. This manual is subject to all applicable copyright laws. Reproduction or duplication in any form, whole or in part, is strictly prohibited.

6.29.1 MMI Dashboard and Dashboard Deco Cover 06-26
6.30 MMI Dashboard Panel Assembly 06-27
6.30.1 MMI Dashboard Deco Plate and Switch 06-27
6.31 LH/RH Cover Assembly 06-27
6.31.1 Middle Cover LH/RH Deco Plate 06-28
6.32 Gearshift Adjustment Cover 06-28
6.33 Middle Cover 06-28
6.34 Rear Middle Cover (Z10-4) 06-29
6.35 Gearshift Mechanism 06-29
6.36 Cab LH/RH Connector 06-29
6.37 Rear Cargo Box Assembly 06-29
6.37.1 Cargo Box Heat Shield 06-30
6.38 Cargo Box LH/RH Side Cover Inner Plate 06-30
6.39 LH/RH Upper Filter Panel 06-31
6.40 Grill Assembly 06-31
6.40.1 Grill Deco Guard 06-31
6.41 Cargo Box Front Baffle 06-32
6.42 Rear Lower Guard 06-33
6.43 Rear LH/RH Side Panel Assembly 06-33
6.43.1 Reflector 06-34
6.43.2 Rear LH Side Panel 06-34
6.43.3 Cargo Box LH Panel and LH Rear Fender 06-35
6.44 Tail light Panel Assembly 06-35
6.44.1 LH/RH Tail Light 06-35
6.45 LH/RH Side Inner Panel 06-36
6.46 LH/RH Front Filter Panel 06-36
6.47 Panel Front Service Cover 06-36
6.48 Air filter Service Cover 06-37
6.49 Panel Upper Service Cover 06-37
6.50 Seat Rear Panel 06-37

© CFMOTO Powersports, Inc. This manual is subject to all applicable copyright laws. Reproduction or duplication in any form, whole or in part, is strictly prohibited.

6.51 Cab Assembly (Z10) 06-37
6.52 Cab Assembly (Z10-4) 06-38
6.52.1 Cab Front Assembly 06-38
6.52.2 Cab Rear Assembly 06-38
6.53 Engine Heat Shield Assembly 06-39
6.53.1 ECU 06-39
6.53.2 Fuse/Relay Box 06-39
6.53.3 Fan Relays 06-39
6.54 Engine Heat Shield 06-39
6.55.1 Air Filter Housing 06-40
6.56 LH / RH Inlet Deflector Plate 06-40
6.57 Battery Box 06-41
6.58 Seat Lower Guard 06-41
6.59 Seat Lower Guard (Z10-4) 06-42
6.60 Floor Board 06-42
6.61 Rear Floor Board (Z10-4) 06-43
6.62 Dashboard Upper Body Assembly 06-43
6.62.1 Driver Storage Box 06-43
6.62.2 Passenger Storage Box 06-44
6.62.3 Dimmer Switch 06-44
6.63 Front Inner Plate Assembly 06-44
6.63.1 PEPS Controller 06-44
6.63.2 T-BOX 06-44
6.63.3 Fuel Tank Cap Assembly 06-45
6.63.4 Buzzer 06-45
6.63.5 Winch Control Relay 06-45
6.63.6 Accessory Power Terminal 06-46
6.63.7 Front Inner Plate 06-46
6.64 Electric Horn (Select Markets) 06-46
6.65 Winch Assembly and Winch Bracket 06-47

© CFMOTO Powersports, Inc. This manual is subject to all applicable copyright laws. Reproduction or duplication in any form, whole or in part, is strictly prohibited.

6.66 Fuel Tank Assembly 06-47
6.67 Front Small Fender 06-48
6.68 E-throttle Pedal 06-48
6.69 Brake Pedal 06-48
6.70 Front Fender Assembly 06-49
6.70.1 BCM 06-49
6.70.2 Suspension Control Unit 06-49
6.70.3 Electronic Limited Slip Differential Lock Controller (If equipped)..... 06-50

© CFMOTO Powersports, Inc. This manual is subject to all applicable copyright laws. Reproduction or duplication in any form, whole or in part, is strictly prohbited.

Maintenance Information
Operation precautions:

1.When replacing parts that are pasted or riveted with warning labels or regulations, the corresponding signs shall be correctly and completely filled in as they are.

2. This chapter mainly introduces the body covering parts removal and installation procedures.

3. This chapter also includes rack, seat, backrest removal and installation instructions.

4. Follow the drawings to arrange the cables, pipes and wirings to the correct position.

Tighten Torque:

M8 bolts	20 (2.0)	Torque N·m (kgf·m)
M6 bolts	10 (1.0)	Torque N·m (kgf·m)
M5 bolts	5 (0.5)	Torque N·m (kgf·m)
Screw	4 (0.4)	Torque N·m (kgf·m)

6.1 Hood Assembly

Removal

Pull up to release the two grommet pins 1.
Pull outward to release the two grommet pins 3 and unhook the two hooks 2 along the diagonal rear B.

Remove the hood 4.

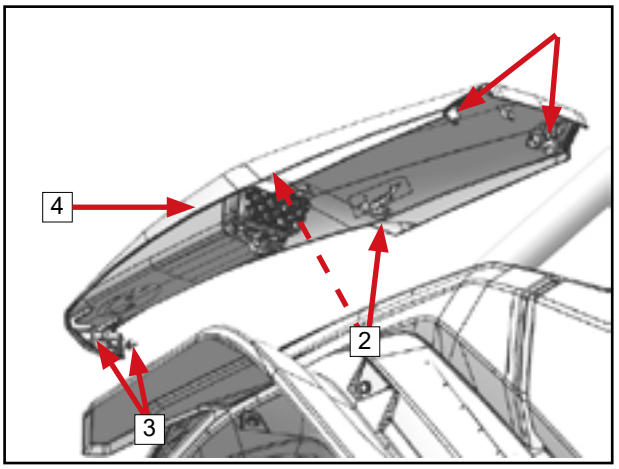

NOTE: Check the 2 rubber grommets 5 at the panel area and the front 2 rubber grommets 6 for detaching.

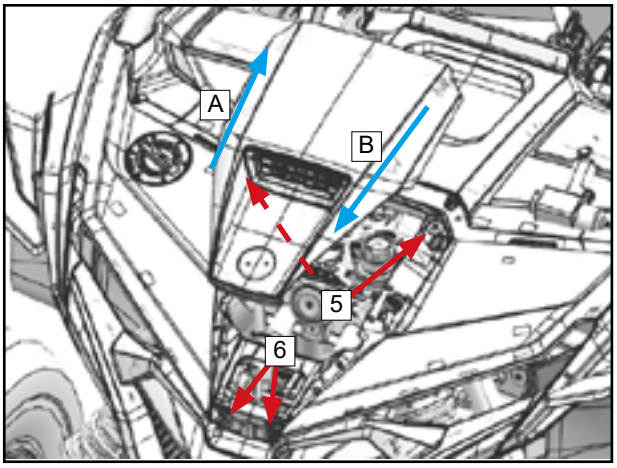

Installation

NOTE: Lubricate the inner roll of the grommet to aid in installation.

Align the two positioning holes 6 of the vehicle and install the grommet pins 3.
Install 6 clasps 2 downwards A.
Install grommet pins 1 downward.
Install the hood 4.

6.1.1 Hood Deco Cover

Removal

Disengage 6 clasps 1.
Remove the hood deco cover 2.

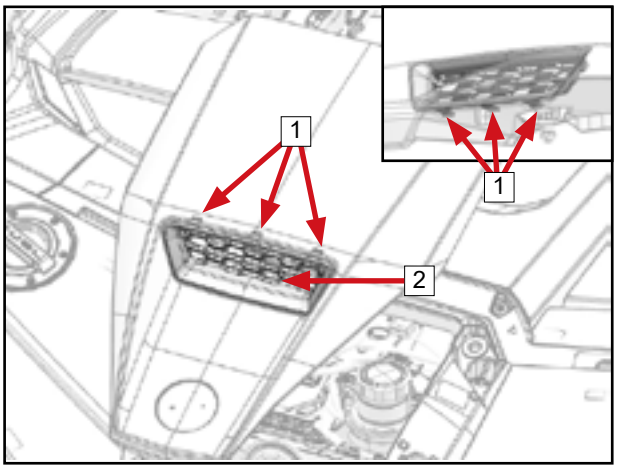

Installation

Reverse the removal procedures for installation.

© CFMOTO Powersports, Inc. This manual is subject to all applicable copyright laws. Reproduction or duplication in any form, whole or in part, is strictly prohbited.

6.2 Front LH/RH Panel

6.2.1 Front LH Panel

Removal

Remove 3 bolts 1.



Remove 2 bolts 2.

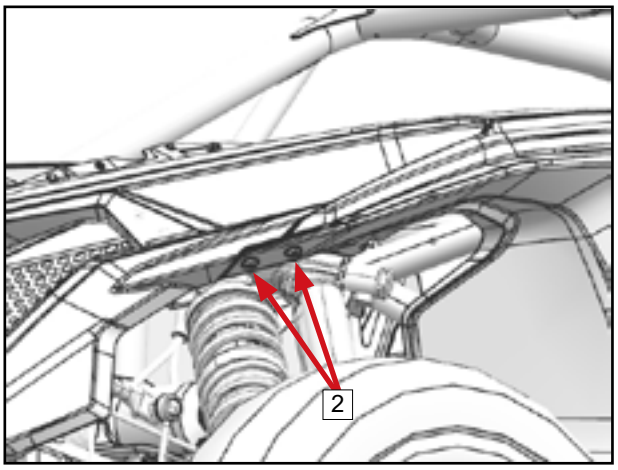

Unplug the 3 grommet pins 3.
Detach clasp 4.
Follow the direction of the clasp 5.
Remove the front LH panel 6.

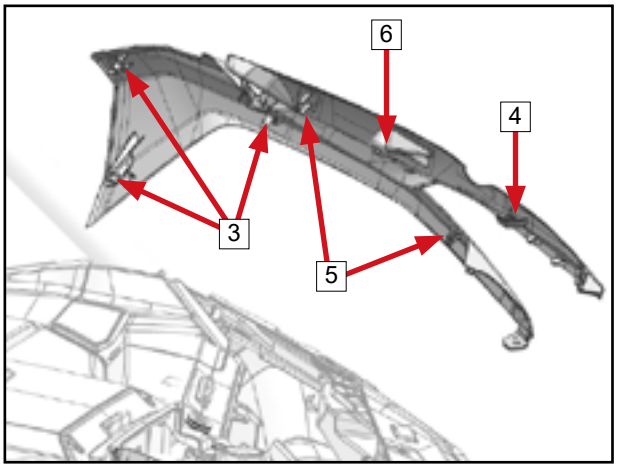

Installation

Reverse the removal procedures for installation.

6.2.2 Front RH Panel

Removal

Remove the fuel tank cap 1.
Remove the 6 bolts 2.
The remaining removal procedures are the same as front LH panel (See section 6.2.1).
Remove the front RH panel 3.

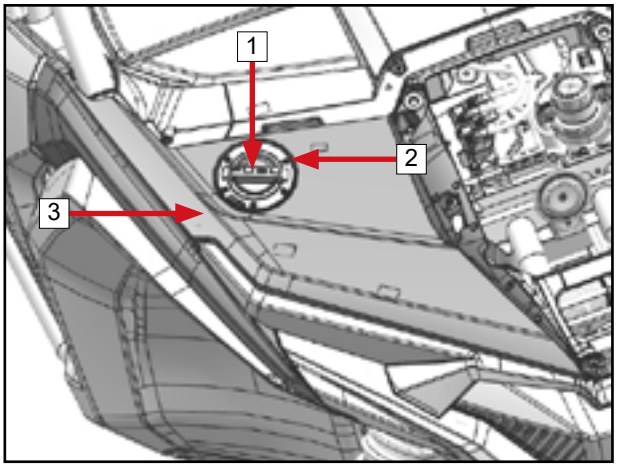

Installation

Reverse the removal procedures for installation.

© CFMOTO Powersports, Inc. This manual is subject to all applicable copyright laws. Reproduction or duplication in any form, whole or in part, is strictly prohbited.

6.3 Fender Flare (Select Markets)

6.3.1 Front LH/RH Fender Flare

Removal

Remove the inner plastic clasp assemblies 1.

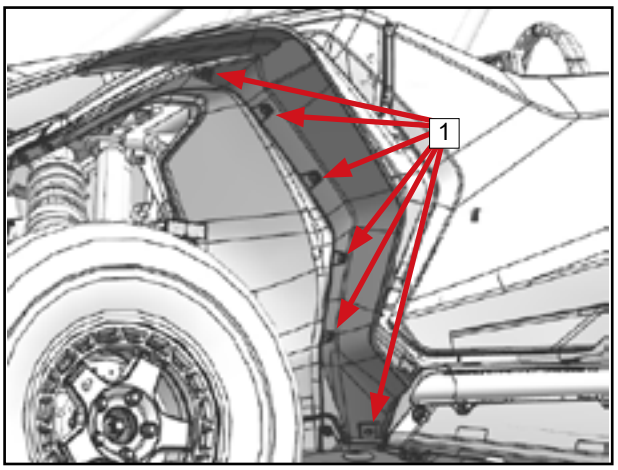

Remove the outer plastic clasp assemblies 2.

Remove front LH Fender Flare 3.

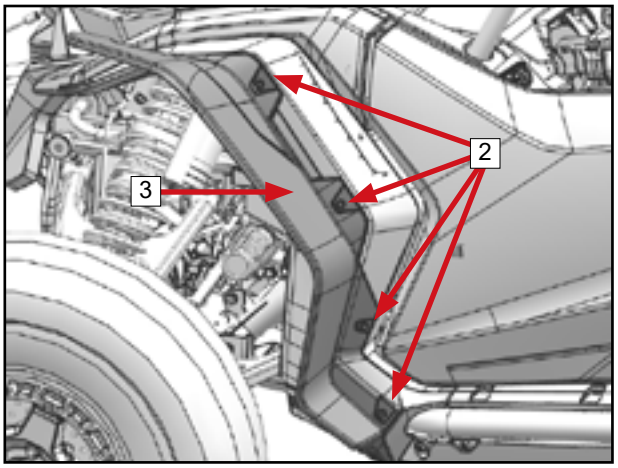

Remove front RH Fender Flare in the same way as front LH Fender Flare.

Installation

Reverse the removal procedures for installation.

6.3.2 Rear LH/RH Fender Flare

Removal

Remove the inner plastic clasp assemblies 1.

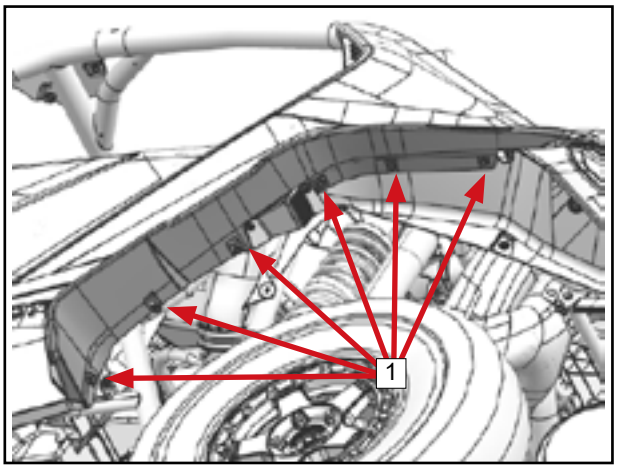

Remove the outer plastic clasp assemblies 2.

Remove rear LH Fender Flare 3.

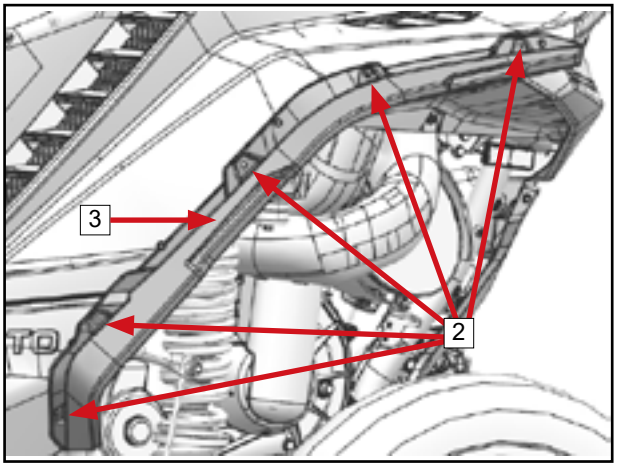

Remove the rear RH Fender Flare in the same way as the rear LH Fender Flare.

Installation

Reverse the removal procedures for installation.

© CFMOTO Powersports, Inc. This manual is subject to all applicable copyright laws. Reproduction or duplication in any form, whole or in part, is strictly prohibited.

6.4 Headlight Panel Assembly

Removal

Remove the LH and RH headlight cable plug [1].

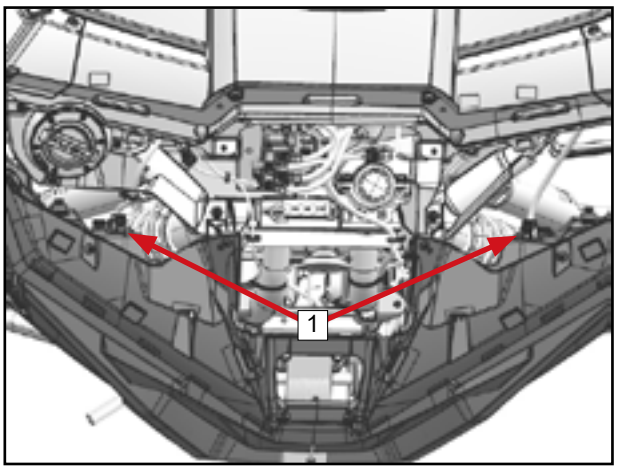

Remove two bolts [2] and two bolts [3] connected to the frame .
Remove 3 bolts [4] on the left and right sides connected to the front LH/RH deco plate.
Remove headlight panel assembly [5].

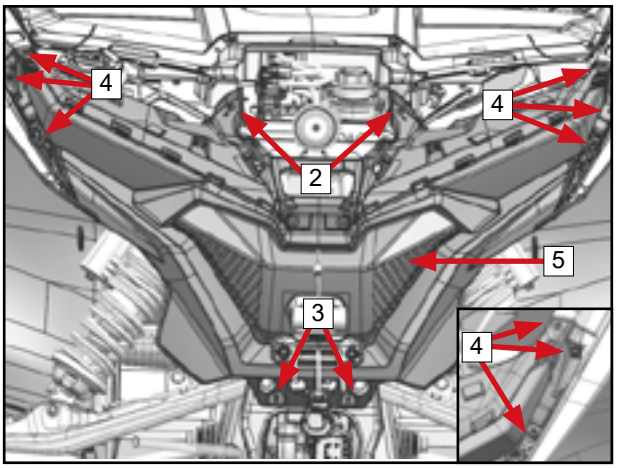

Installation

Reverse the removal procedures for installation.

6.4.1 LH/RH Headlight

6.4.1.1 Headlight Removal

Remove 5 bolts [1] (LH side shown).

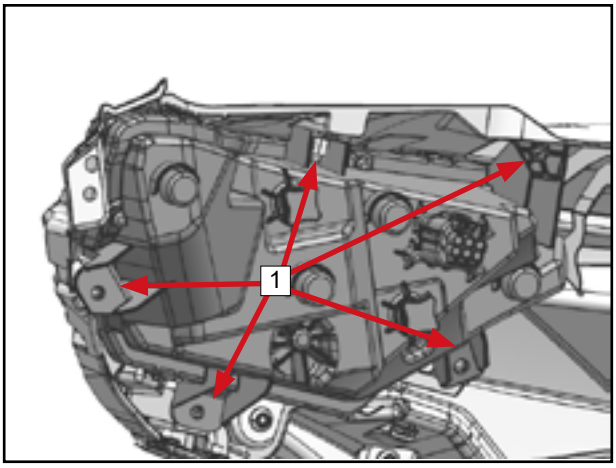

Remove LH headlight [2].
The RH headlight is removed in the same way.

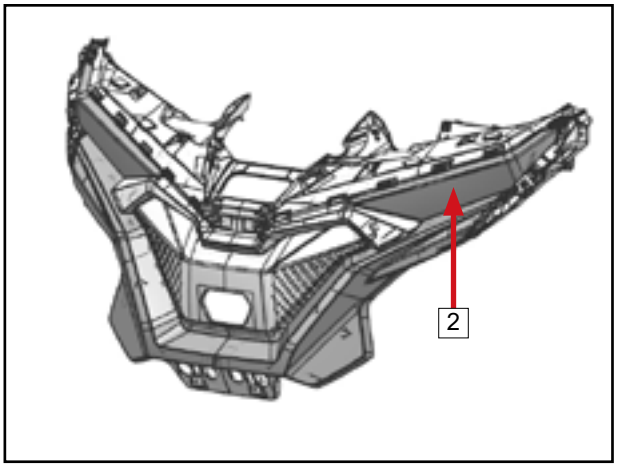

Installation

Reverse the removal procedures for installation.

© CFMOTO Powersports, Inc. This manual is subject to all applicable copyright laws. Reproduction or duplication in any form, whole or in part, is strictly prohibited.

6.4.2 Headlight Panel Deco Guard

Removal

Remove the 11 bolts 1.

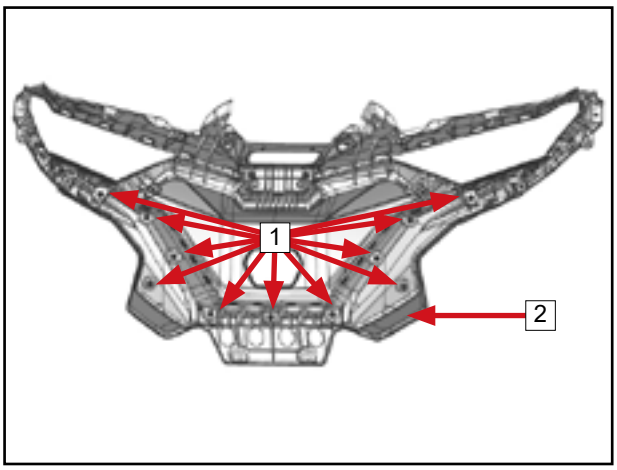

Remove LH headlight 2.

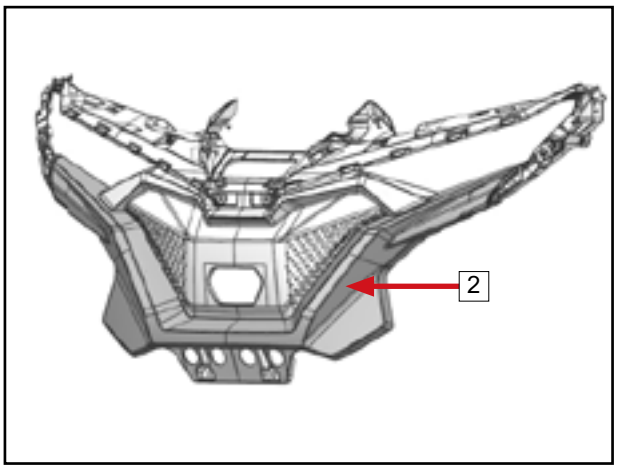

Installation

Reverse the removal procedures for installation.

6.5 Side Door Assembly

6.5.1 LH/RH Front Door

Removal

NOTE: When removing the pin, ask an assistant to help hold the side door to avoid falling and causing damage or injury.

Remove the front door cable plug 1 on the main cable (If equipped with audio - ignore if without audio). LH door shown.

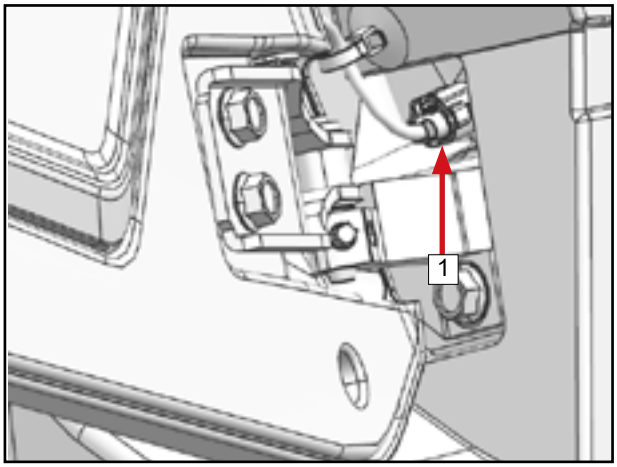

Remove two bolts 2 at the upper and lower joints of the front LH door.
Remove front LH door assembly 3.

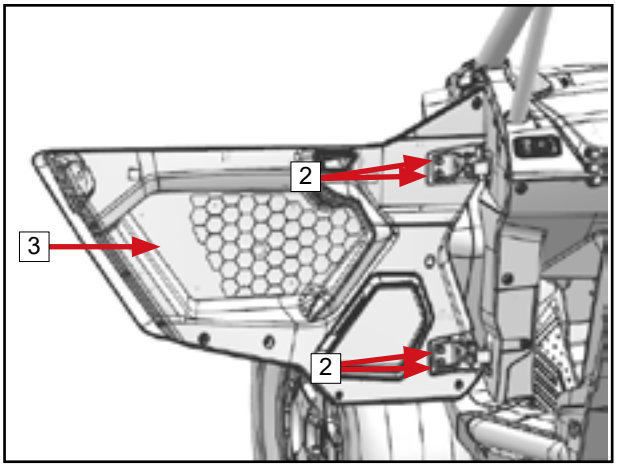

The front RH door, rear LH door, rear RH door and front LH door are removed and installed in the same way.

Installation

Reverse the removal procedures for installation.

© CFMOTO Powersports, Inc. This manual is subject to all applicable copyright laws. Reproduction or duplication in any form, whole or in part, is strictly prohibited.

6.5.2 LH/RH Front Door Armrest

Removal

Remove the bolt 1.
Remove front door armrest 2 (LH shown).

The front RH door armrest is removed and installed in the same way.

Installation

Reverse the removal procedures for installation.

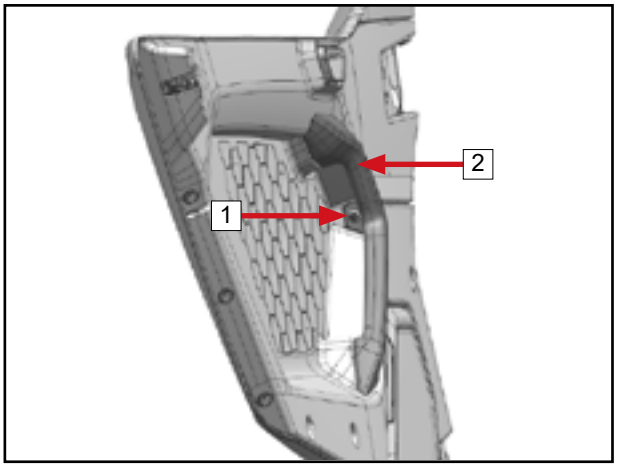

6.5.3 LH/RH Front Door Inner Deco Plate

Removal

Remove the plastic clasp assemblies 1.
Remove the bolts 2.
Remove front LH door inner deco plate 3.

The front RH door inner deco plate is removed and installed in the same way.

Installation

Reverse the removal procedures for installation.

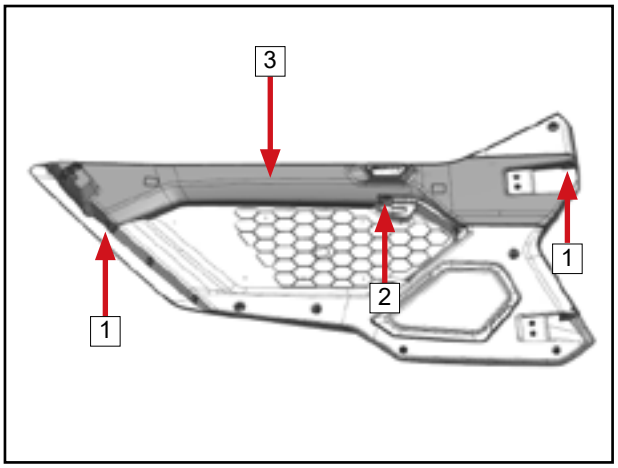

6.5.4 LH / RH Door Lock

Removal

Remove bolts 1.
Remove lock 2.
Remove front LH door lock 3.

The removal and installation methods for the front RH door lock are the same.

Installation

Reverse the removal procedures for installation.

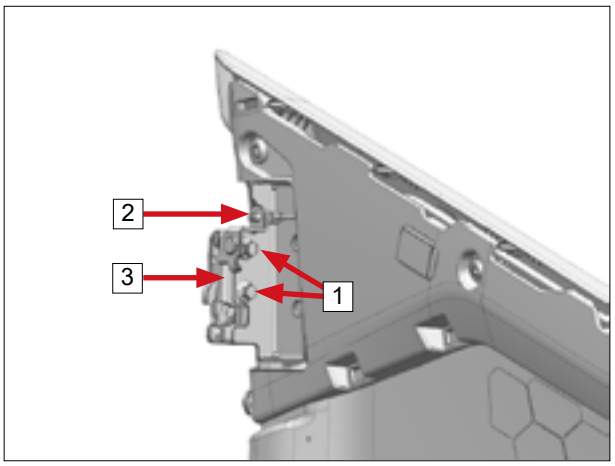

6.5.5 LH/RH Front Door Deco Plate

Removal

Remove the plastic clasp assembly 1.
Remove the bolts 2.
Remove front LH door deco plate 3.

The front RH door deco plate is removed and installed in the same way.

Installation

Reverse the removal procedures for installation.

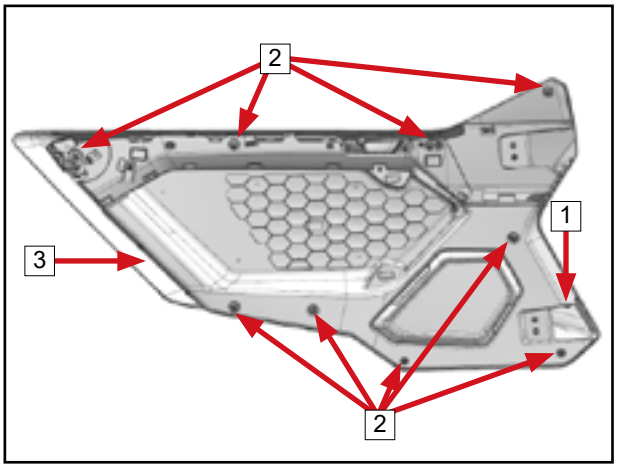

© CFMOTO Powersports, Inc. This manual is subject to all applicable copyright laws. Reproduction or duplication in any form, whole or in part, is strictly prohibited.

6.5.6 LH/RH Door Stereo Deco Plate (Status 1)

Removal

Remove the bolts 1.
Remove LH door stereo deco plate 2.

The RH door stereo deco plate is removed and installed in the same way.

Installation

Reverse the removal procedures for installation.

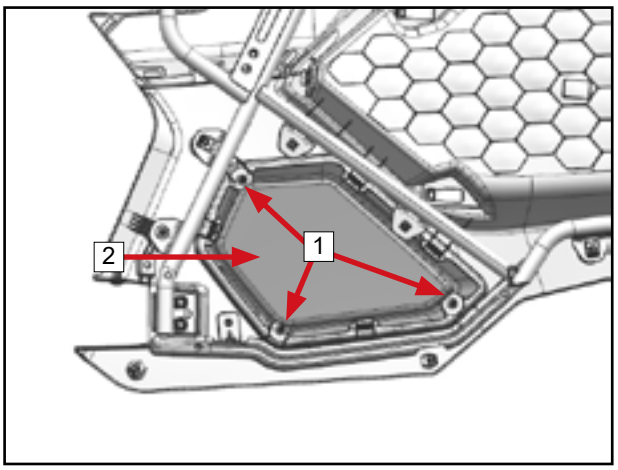

6.5.7 LH/RH Door Stereo Deco Plate (Status 2)

Removal

Disengage the four clasps 1.
Remove LH door stereo deco plate 2.

The RH door stereo deco plate is removed and installed in the same way.

Installation

Reverse the removal procedures for installation.

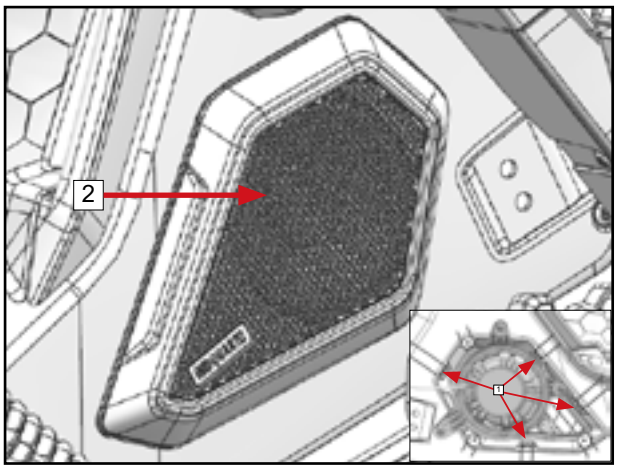

6.5.8 Audio speaker

Removal

Remove the bolts 1 .
Remove the audio speaker 2.

The removal and installation methods for the RH door speaker and the LH door speaker are the same.

Installation

Reverse the removal procedures for installation.

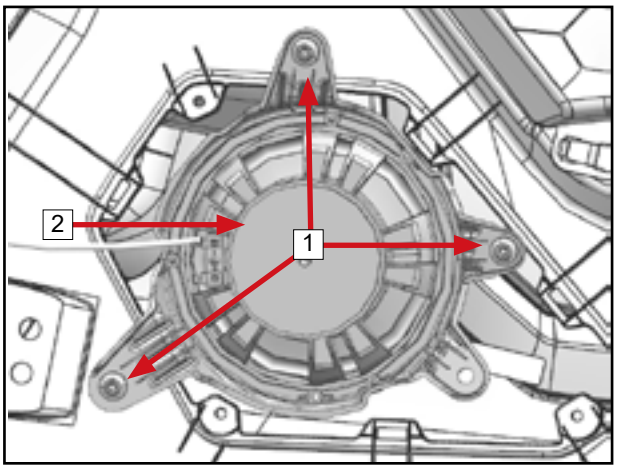

6.5.9 Hinges

Removal

Remove the bolts 1 at the joint.
Remove front left door hinge 2.

The front RH, rear LH, rear RH and front LH door hinges are removed and installed in the same way.

Installation

Reverse the removal procedures for installation.

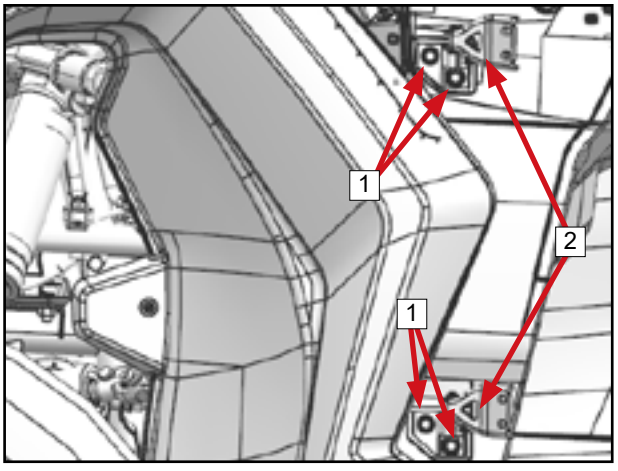

© CFMOTO Powersports, Inc. This manual is subject to all applicable copyright laws. Reproduction or duplication in any form, whole or in part, is strictly prohibited.

6.5.10 LH / RH Door Latch Hook

Removal

Remove door lock hook bolts [1].
Remove the door lock hook [2].

The removal and installation method for the front RH, rear LH, rear RH, and front LH door lock hook are the same.

Installation

Reverse the removal procedures for installation.

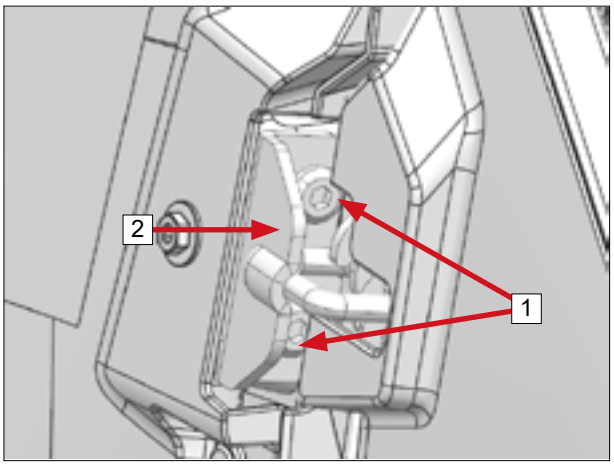

6.5.11 LH/RH Rear Door Armrest Deco Cover (Z10-4)

Removal

Remove the bolt [1].
Remove LH rear door armrest [2].

The RH rear door armrest is removed and installed in the same way.

Installation

Reverse the removal procedures for installation.

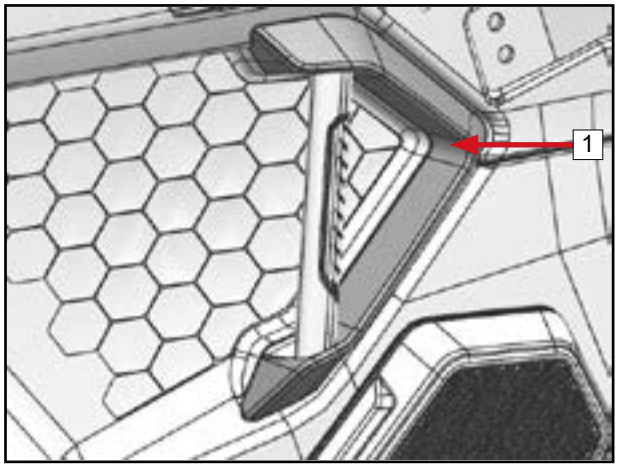

6.5.12 LH/RH Rear Door Armrest Removal (Z10-4)

Remove the bolts [1].
Remove LH rear door armrest [2].

The RH rear door armrest is removed and installed in the same way.

Installation

Reverse the removal procedures for installation.

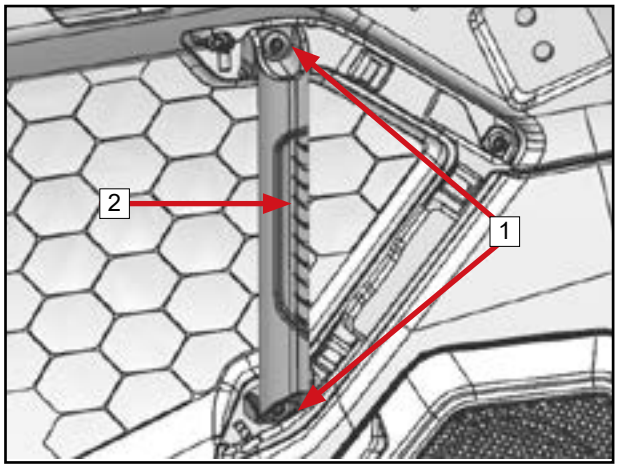

6.5.13 LH/RH Rear Door Inner Deco Plate (Z10-4)

Removal

Remove the plastic clasp assembly [1].
Remove the bolts [2].
Remove rear LH door inner deco plate [3].

The rear RH door inner deco plate is removed and installed in the same way.

Installation

Reverse the removal procedures for installation.

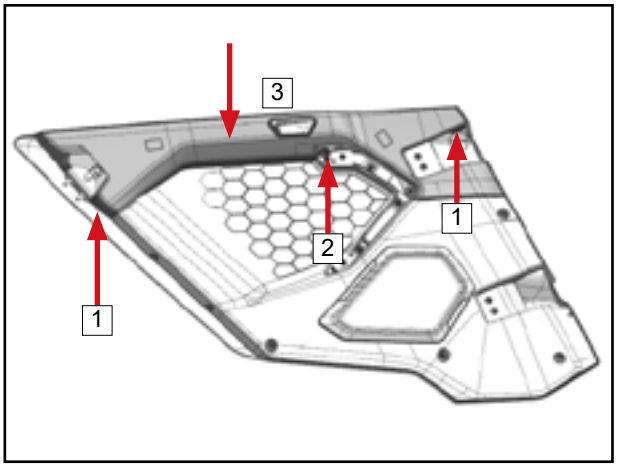

© CFMOTO Powersports, Inc. This manual is subject to all applicable copyright laws. Reproduction or duplication in any form, whole or in part, is strictly prohibited.

6.5.14 LH/RH Rear door Deco Plate (Z10-4)

Removal

Remove the plastic clasp assembly 1.
Remove the bolts 2.
Remove rear LH door deco plate 3.

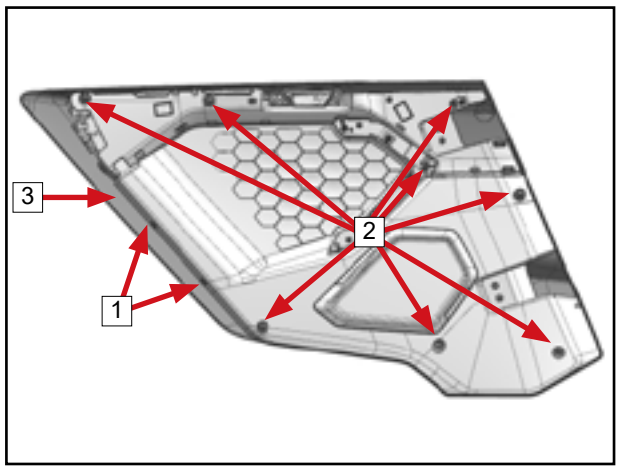

The rear RH door deco plate is removed and installed in the same way as the rear LH door deco plate.

Installation

Reverse the removal procedures for installation.

6.6 Seat

6.6.1 Driver Seat Assembly

NOTE: The disassembly method for the left rear passenger seat of the Z10-4 is the same as the driver seat.

Removal

Pull up the seat cushion 1 in the direction shown in the picture.

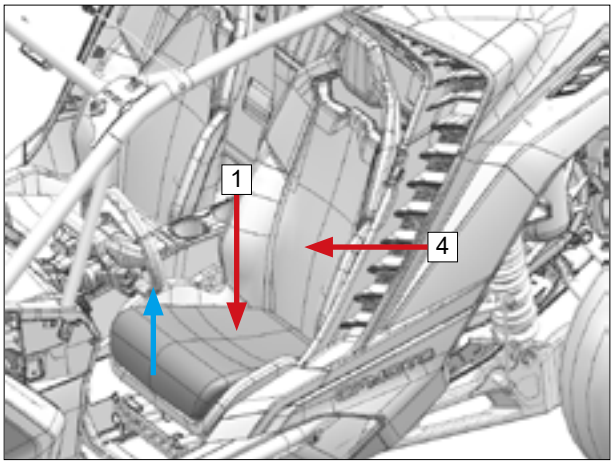

Remove the self-adhesive cloth 2.

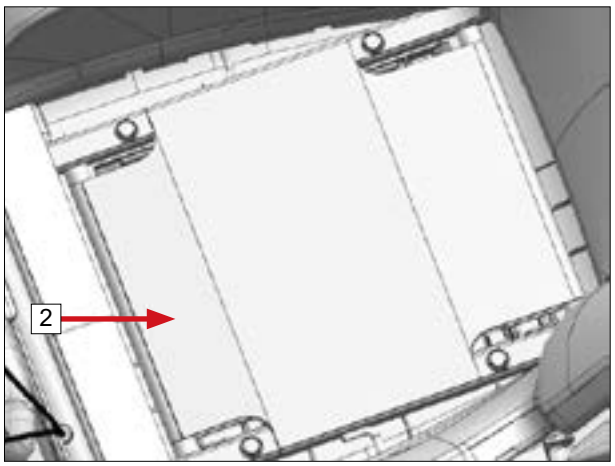

Remove the four screws 3 of seat.
Remove the seat assembly 4.

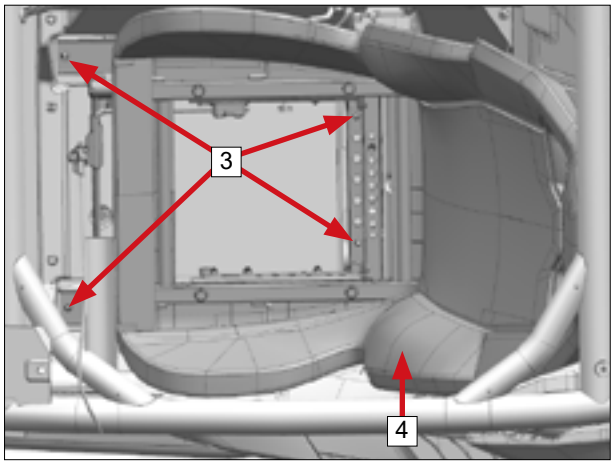

Installation

Reverse the removal procedures for installation.

© CFMOTO Powersports, Inc. This manual is subject to all applicable copyright laws. Reproduction or duplication in any form, whole or in part, is strictly prohbited.

6.6.2 Passenger Seat

NOTE: The removal method for the right rear seat in the Z10-4 is the same as that for the Z10 passenger seat.

Removal

Remove the seat cushion (See section 6.6.1).

Pull the unlock strap [1], lift it up and remove the passenger seat [2].

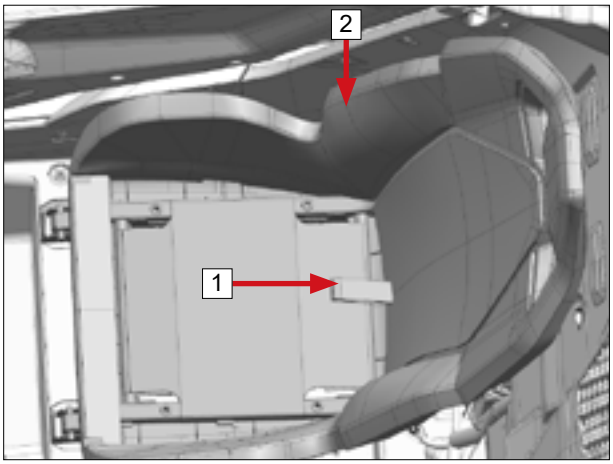

Installation

Reverse the removal procedures for installation.

6.7 Safety Belt Assembly

6.7.1 Safety Belt Buckle

Removal

Remove the bolt [1].

Remove safety belt buckle assembly [2] (Passenger side shown).

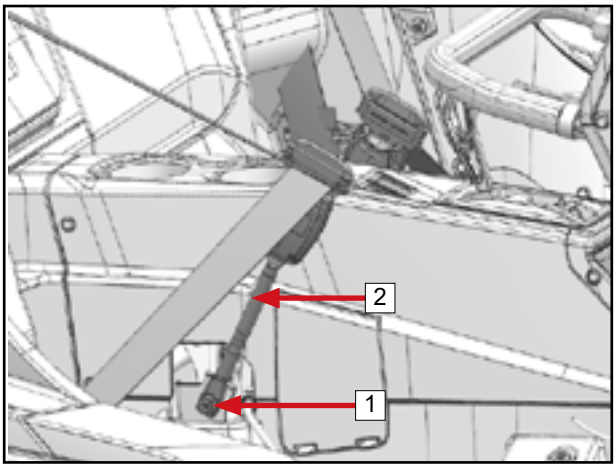

The driver safety belt buckle [3] and rear safety belt buckles [4] (Z10-4) are removed in the same way.

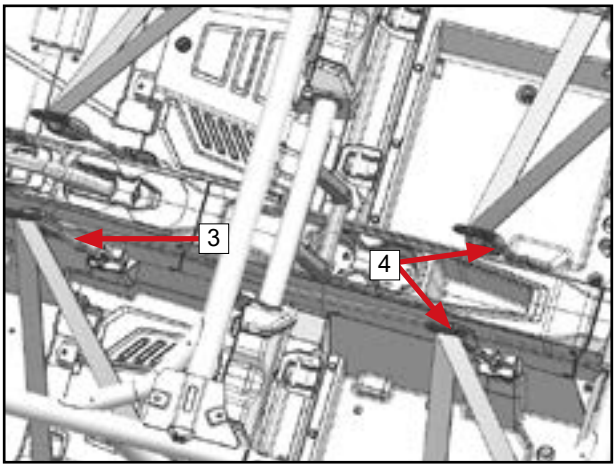

Installation

Reverse the removal procedures for installation. Torque the fasteners to specification (See Chapter 02).

6.7.2 Safety Belt

Removal

Remove the RH safety belt bolt (nut, washer) [1].

Remove the LH safety belt bolt (nut, washer) [2].

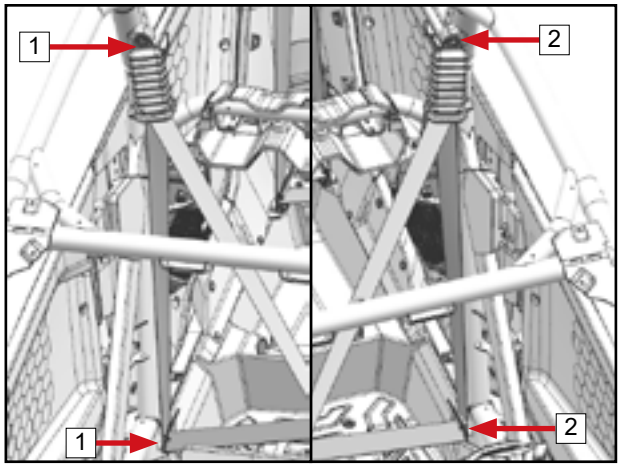

The removal procedure for Z10-4 second row safety belts is the same.

Installation

Reverse the removal procedures for installation. Torque the fasteners to specification (See Chapter 02).

© CFMOTO Powersports, Inc. This manual is subject to all applicable copyright laws. Reproduction or duplication in any form, whole or in part, is strictly prohibited.

NOTE: 1. The driver safety belt buckle is equipped with a safety warning plug-in cable. When removing the buckle assembly, unplug the connector first.
2. Pull out belt webbing quickly, and replace belt reel if belt reel fails, does not lock, or if reel does not return when webbing is released.
3. If the buckle assembly fails to function, replace the seat belt assembly.

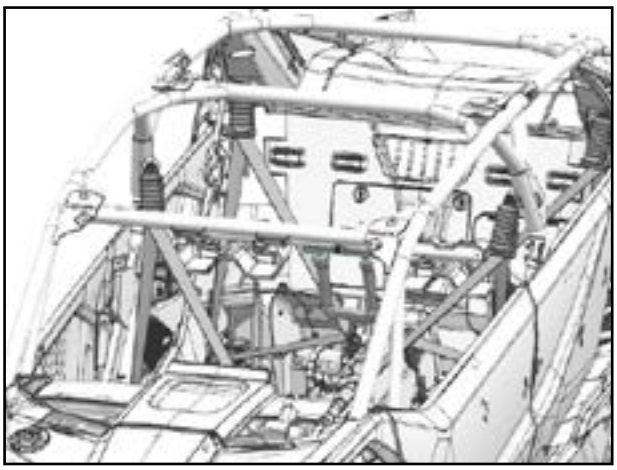

Safety Belt Inspection

1. Inspect safety belt for cracks, wear or damage. Replace if necessary.

2. Inspect safety belt bolts for looseness. Tighten them to specification or replace with new ones if necessary.

3. Check whether the seatbelt buckle/tongue is functioning properly. If the buckle/tongue is faulty, it must be replaced promptly.

4. Quickly pull the seatbelt to test whether it locks properly. If it does not, the seatbelt retractor must be replaced.

Driver Seatbelt Buckle Inspection

When lock-tongue does not insert lock catch, the indicator turns on and the vehicle speed is limited to 25 km/h.
When the lock-tongue is inserted into the lock, the indicator turns off and the vehicle speed limit function is deactivated.

If an anomaly occurs:

1. Use a multimeter to check the switch connector. If it does not conduct, replace the buckle.

2. If the switch is normal and the vehicle speed limit is normal, but the dashboard display is abnormal, then check whether the dashboard ciruit is conductive and whether its function is normal. If the function is not normal, replace the dashboard.

3. If the switch is normal and the dashboard display is normal but vehicle speed limiting does not occur, then check whether the ECU function is normal. If the ECU function is abnormal, replace it.

© CFMOTO Powersports, Inc. This manual is subject to all applicable copyright laws. Reproduction or duplication in any form, whole or in part, is strictly prohbited.

6.8 LH/RH Door Sill Deco Plate

Removal

Remove the plastic clasps [1].
Remove LH door sill deco plate [2].

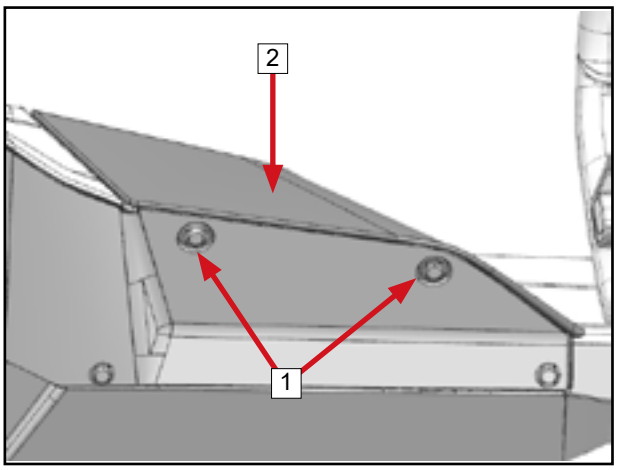

The RH sill deco plate is removed and installed in the same way as the LH deco plate.

Installation

Reverse the removal procedures for installation.

6.9 LH/RH Side Panel

Removal

Remove the bolts [1].
Remove the plastic clasp [2].
Remove the LH side panel [3].

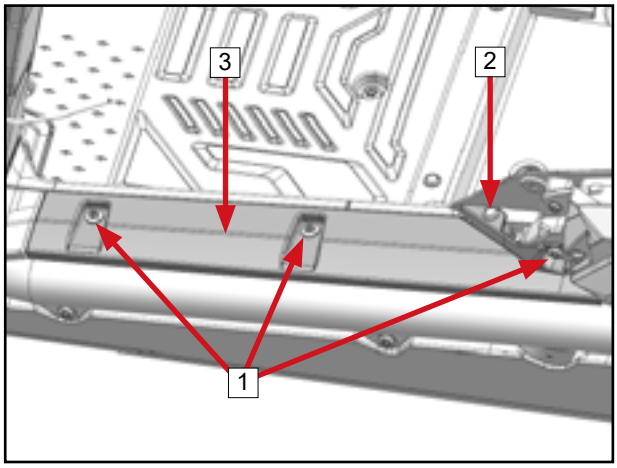

The RH side panel is removed and installed in the same way as the LH side panel.

Installation

Reverse the removal procedures for installation.

6.10 LH/RH Skid Plate

Removal

Remove the bolts [1].
Remove the bolts [2].
Remove the LH skid plate [3].

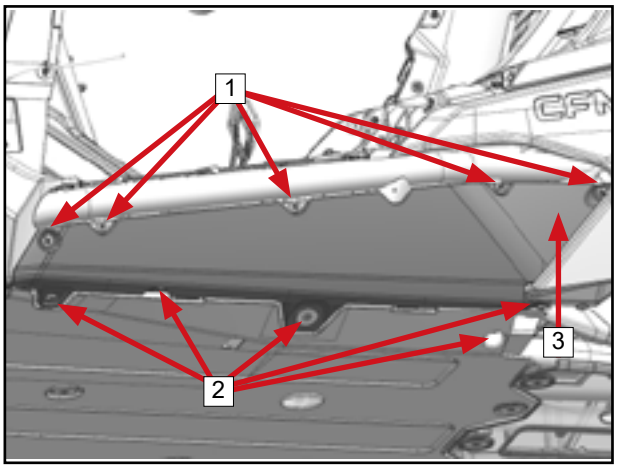

The LH/RH skid plates are removed and installed in the same way.

Installation

Reverse the removal procedures for installation.

© CFMOTO Powersports, Inc. This manual is subject to all applicable copyright laws. Reproduction or duplication in any form, whole or in part, is strictly prohbited.

6.12 LH/RH Lower Panel (Z10-4)

Removal

Remove the bolts 1.
Remove the plastic clasps 2.

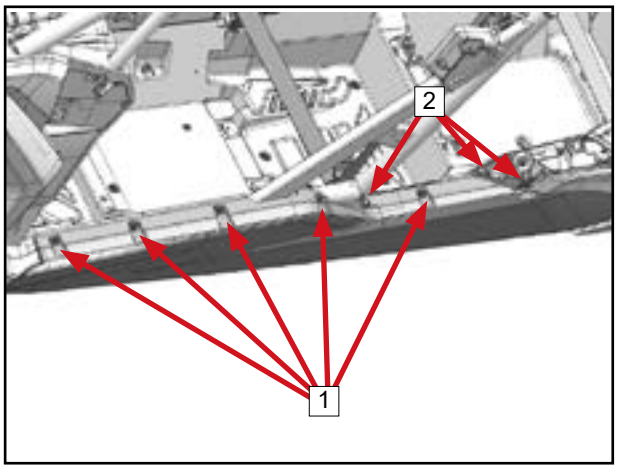

Remove the bolts 3.
Remove the plastic clasp 4.

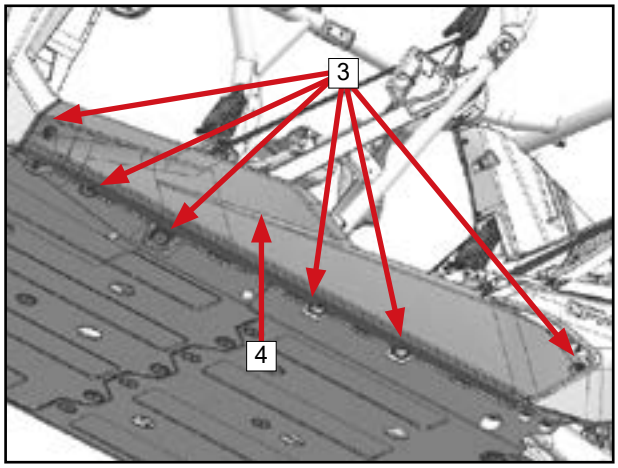

The RH lower panel and the LH are removed and installed in the same way.

Installation

Reverse the removal procedures for installation.

6.13 Front Skid Plate

Removal

Remove the bolts 1.
Remove the front skid plate 2.

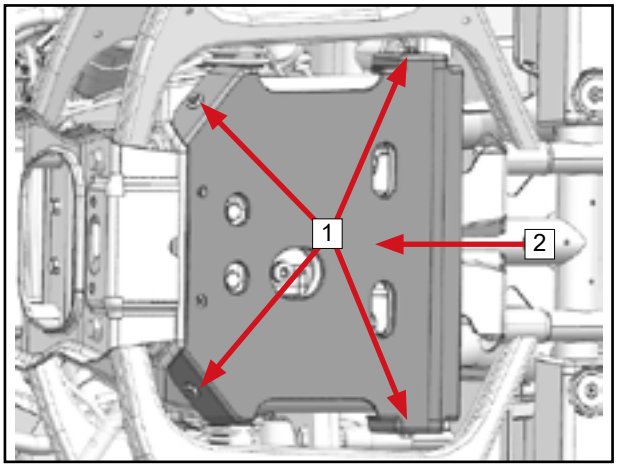

Installation

Reverse the removal procedures for installation.

6.14 Middle Skid Plate

Removal

Remove the bolts 1.
Remove the retaining washer and screw assembly 2.
Remove the middle skid plate 3.

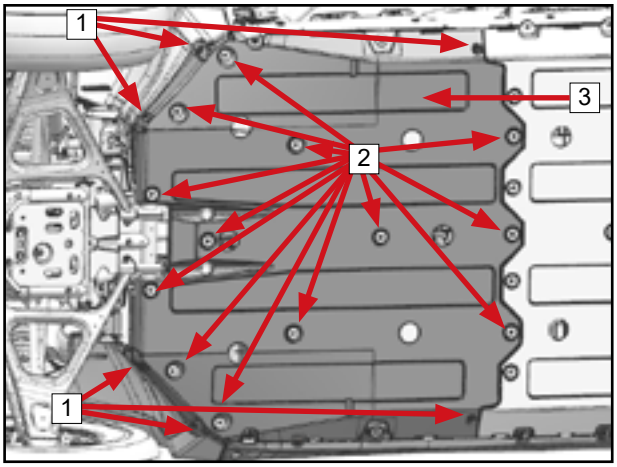

Installation

Reverse the removal procedures for installation.

© CFMOTO Powersports, Inc. This manual is subject to all applicable copyright laws. Reproduction or duplication in any form, whole or in part, is strictly prohibited.

6.15 Rear Skid Plate

Removal

Remove the retaining washer and screw assembly 1.

Remove the rear skid plate 2.

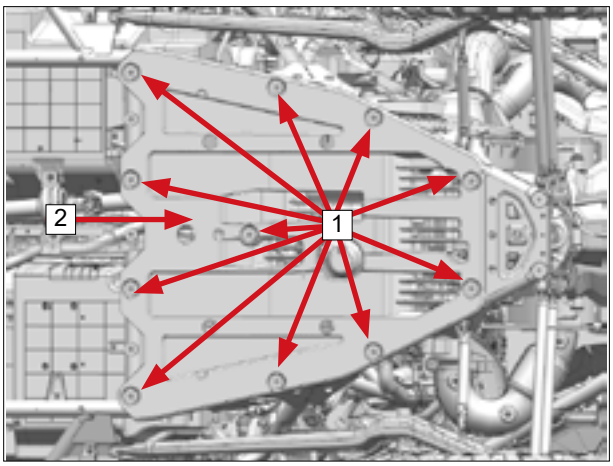

Installation

Reverse the removal procedures for installation.

6.16 Extended Skid Plate (Z10-4)

Removal

Remove the bolts 1.

Remove the retaining washer and screw assembies 2.

Remove the extended skid plate 3.

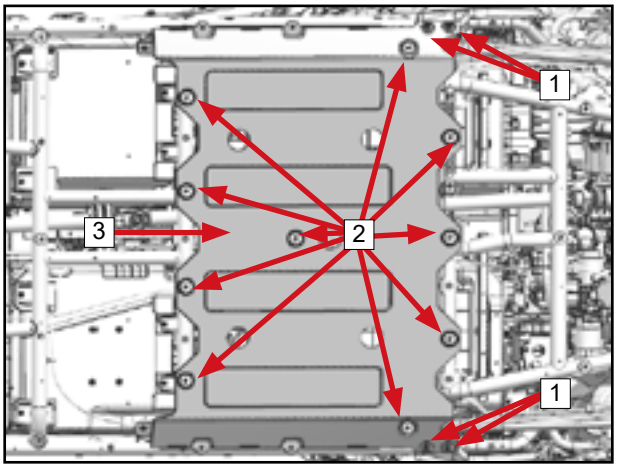

Installation

Reverse the removal procedures for installation.

6.17 EPS Cover Assembly

Removal

Remove the bolts 1.

Remove the RH plastic clasp assemblies 2.

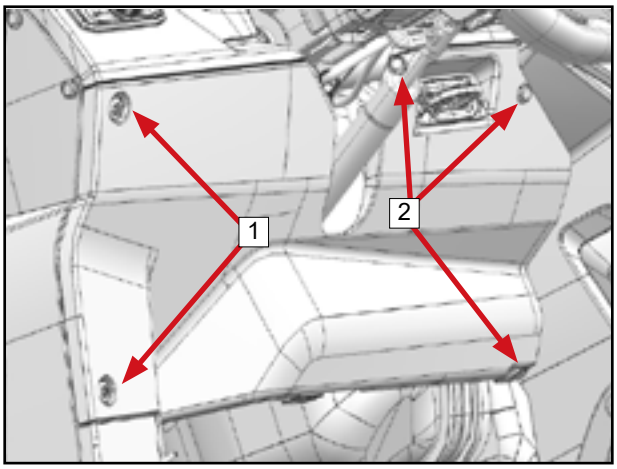

Remove the LH plastic clasp assemblies 3.

Remove EPS cover assembly 4.

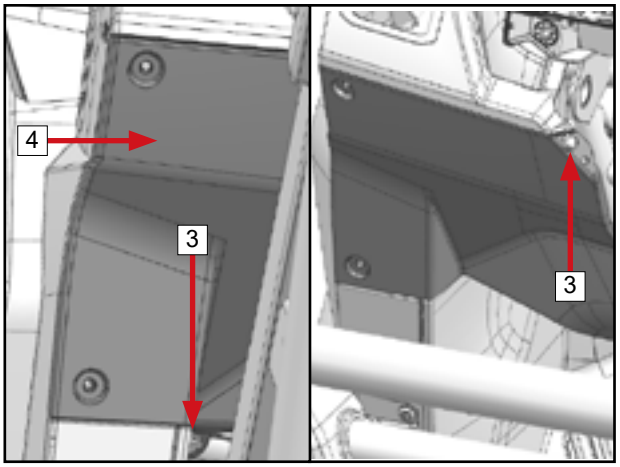

Installation

Reverse the removal procedures for installation.

© CFMOTO Powersports, Inc. This manual is subject to all applicable copyright laws. Reproduction or duplication in any form, whole or in part, is strictly prohibited.

6.18 NFC Key Reader

Removal

Remove the NFC key [1].

Remove the deco cover [2] of the NFC key reader.

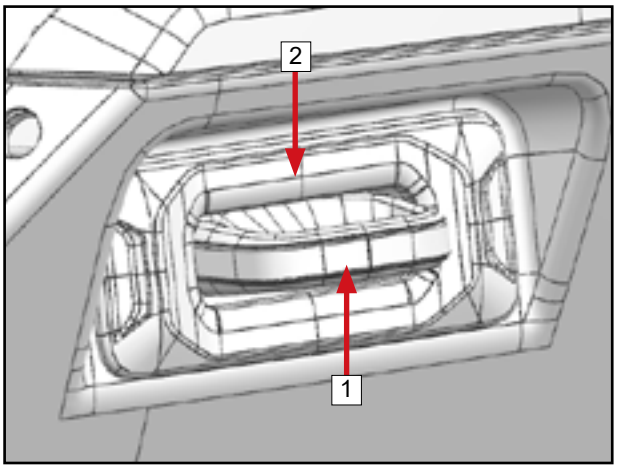

Remove the bolts [3].

Unplug the rear cable plug.

Remove the NFC key reader [4].

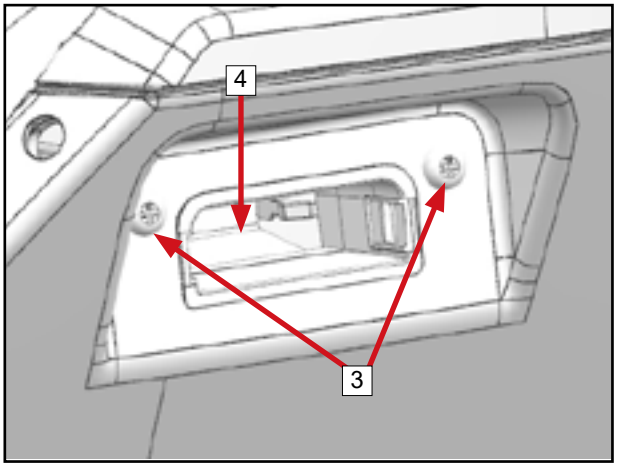

Installation

Reverse the removal procedures for installation.

6.19 Handhold Assembly

Removal

In the direction from A to B:

Loosen LH and RH handhold pipe clamp assemblies [1].

Pull out the handhold pipe assembly [2].

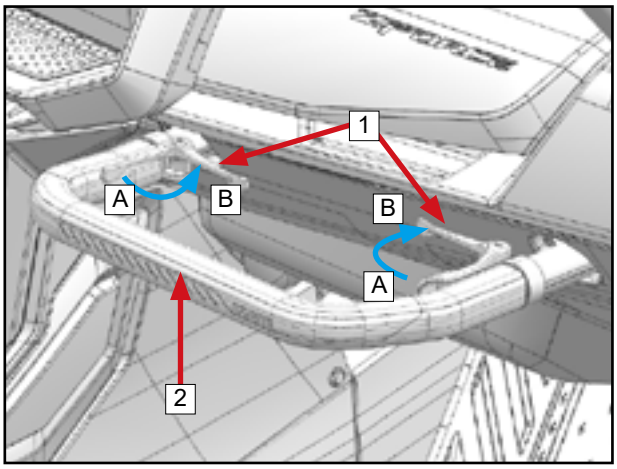

Remove the pipe bushings [3].

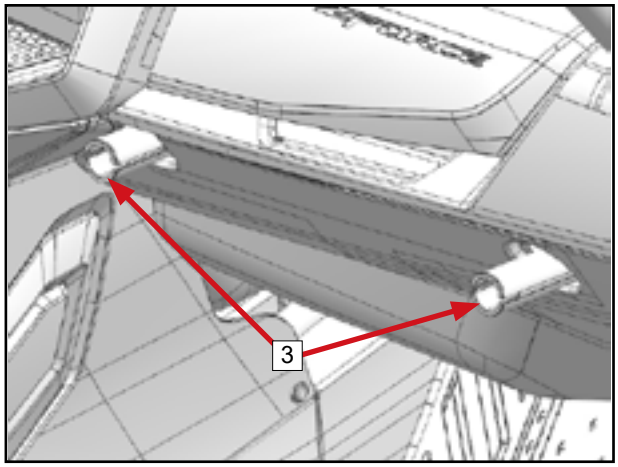

Installation

Reverse the removal procedures for installation.

© CFMOTO Powersports, Inc. This manual is subject to all applicable copyright laws. Reproduction or duplication in any form, whole or in part, is strictly prohibited.

6.20 Fuel Tank RH Cover

Removal

Remove the bolts [1].
Remove the LH plastic clasp assemblies [2].

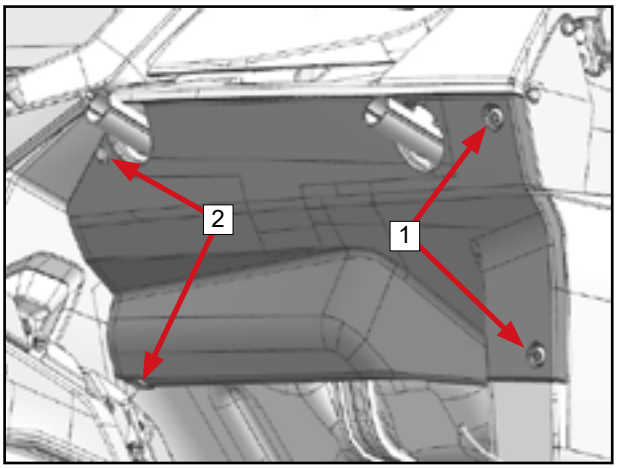

Remove the RH plastic clasp assembly [3].
Remove fuel tank RH cover [4].

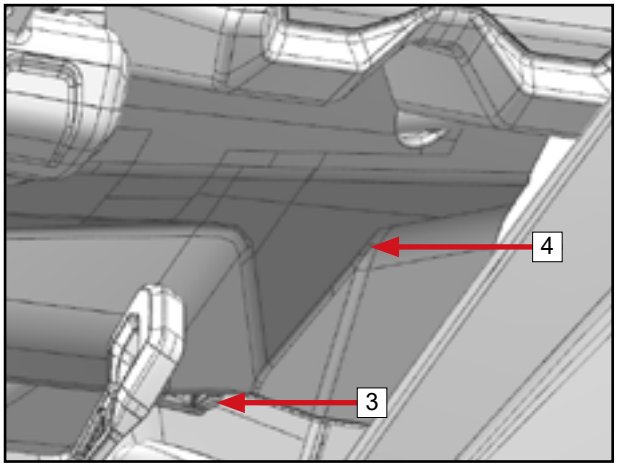

Installation

Reverse the removal procedures for installation.

6.21 Front LH/RH Deco Plate

Removal

Remove the plastic clasp assembly [1].
Remove the bolts [2].

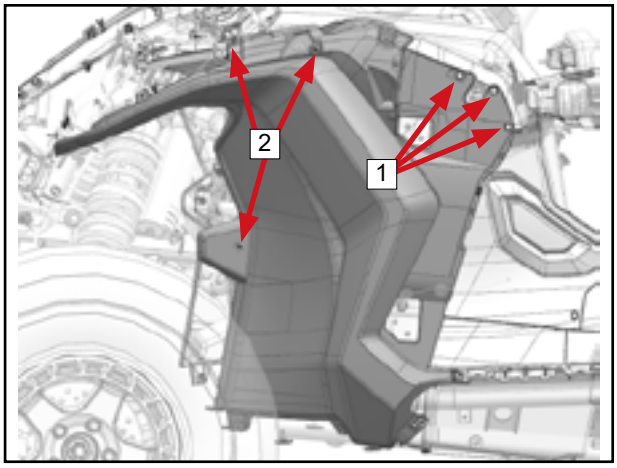

Remove the bolts [3].
Remove front LH deco plate [4].

Remove front RH deco plate as front LH deco plate.

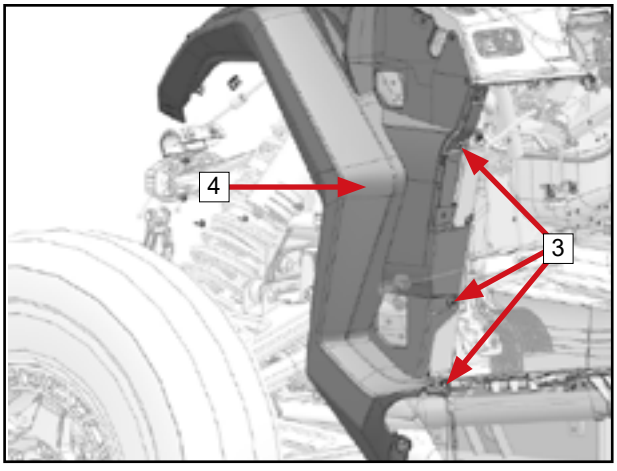

Installation

Reverse the removal procedures for installation.

© CFMOTO Powersports, Inc. This manual is subject to all applicable copyright laws. Reproduction or duplication in any form, whole or in part, is strictly prohibited.

6.22 LH/RH Audio Grid Cover (Status 1)

Removal

Remove the LH audio grid plug [1] from the clamp.

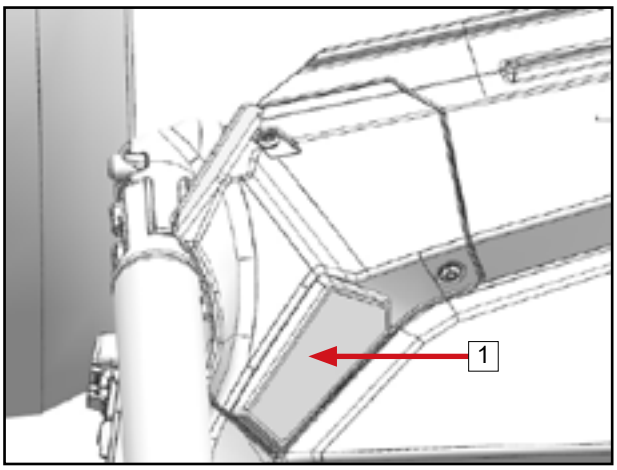

Remove the bolts [2].
Remove the LH audio grid cover [3].

The RH and LH audio grid covers are removed and installed in the same way.

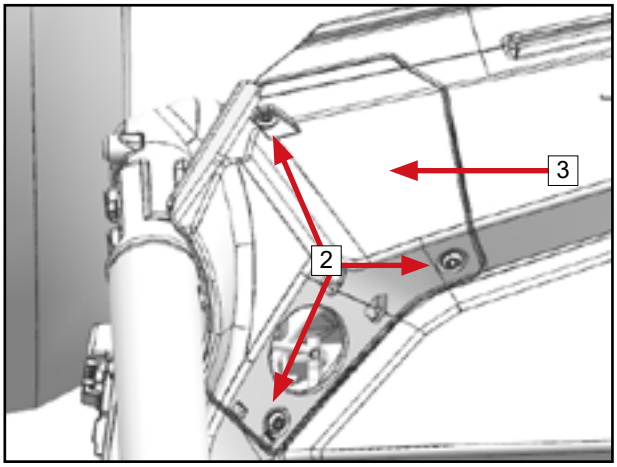

Installation

Reverse the removal procedures for installation.

6.23 LH/RH Audio Grid Cover (Status 2)

Removal

Remove the LH audio grid plug [1] from the clamp.

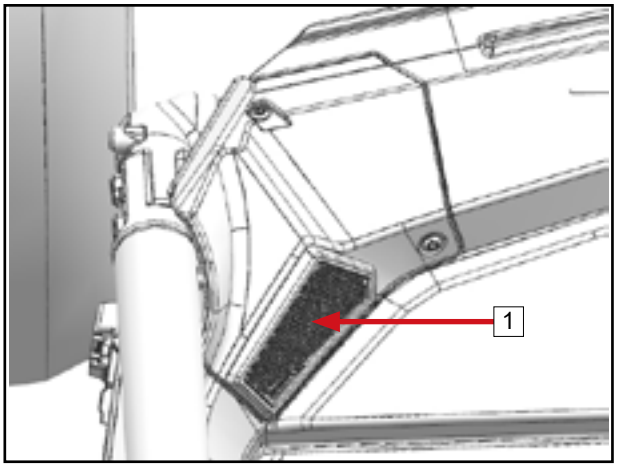

Remove the bolts [2].
Remove the LH audio grid cover [3].

The RH and LH audio grid covers are removed and installed in the same way.

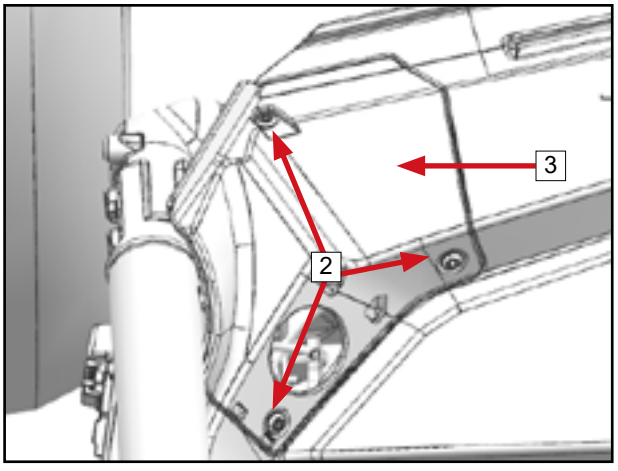

Installation

Reverse the removal procedures for installation.

© CFMOTO Powersports, Inc. This manual is subject to all applicable copyright laws. Reproduction or duplication in any form, whole or in part, is strictly prohibited.

6.24 Multi-function Steering Wheel and Steering Wheel Guard

6.24.1 Multi-function Steering Wheel

Removal

Remove the steering wheel press cover [1].

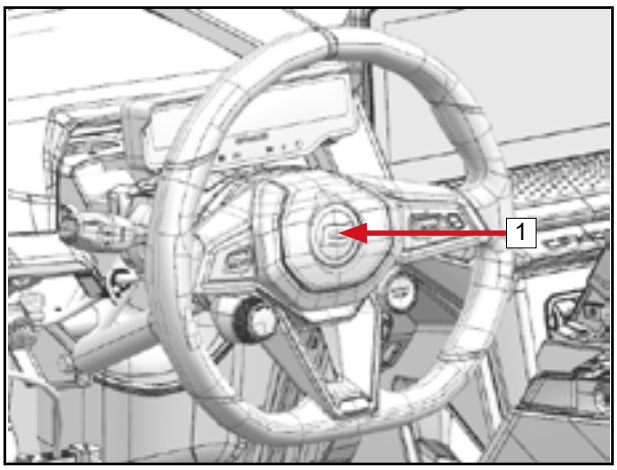

Remove the steering wheel lock nut [2].
Unplug the handlebar switch cable plugs [3].
Remove the multi-function steering wheel [4].
Pull the cable out from the steering wheel hole [5].

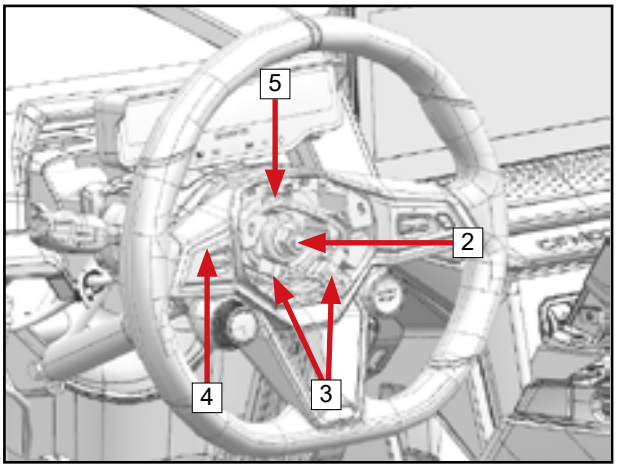

Installation

Reverse the removal procedures for installation.

Steering Wheel Lock Nut [2] Torque: 50-60 N·m

NOTE: Before installing the steering wheel, it is necessary to ensure that the clock spring is properly installed (refer to Section 6.23.2) and the steering system is centered.

6.24.2 Steering Wheel LH/RH Guard

Removal

Remove the bolts [1].

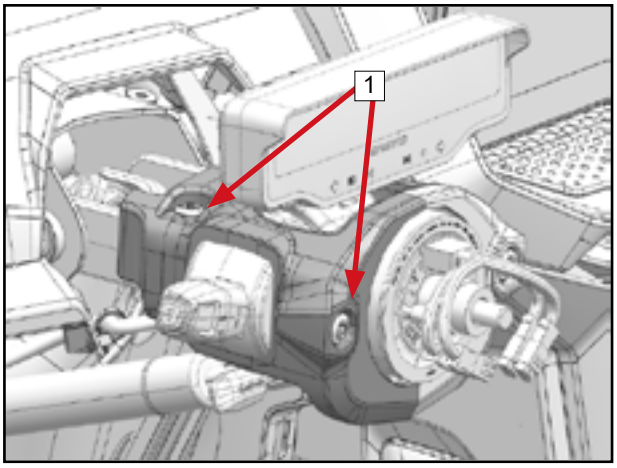

Remove the bolts [2].
Remove the LH guard [3] of the steering wheel.

Remove the RH guard in the same method as LH.

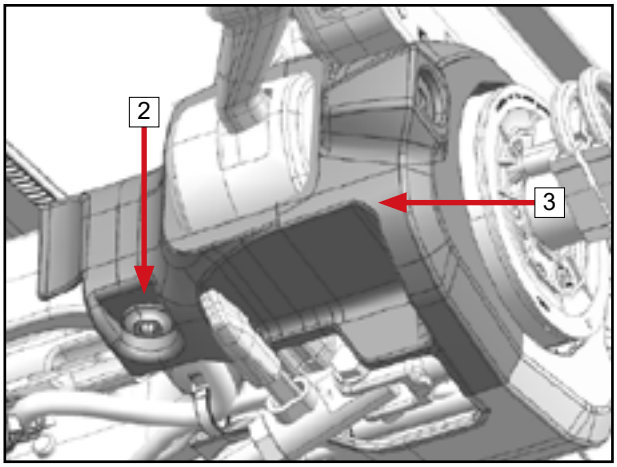

Installation

Reverse the removal procedures for installation.

© CFMOTO Powersports, Inc. This manual is subject to all applicable copyright laws. Reproduction or duplication in any form, whole or in part, is strictly prohibited.

6.25 Dashboard Assembly and Switch Group

6.25.1 Switch Group

Removal

Remove the two bolts of the switch group 1.

Remove switch group 2.

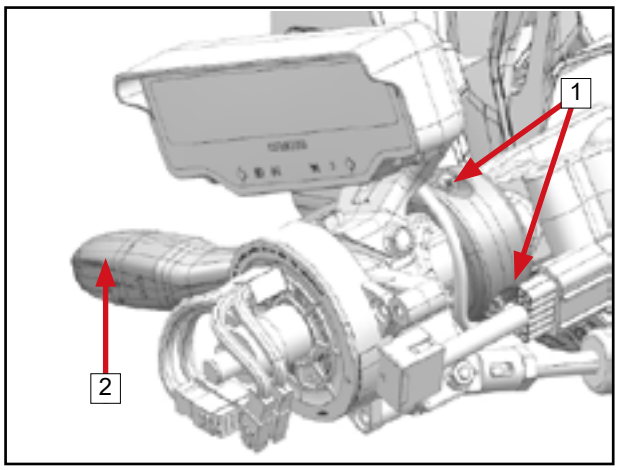

Installation

Reverse the removal procedures for installation.

6.25.2 Clock Spring

Removal

Remove the bolts 1.

Remove the clock spring 2.

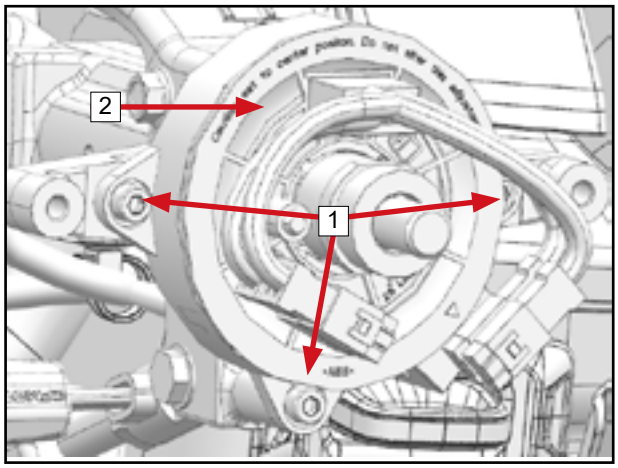

Installation

Reverse the removal procedures for installation.

NOTE:

1.Before reinstalling the clock spring, ensure that steering system is centered.

2. After the clock spring is installed, turn the "rotor" clockwise until it cannot move, then turn it counter-clockwise approximately 3 turns and align with the ▷◁ mark.

3. Keeping the clock spring aligned. pass the connectors one by one through the steering wheel in sequence.

NOTE: Do not forcefully pull the four connectors through simultaneously to avoid cable breakage

The maximum rotational torque of the clock spring is 0.15 N·m.

NOTE: If a new clock spring is being installed, step 2 is ignored. The pin 3 needs to be pulled out after installation.

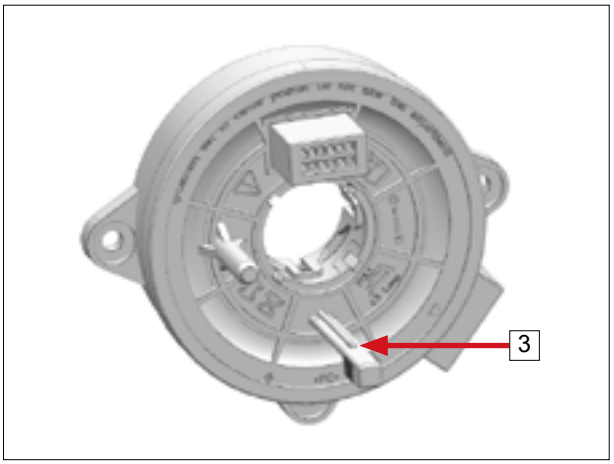

© CFMOTO Powersports, Inc. This manual is subject to all applicable copyright laws. Reproduction or duplication in any form, whole or in part, is strictly prohbited.

6.25.3 Dashboard

Removal

Remove the bolts 1.

Remove the dashboard cover 2.

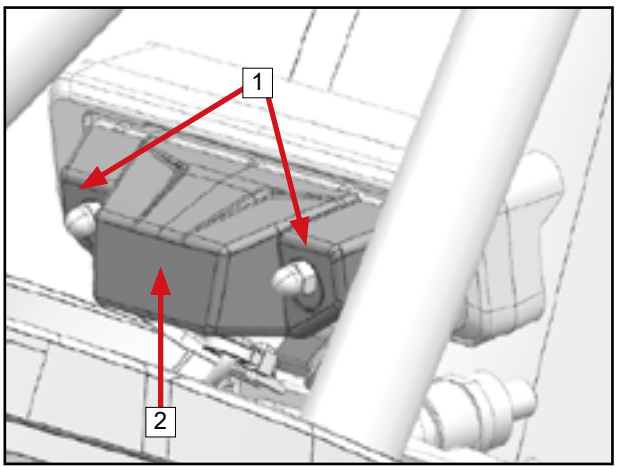

Unplug the dashboard cable plug 3.

Remove the dashboard 4.

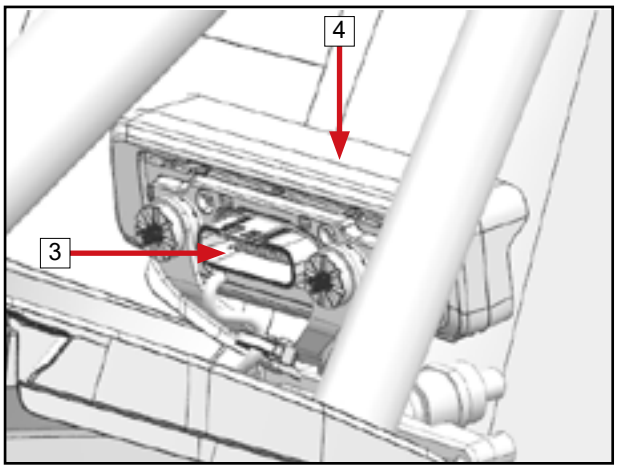

Installation

Reverse the removal procedures for installation.

6.26 Switch Service Cover

Removal

Remove the clamped switch service cover 1.

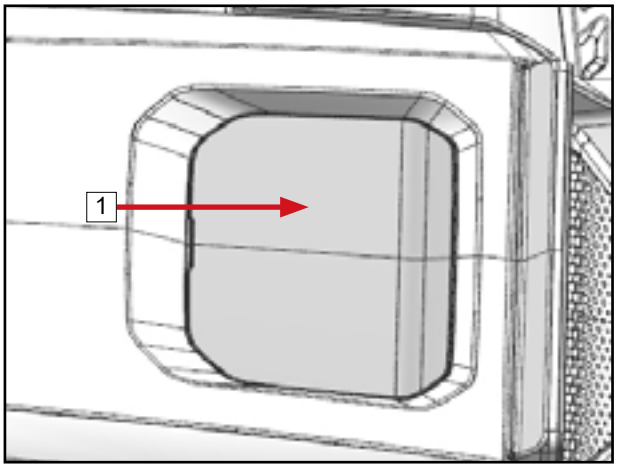

Installation

Reverse the removal procedures for installation.

6.27 Driver Storage Box Cover

Removal

Remove driver storage box cover 3 clamped to the box cover pivot .

Remove bolts 1 securing box cover pivot.

Remove the cover pivot 2.

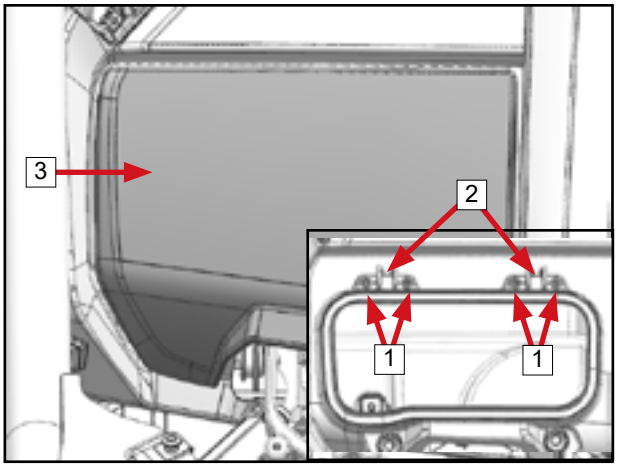

Installation

Reverse the removal procedures for installation.

© CFMOTO Powersports, Inc. This manual is subject to all applicable copyright laws. Reproduction or duplication in any form, whole or in part, is strictly prohbited.

6.28 Passenger Storage Box Cover

Removal

Remove storage box cover [3] clamped to the box cover pivot .
Remove bolts [1] securing box cover pivot.
Remove the cover pivot [2].

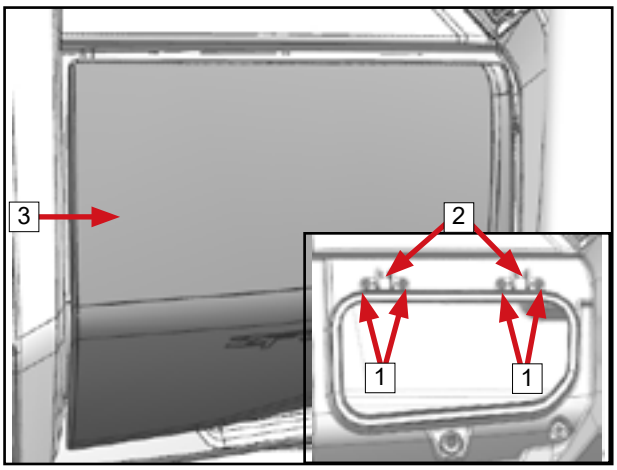

Installation

Reverse the removal procedures for installation.

6.29 Switch Panel Assembly

Removal

Remove the bolts [1].
Pull out the switch panel assembly [2] in the direction of the clamp.
Remove the cable connector at the rear of the screen.
Remove the switch panel assembly [2].

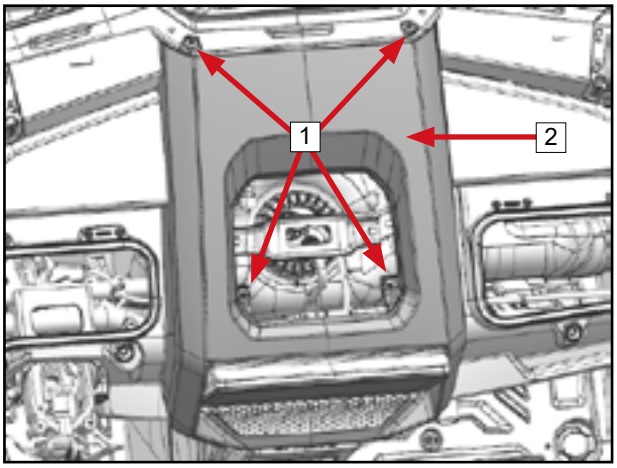

Installation

Reverse the removal procedures for installation.

6.29.1 MMI Dashboard and Dashboard Deco Cover

Removal

Remove the bolts [1].

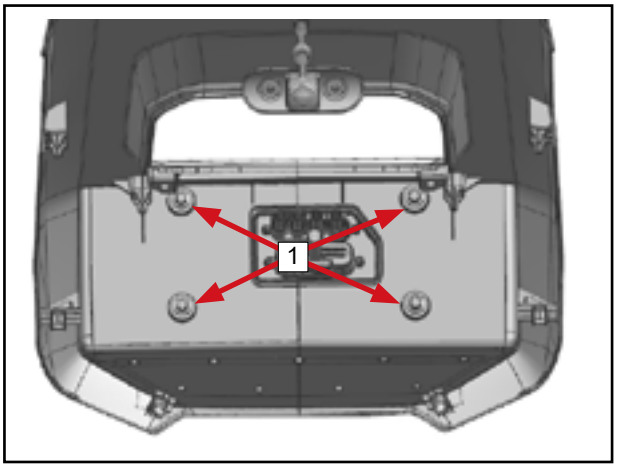

Remove the MMI dashboard [2].
Remove the dashboard deco cover [3].

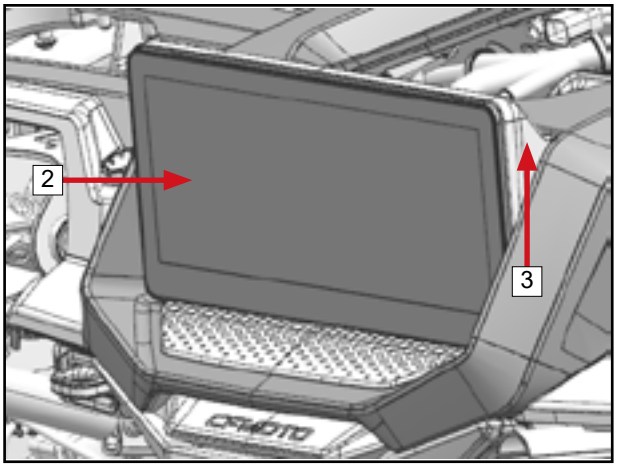

Installation

Reverse the removal procedures for installation.

© CFMOTO Powersports, Inc. This manual is subject to all applicable copyright laws. Reproduction or duplication in any form, whole or in part, is strictly prohbited.

6.30 MMI Dashboard Panel Assembly

Removal

Remove the bolts 1.
Remove switch cable plug connector at rear of panel.
Remove the panel assembly 2.

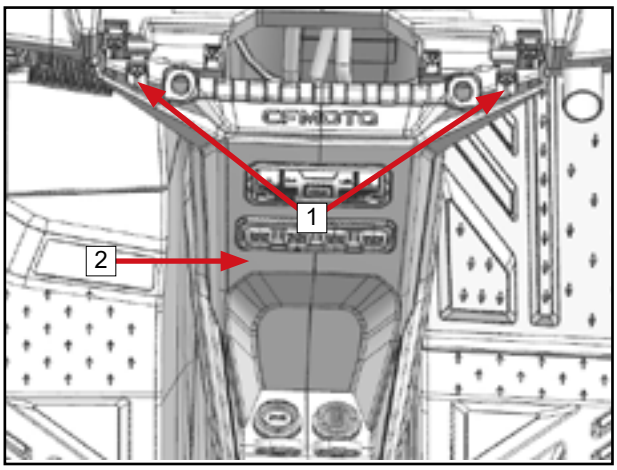

Installation

Reverse the removal procedures for installation.

6.30.1 MMI Dashboard Deco Plate and Switch

Removal

Remove the bolts 1.
Remove dashboard deco plate 2.
Remove the clamped 2/4WD switch 3.
Remove the clamped function switch 4.

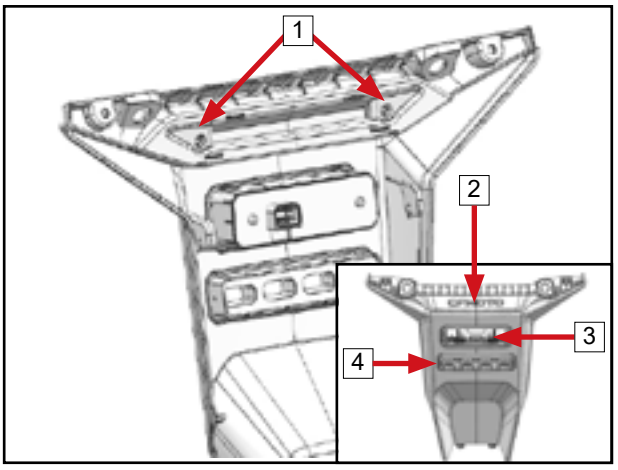

Installation

Reverse the removal procedures for installation.

6.31 LH/RH Cover Assembly

Removal

Remove the bolts 1.
Remove the plastic clasp assemblies 2.

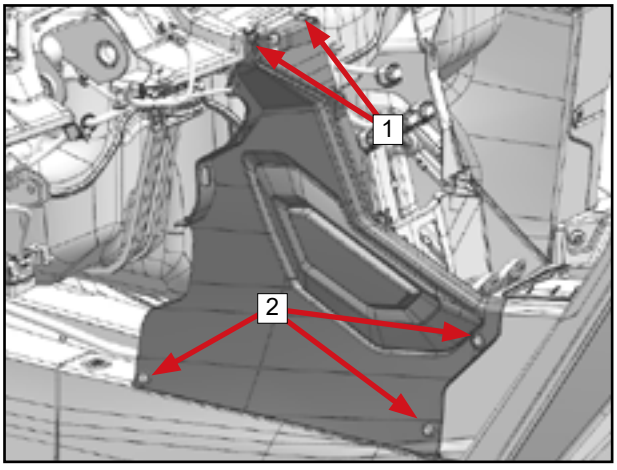

Remove the bolt 3.
Remove LH cover assembly 4.

Remove the RH cover the same way as the LH.

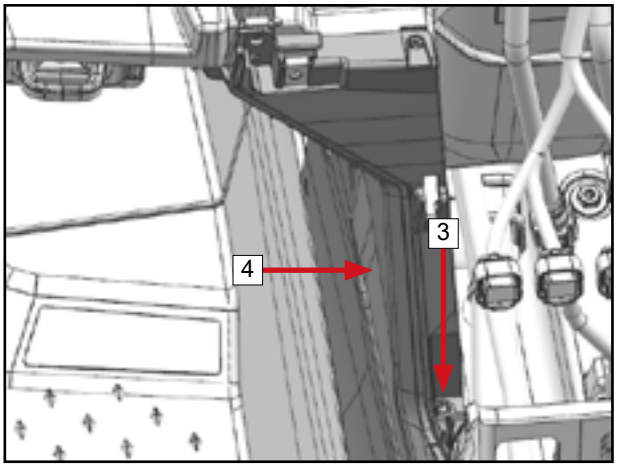

Installation

Reverse the removal procedures for installation.

© CFMOTO Powersports, Inc. This manual is subject to all applicable copyright laws. Reproduction or duplication in any form, whole or in part, is strictly prohibited.

6.31.1 Middle Cover LH/RH Deco Plate

Removal

Remove the bolts [1].
Remove middle cover LH deco plate [2].

Remove the middle cover RH deco plate in the same way as the LH.

Installation

Reverse the removal procedures for installation.

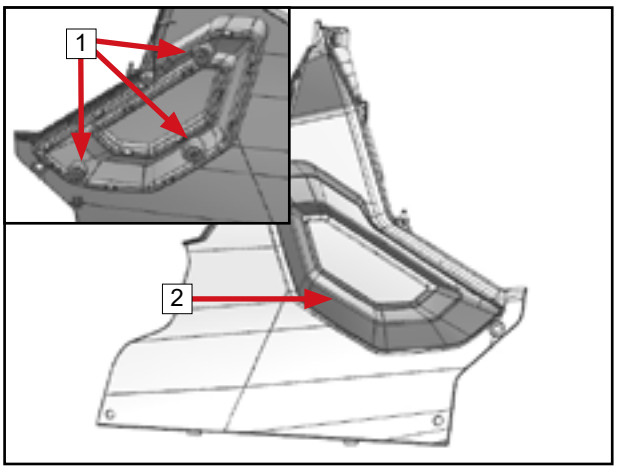

6.32 Gearshift Adjustment Cover

Removal

Lift the clamps [1] of the gearshift adjustment cover and pull outward.
Remove the gearshift adjustment cover [2].

Installation

Reverse the removal procedures for installation.

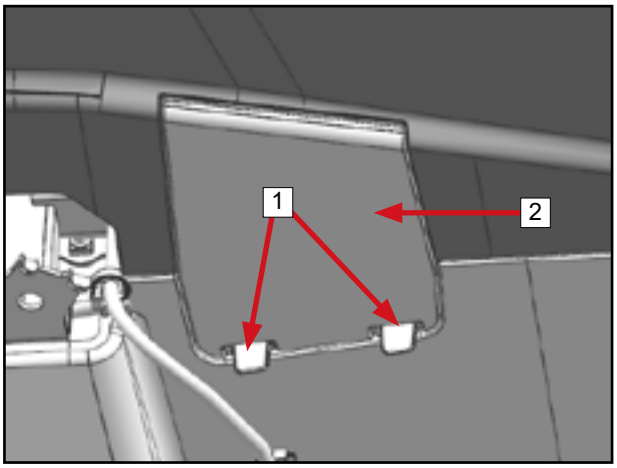

6.33 Middle Cover

Removal

Remove the LH bolt [1].
Remove the LH plastic clasp assemblies [2].

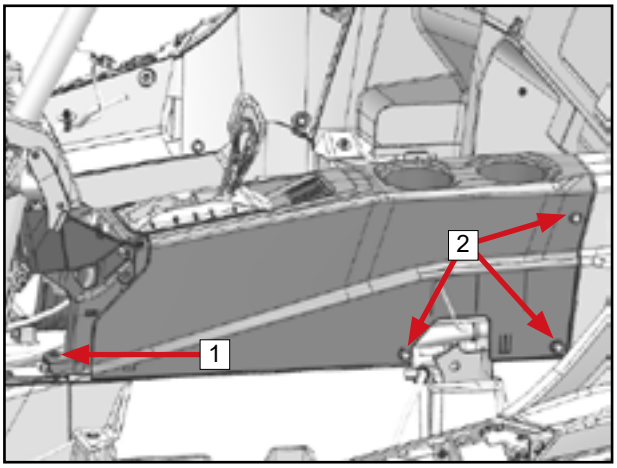

Remove the RH side bolt [3].
Remove the upper bolt [4].
Remove the RH plastic clasp assemblies [5].
Remove the USB and power cable plug connectors [6].
Remove the middle cover [7].

Installation

Reverse the removal procedures for installation.

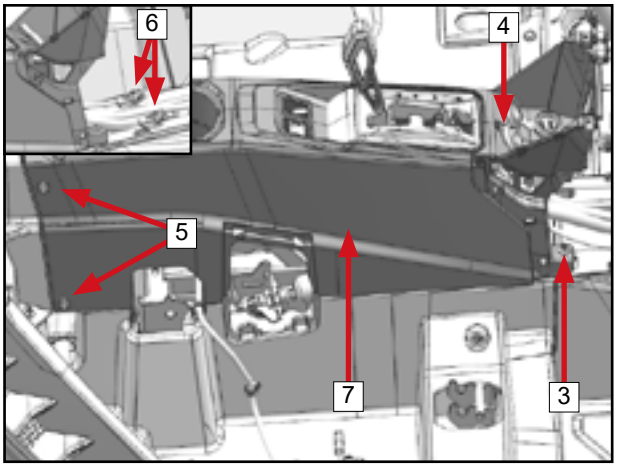

© CFMOTO Powersports, Inc. This manual is subject to all applicable copyright laws. Reproduction or duplication in any form, whole or in part, is strictly prohibited.

6.34 Rear Middle Cover (Z10-4)

Removal

Remove the bolts 1.

Remove the LH plastic clasp assemblies 2. (RH plastic clasp removal is the same as LH)

Remove the rear middle cover 3.

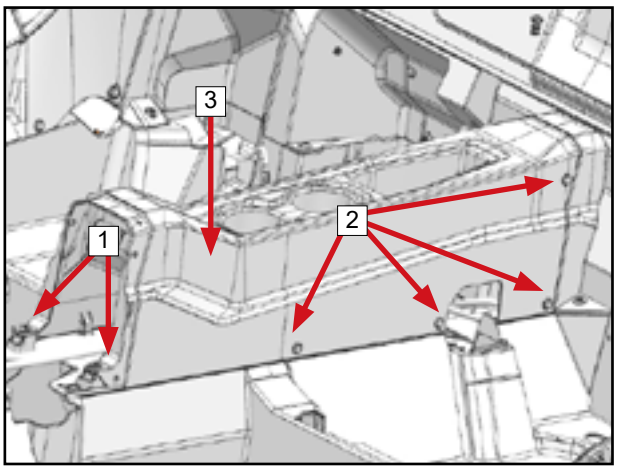

Installation

Reverse the removal procedures for installation.

6.35 Gearshift Mechanism

Removal

Remove cotter pin and pin shaft 1 to disengage the cable and shift mechanism.

Remove the bolts 2.

Remove the shift mechanism 3.

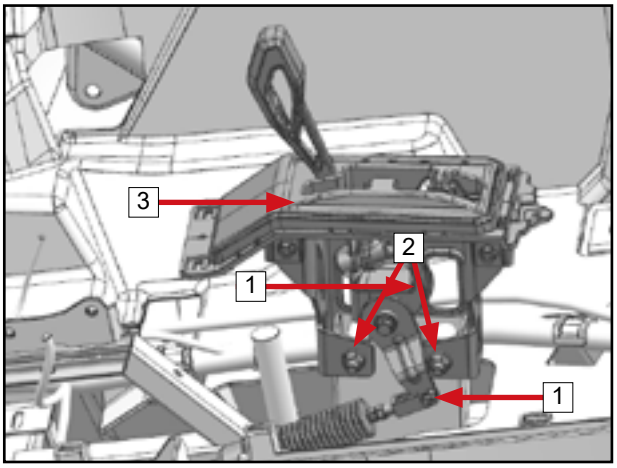

Installation

Reverse the removal procedures for installation.

6.36 Cab LH/RH Connector

Removal

Unplug the LH connector 1 of the cab.

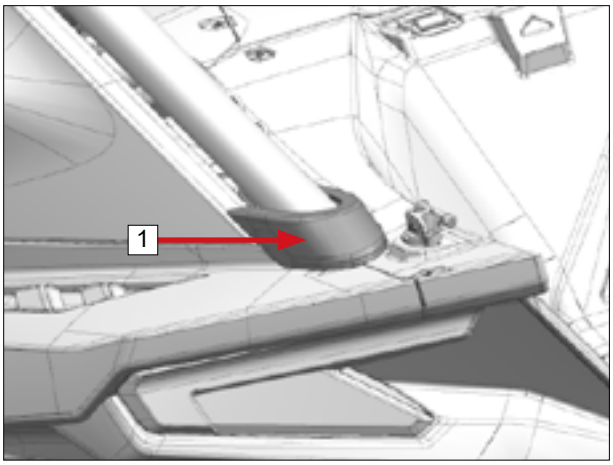

The cab RH connector is removed and installed in the same way as the LH.

Installation

Reverse the removal procedures for installation.

6.37 Rear Cargo Box Assembly

Removal

Remove the bolts 1.

Remove cargo box hooks 2.

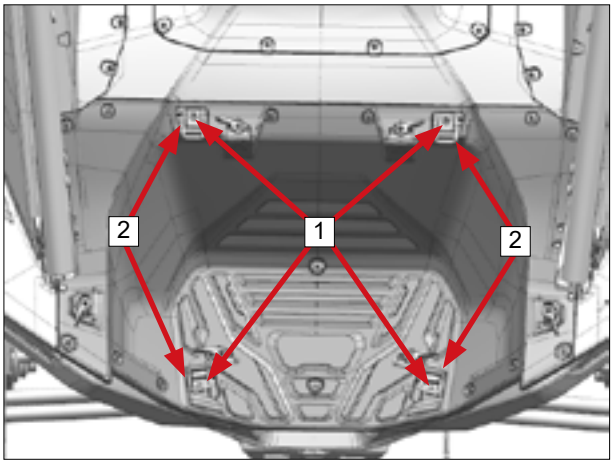

© CFMOTO Powersports, Inc. This manual is subject to all applicable copyright laws. Reproduction or duplication in any form, whole or in part, is strictly prohibited.

Remove the bolts [3].
Remove clamp assembly [4].
Remove rear cargo box assembly [5].

Installation
Reverse the removal procedures for installation.

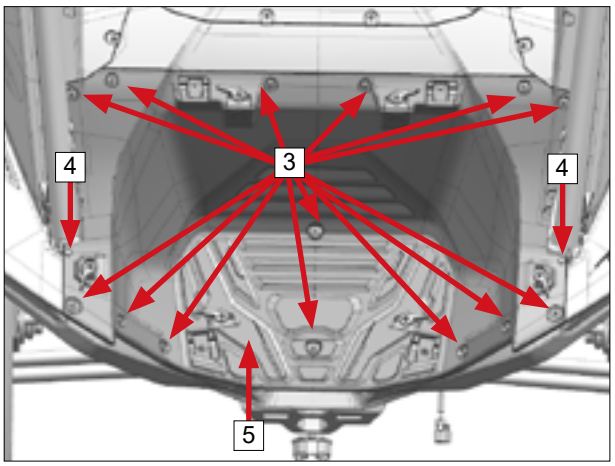

6.37.1 Cargo Box Heat Shield

Removal
Remove the bolts [1].
Remove cargo box heat shield [2].

Installation
Reverse the removal procedures for installation.

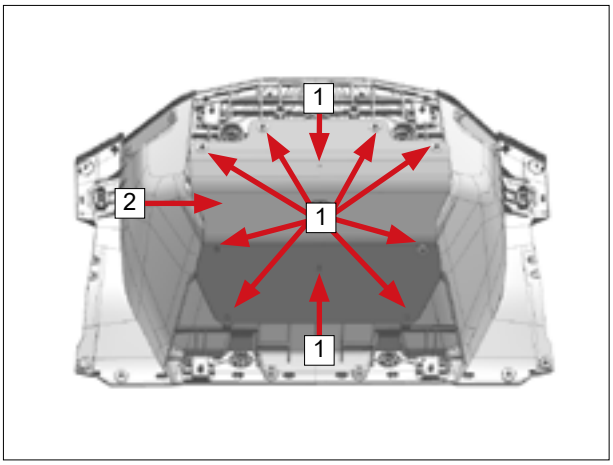

6.38 Cargo Box LH/RH Side Cover Inner Plate

Removal
Remove the bolts [1].

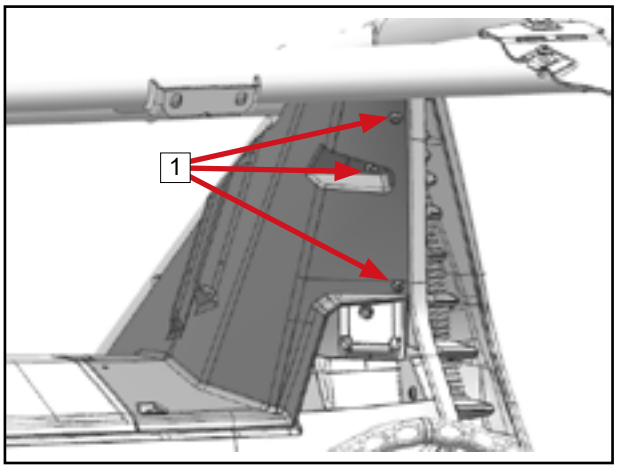

Remove the bolts [2].
Remove cargo box LH side cover inner plate [3].

The cargo box RH side cover is removed and installed in the same way as the LH.

Installation
Reverse the removal procedures for installation.

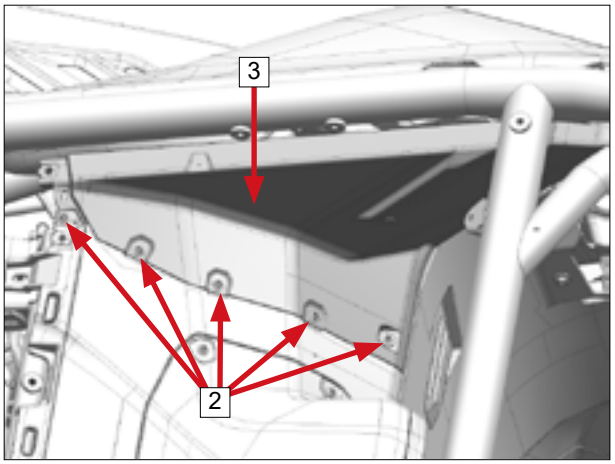

© CFMOTO Powersports, Inc. This manual is subject to all applicable copyright laws. Reproduction or duplication in any form, whole or in part, is strictly prohibited.

6.39 LH/RH Upper Filter Panel

Removal

Remove the bolts 1.

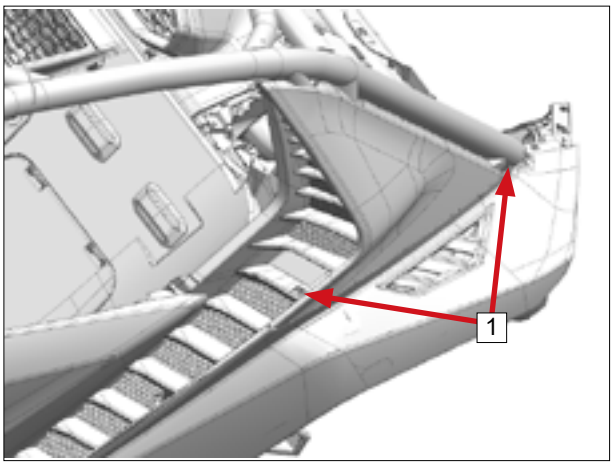

Remove the bolts 2.
Remove the LH upper filter panel assembly 3.

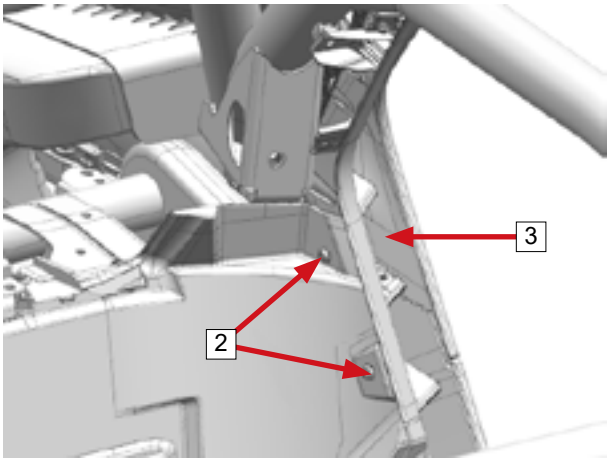

The RH upper filter panel assembly is removed and installed in the same way as the LH.

Installation

Reverse the removal procedures for installation.

6.40 Grill Assembly

Removal

Remove grill rear guard bolts 1.
Remove grill bolts 2.
Remove grill assembly 3.

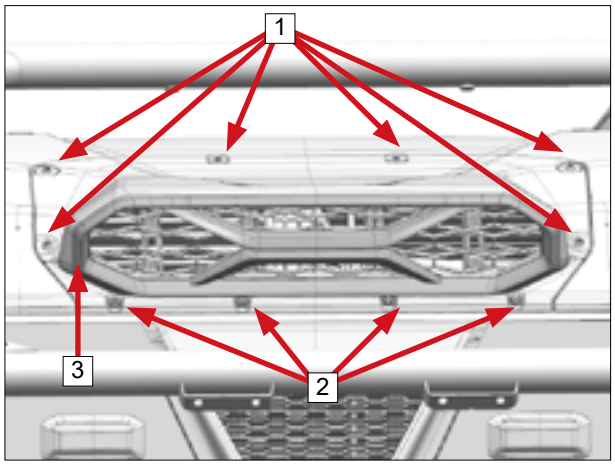

Installation

Reverse the removal procedures for installation.

6.40.1 Grill Deco Guard

Removal

Remove the bolts 1.

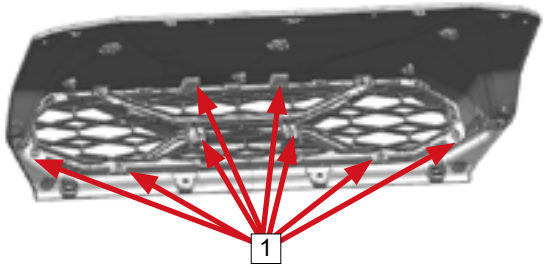

© CFMOTO Powersports, Inc. This manual is subject to all applicable copyright laws. Reproduction or duplication in any form, whole or in part, is strictly prohibited.

Remove the grill deco guard 2 forward.

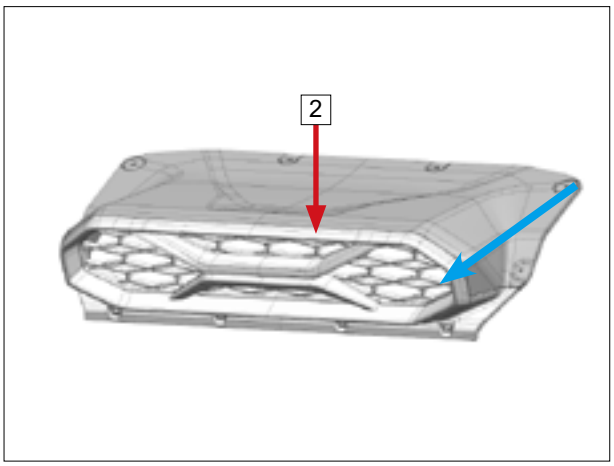

Installation
Reverse the removal procedures for installation.

6.40.2 Grill and Grill Rear Guard

Removal
Remove the bolts 1 .
Remove grill 2 and grill rear guard 3 .

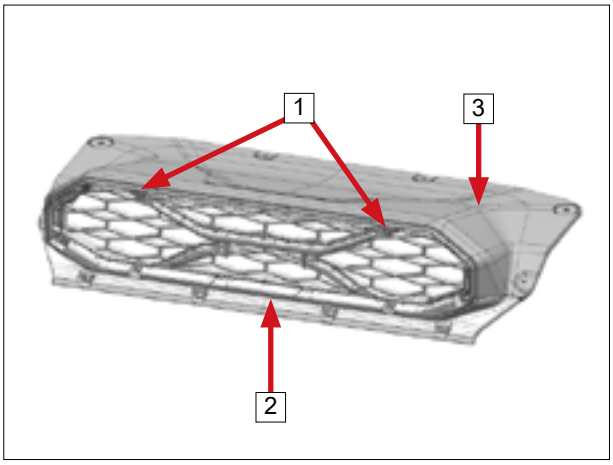

Installation
Reverse the removal procedures for installation.

6.41 Cargo Box Front Baffle

Removal
Remove the bolts 1.
Remove the bolts 2.

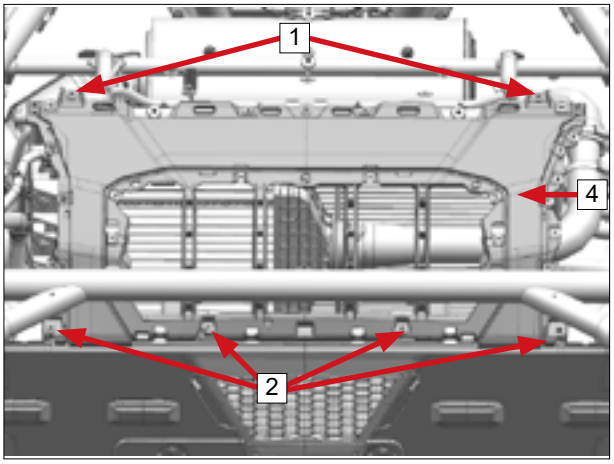

Remove LH radiator LH baffle bolts 3.
Remove cargo box upper baffle 4.

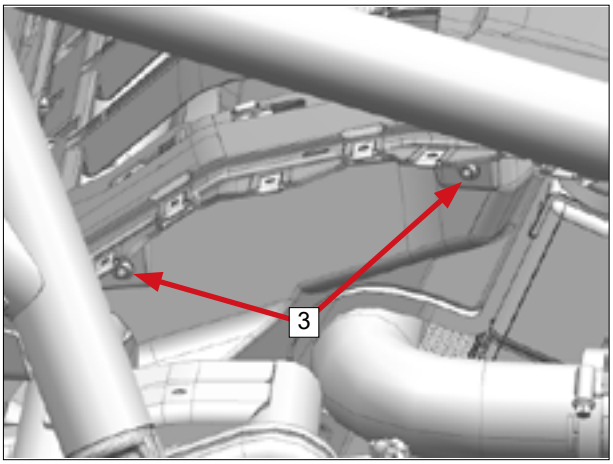

Installation
Reverse the removal procedures for installation.

© CFMOTO Powersports, Inc. This manual is subject to all applicable copyright laws. Reproduction or duplication in any form, whole or in part, is strictly prohbited.

6.42 Rear Lower Guard

Removal

Remove the bolts 1.
Remove the plastic snap assemblies 2.
Remove the rear lower guard 3.

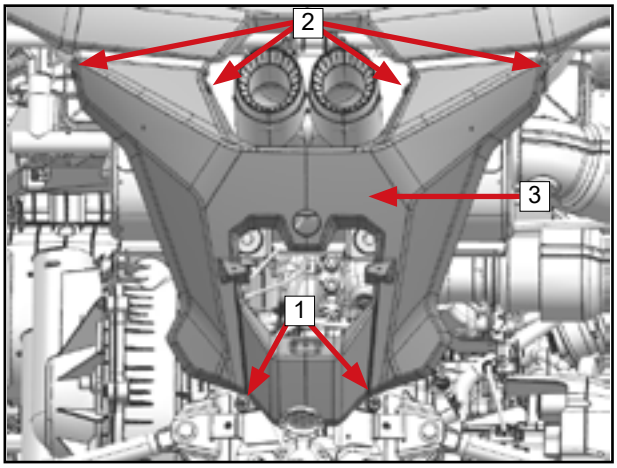

Installation

Reverse the removal procedures for installation.

6.43 Rear LH/RH Side Panel Assembly

Removal

Remove the bolts 1.
Remove plastic snap assemblies 2.

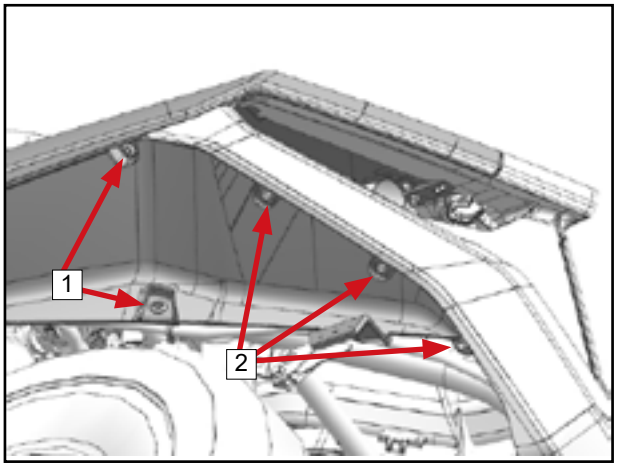

Remove the bolts 3.
Remove plastic snap assembly 4.

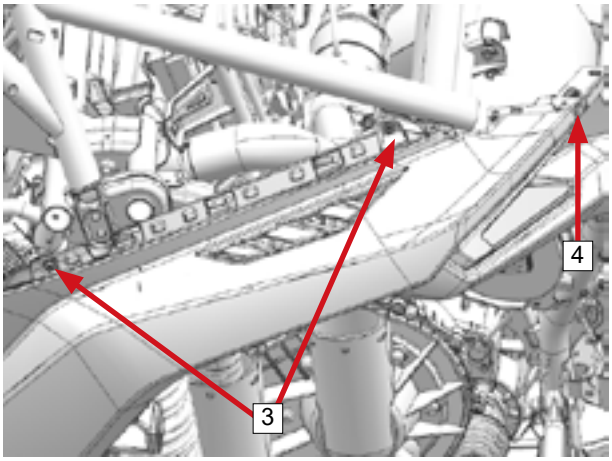

Remove the bolts 5.

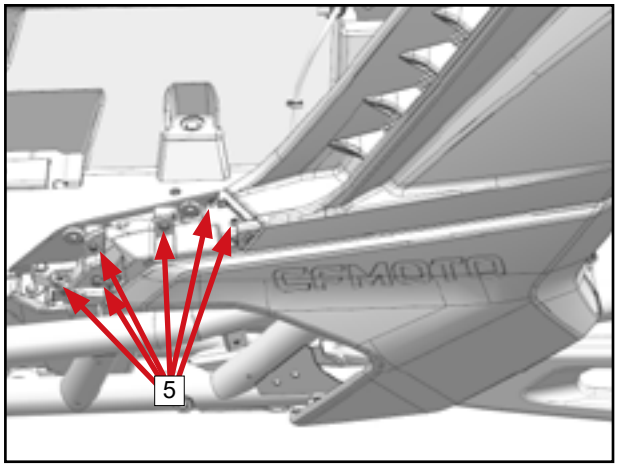

© CFMOTO Powersports, Inc. This manual is subject to all applicable copyright laws. Reproduction or duplication in any form, whole or in part, is strictly prohbited.

Remove the bolts 6.
Remove the rear LH side panel assembly 7.
Rear RH side panel assembly is removed and installed in the same way as the LH.

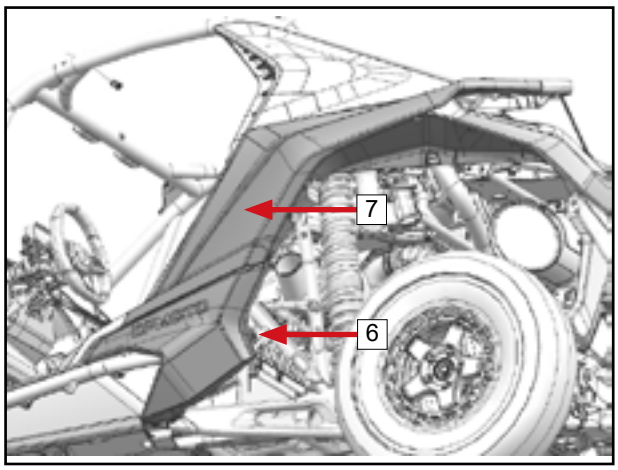

Installation
Reverse the removal procedures for installation.

6.43.1 Reflector

Removal
Remove the bolts 1.
Remove the LH reflector mounting bracket 2.

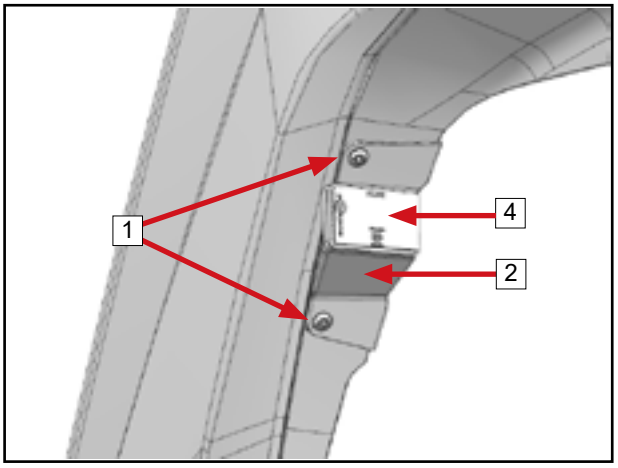

Remove the rear bolt 3.
Remove the reflector 4.

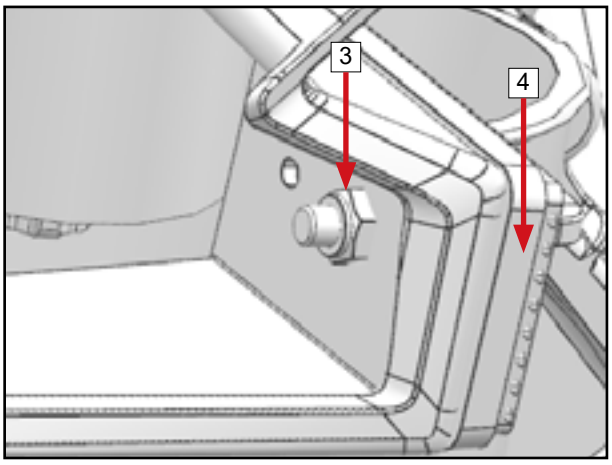

Installation
Reverse the removal procedures for installation.

6.43.2 Rear LH Side Panel

Removal
Remove the bolts 1.
Remove the rear LH side panel 2.
The rear RH side panel is removed and installed in the same way as the LH.

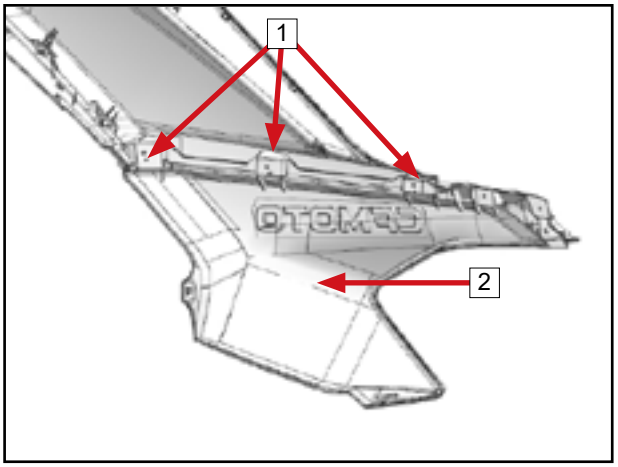

Installation
Reverse the removal procedures for installation.

© CFMOTO Powersports, Inc. This manual is subject to all applicable copyright laws. Reproduction or duplication in any form, whole or in part, is strictly prohibited.

6.43.3 Cargo Box LH Panel and LH Rear Fender

Removal

Remove the bolts 1.
Remove the screws 2.
Remove the cargo box LH panel 3 and LH rear fender 4.
The cargo box RH side panel is removed and installed in the same way as the LH.
The RH rear fender is removed and installed in the same way as the LH.

Installation

Reverse the removal procedures for installation.

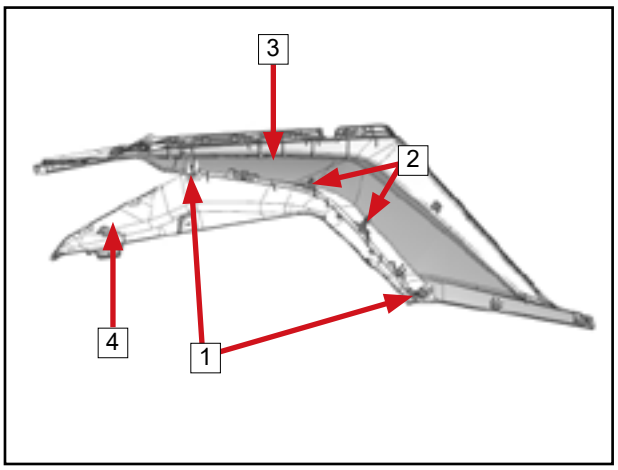

6.44 Tail light Panel Assembly

Removal

Remove LH and RH tail light cable plug connectors 1.

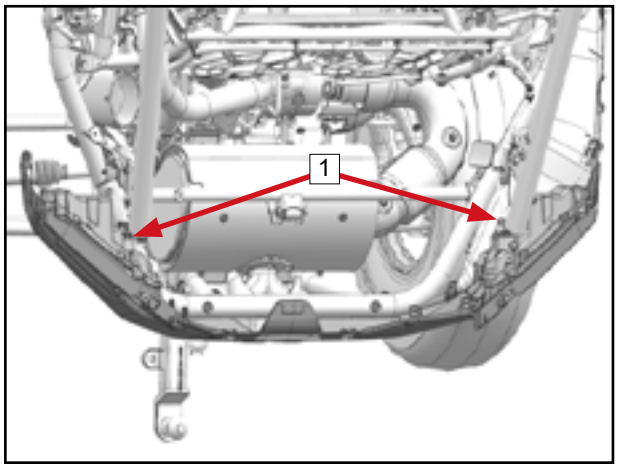

Remove the bolts 2.
Remove tail light panel assembly 3.

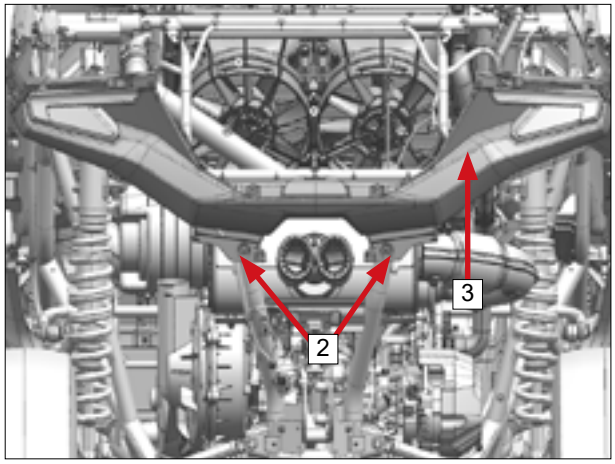

Installation

Reverse the removal procedures for installation.

6.44.1 LH/RH Tail Light

Removal

Remove the bolts 1.
Remove RH tail light 2.

The LH tail light is removed and installed in the same way as the RH.

Installation

Reverse the removal procedures for installation.

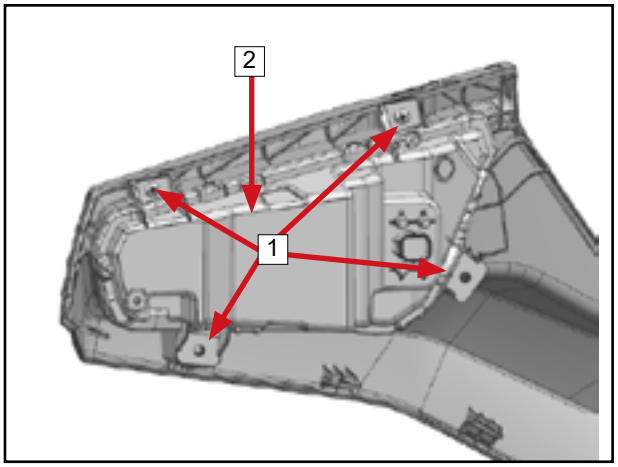

© CFMOTO Powersports, Inc. This manual is subject to all applicable copyright laws. Reproduction or duplication in any form, whole or in part, is strictly prohibited.

6.45 LH/RH Side Inner Panel

Removal

Remove the bolt [1].
Remove the plastic clasps [2].
Remove the LH inner panel [3].

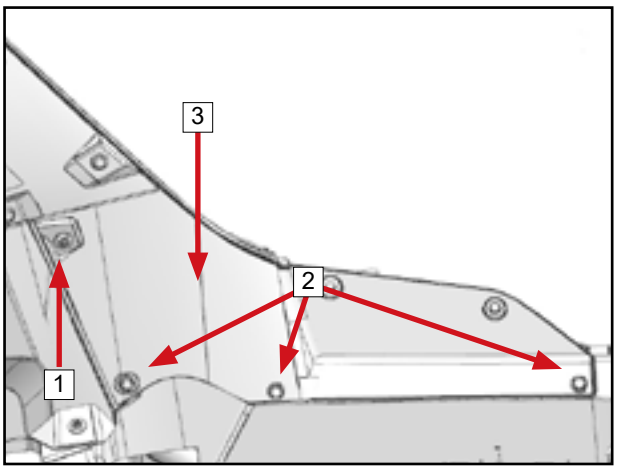

The RH side inner panel is removed and installed in the same way as LH.

Installation

Reverse the removal procedures for installation.

6.46 LH/RH Front Filter Panel

Removal

Remove the bolts [1].

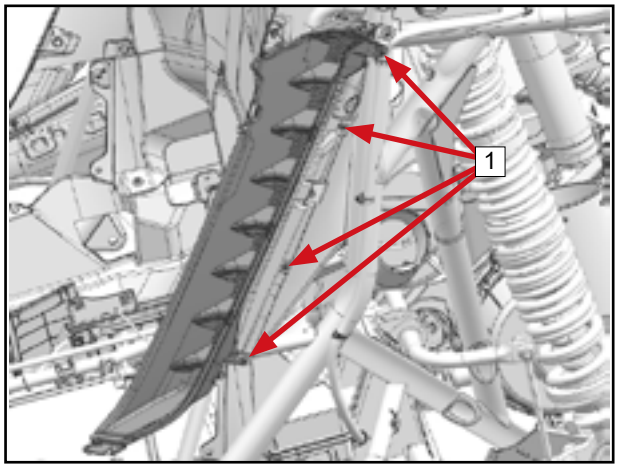

Remove the bolts [2].
Remove the plastic clasp assemblies [3].
Remove the LH front filter panel [4].

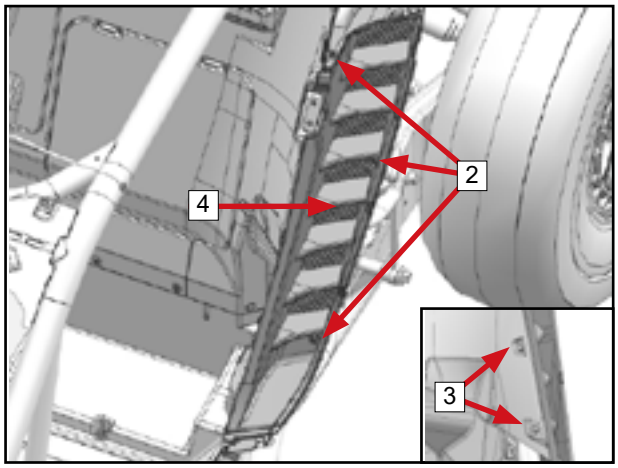

The RH front filter panel is removed and installed in the same way as the LH.

Installation

Reverse the removal procedures for installation.

6.47 Panel Front Service Cover

Removal

Turn the connect clamps [1] to unlocked state.
Remove the panel front service cover [2].

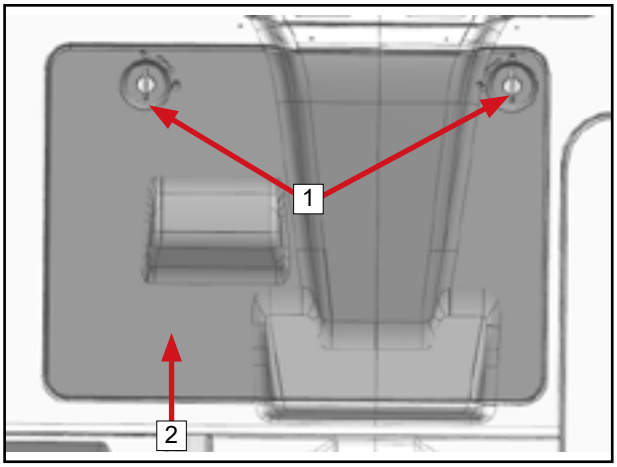

Installation

Reverse the removal procedures for installation.

© CFMOTO Powersports, Inc. This manual is subject to all applicable copyright laws. Reproduction or duplication in any form, whole or in part, is strictly prohibited.

6.48 Air filter Service Cover

Removal

Lift the tabs [1] and open the air filter service cover.

Pull up and remove the air filter service cover [2].

Installation

Reverse the removal procedures for installation.

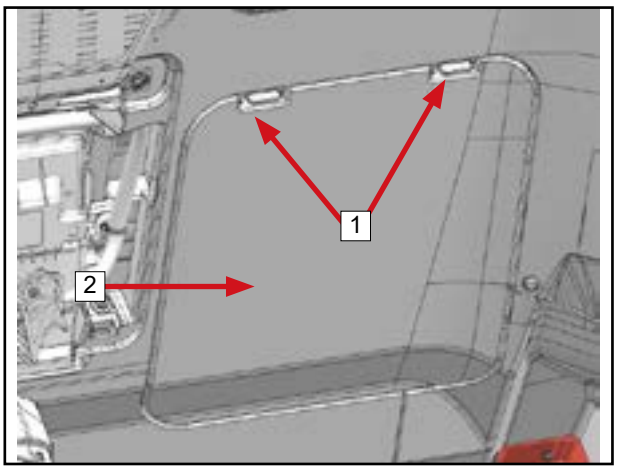

6.49 Panel Upper Service Cover

Removal

Lift the tabs [1] and open the panel upper service cover.

Pull up and remove the panel upper service cover [2].

Installation

Reverse the removal procedures for installation.

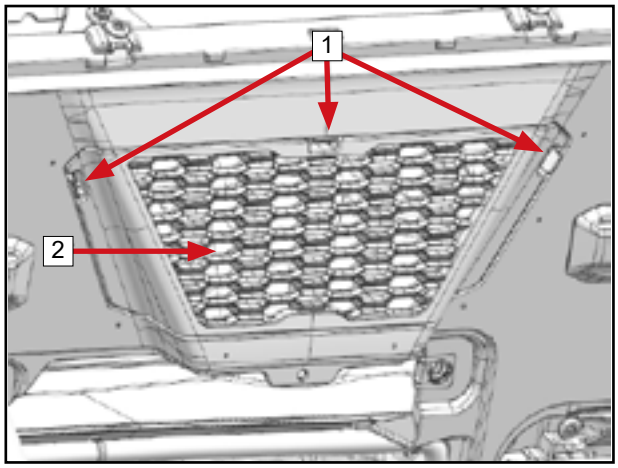

6.50 Seat Rear Panel

Removal

Remove the bolts [1].

Remove the LH and RH bolts [2].

Remove the upper bolt [3].

Remove the plastic snap assemblies [4].

Remove the seat rear panel [5].

Installation

Reverse the removal procedures for installation.

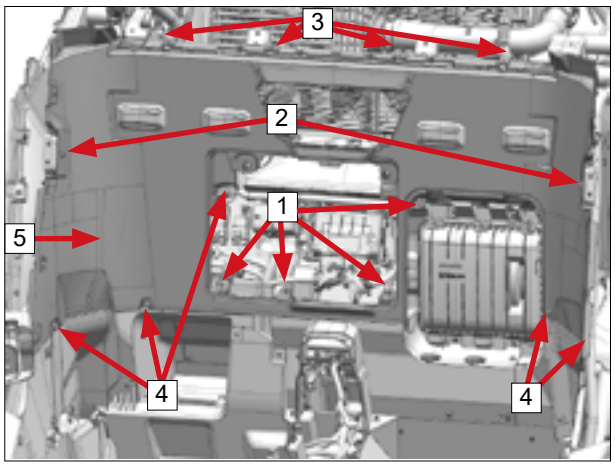

6.51 Cab Assembly (Z10)

Removal

Remove the front LH bolt [1] and [2].

Remove the front RH symmetrical bolts.

Remove the bolt [3] .

Remove nut press plate [4] .

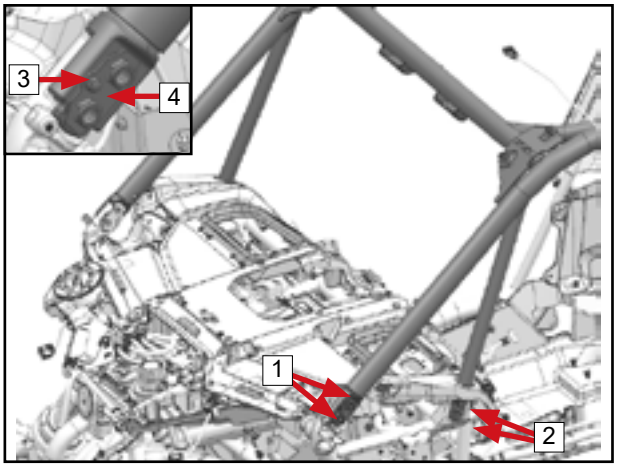

© CFMOTO Powersports, Inc. This manual is subject to all applicable copyright laws. Reproduction or duplication in any form, whole or in part, is strictly prohibited.

Remove rear LH bolt [5] and [6].
Remove rear RH symmetrical bolts.
Remove the cab assembly [7].

Installation
Reverse the removal procedures for installation. Refer to Chapter 02 for torque specifications.

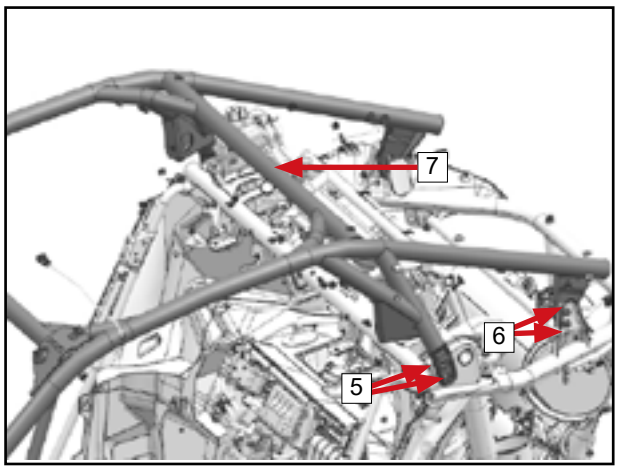

6.52 Cab Assembly (Z10-4)

6.52.1 Cab Front Assembly

Removal
Remove the front LH bolt [1] and [2].
Remove the front RH symmetrical bolts.
Remove the bolt [3].
Remove nut press plate [4].

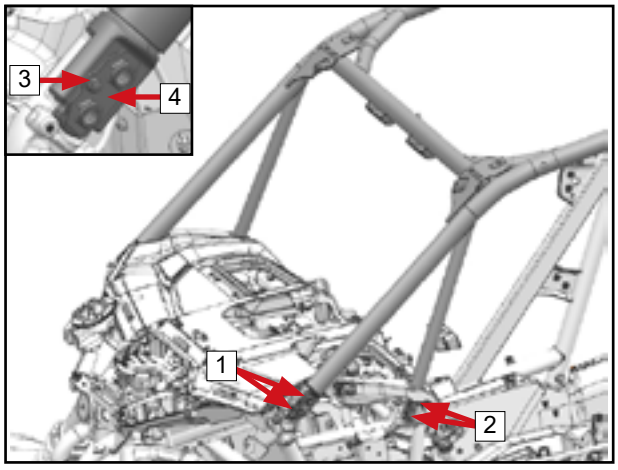

Remove rear LH bolt [5] and [6].
Remove rear RH symmetrical bolts.
Remove the cab front assembly [7].

Installation
Reverse the removal procedures for installation. Refer to Chapter 02 for torque specifications.

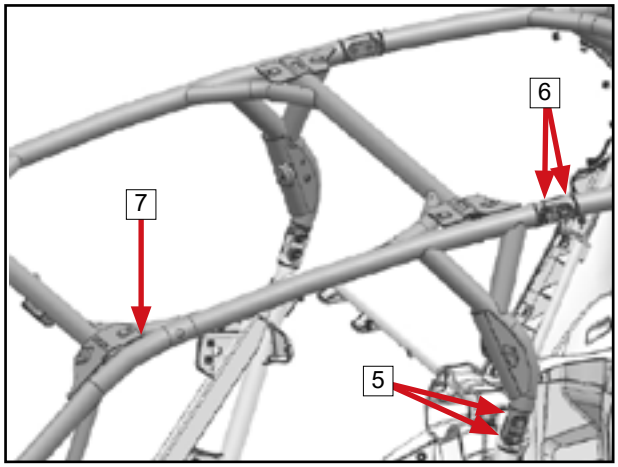

6.52.2 Cab Rear Assembly

Removal
Remove LH side bolt [1] and [2].
Remove the RH symmetrical bolts.
Remove the cab rear assembly [3].

Installation
Reverse the removal procedures for installation. Refer to Chapter 02 for torque specifications.

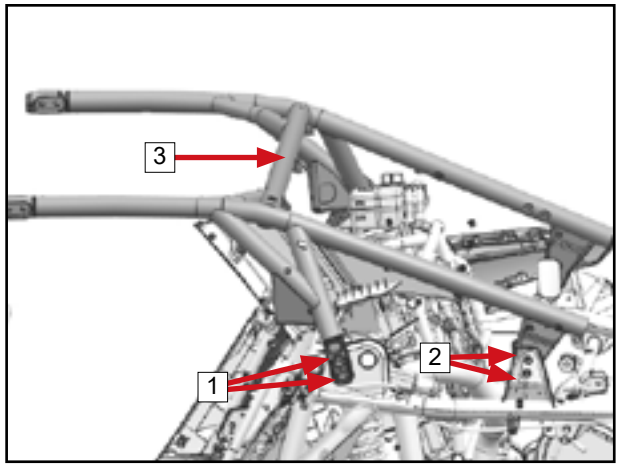

© CFMOTO Powersports, Inc. This manual is subject to all applicable copyright laws. Reproduction or duplication in any form, whole or in part, is strictly prohibited.

6.53 Engine Heat Shield Assembly

6.53.1 ECU

Removal

Unplug the cable connector.
Remove the bolts [1].
Remove the ECU [2].

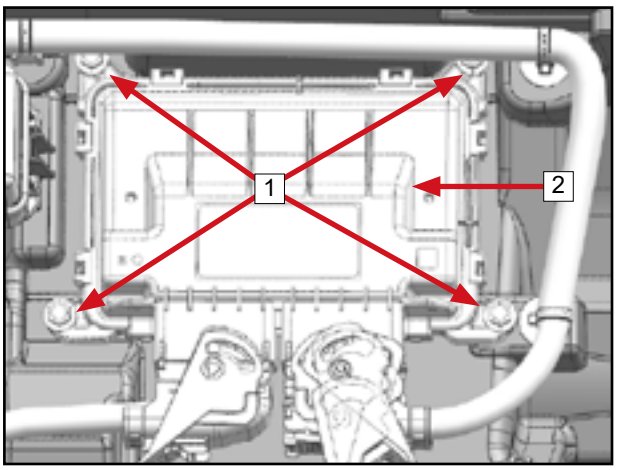

Installation

Reverse the removal procedures for installation.

6.53.2 Fuse/Relay Box

Removal

Press the clamped locations [1].
Remove the clamped fuse / relay box [2].

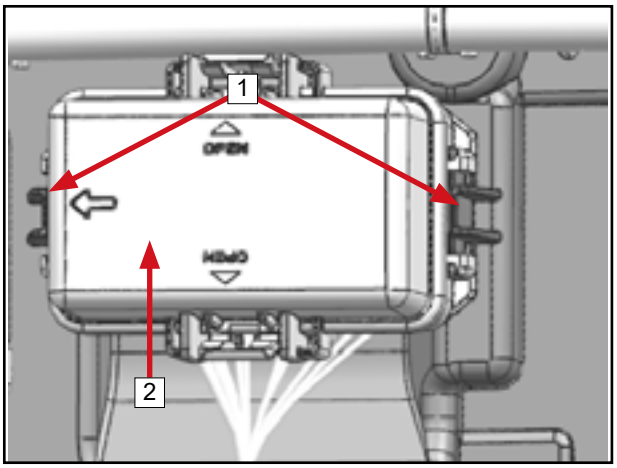

Installation

Reverse the removal procedures for installation.

6.53.3 Fan Relays

Removal

Unplug the cable connector.
Remove the bolts [1].
Remove the fan relay [2].

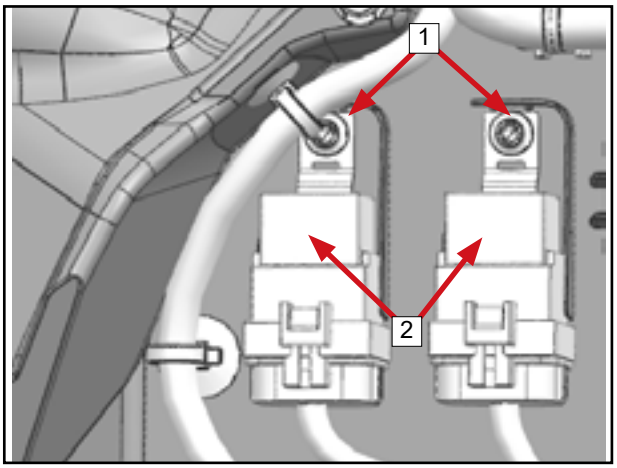

Installation

Reverse the removal procedures for installation.

6.54 Engine Heat Shield

Removal

Remove the clamped inlet protective cover [1].
Remove CVT pipe [2].

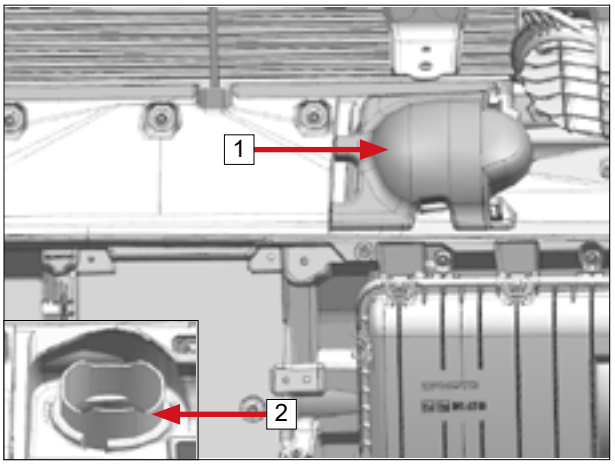

© CFMOTO Powersports, Inc. This manual is subject to all applicable copyright laws. Reproduction or duplication in any form, whole or in part, is strictly prohibited.

Remove plastic clip assemblies 3.
Remove air filter bolts 4.

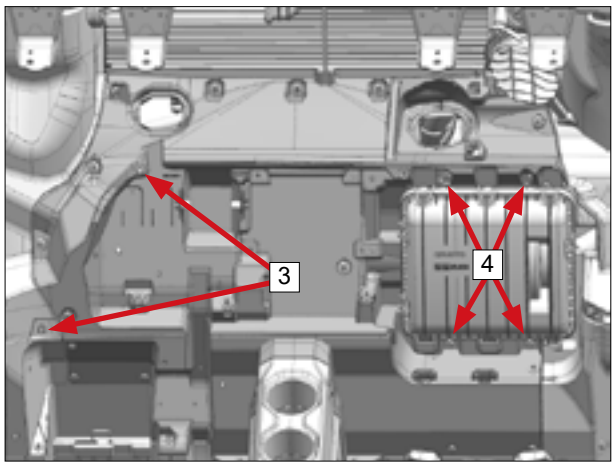

Remove the bolts 5.
Remove the engine heat shield 6.

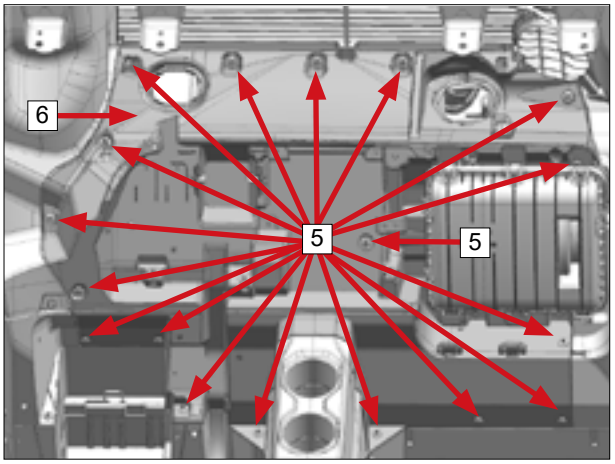

Installation
Reverse the removal procedures for installation.

6.55.1 Air Filter Housing

Removal
Remove the air filter clamps 1.
Remove the air filter housing 2.

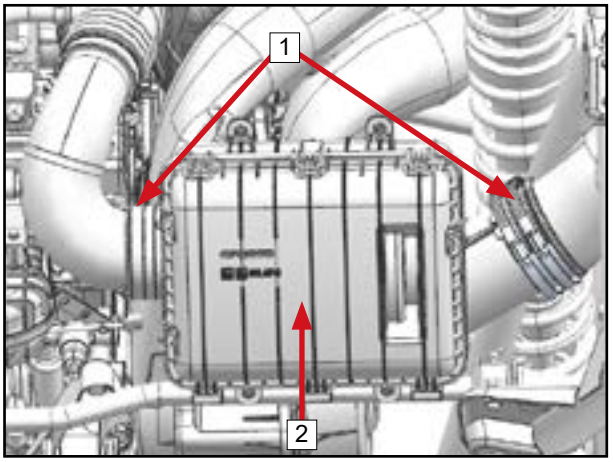

Installation
Reverse the removal procedures for installation.

6.56 LH / RH Inlet Deflector Plate

Removal
Remove the inlet protective cover 2 1.
Remove the CVT intake pipe at the back.

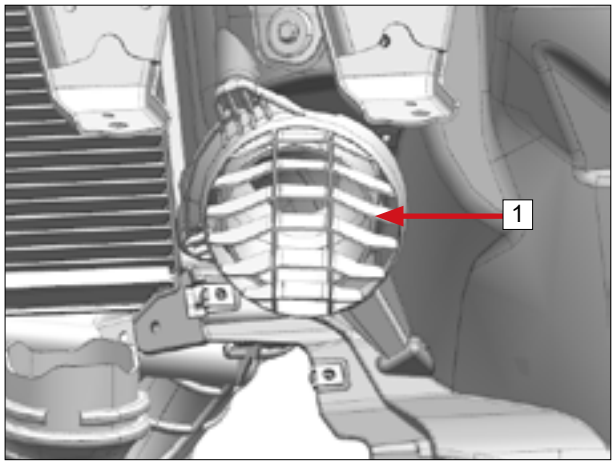

© CFMOTO Powersports, Inc. This manual is subject to all applicable copyright laws. Reproduction or duplication in any form, whole or in part, is strictly prohibited.

Remove the plastic snap assembly 2.

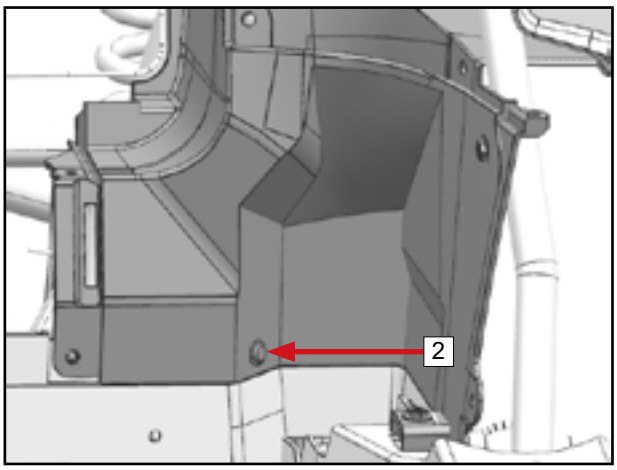

Remove the bolts 3.
Remove LH air inlet deflector 4.

The RH air inlet deflector is removed and installed in the same way as the LH.

Installation
Reverse the removal procedures for installation

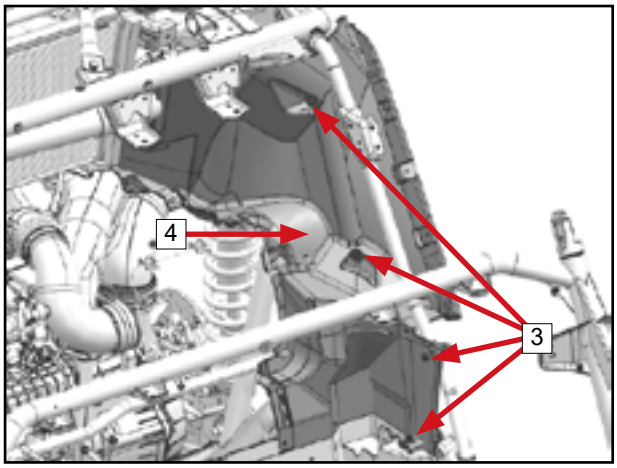

6.57 Battery Box

Removal
Remove the bolts 1.
Remove the battery box 2.

Installation
Reverse the removal procedures for installation.

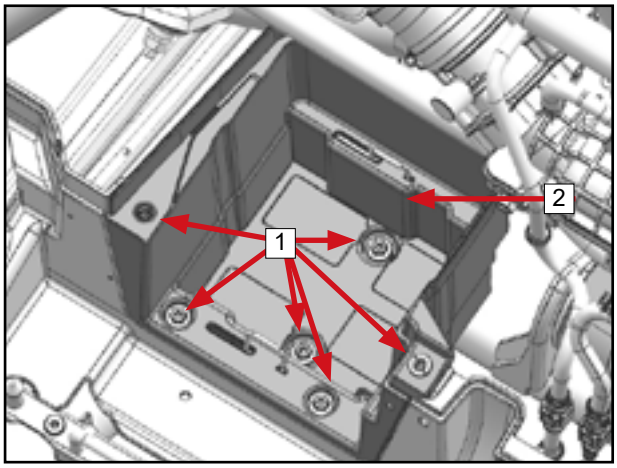

6.58 Seat Lower Guard

Removal
Remove the LH bolts 1.
Remove the LH plastic snap assemblies 2.



© CFMOTO Powersports, Inc. This manual is subject to all applicable copyright laws. Reproduction or duplication in any form, whole or in part, is strictly prohibited.

Remove the RH bolts [3].
Remove the RH plastic snap assemblies [4].
Remove the lower seat guard [5].

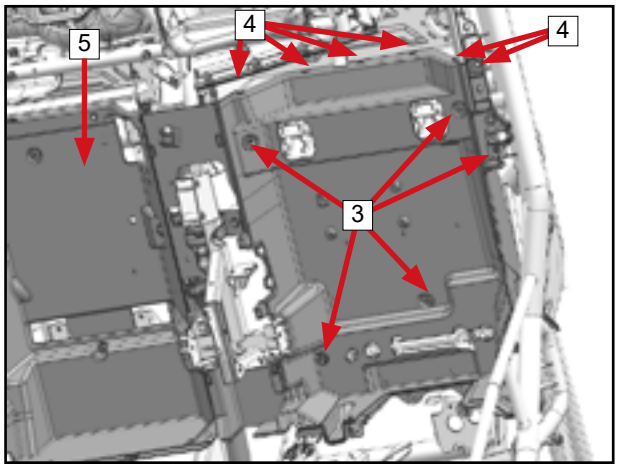

Installation
Reverse the removal procedures for installation.

6.59 Seat Lower Guard (Z10-4)

Removal
Remove the LH bolts [1].
Remove the LH plastic snap assembly [2].

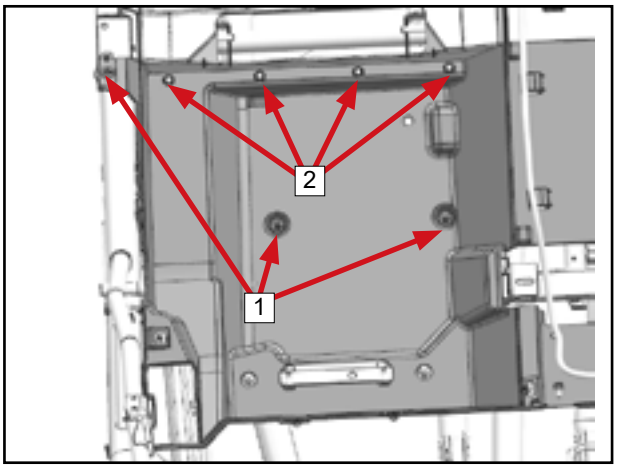

Remove the RH side bolts [3].
Remove the RH plastic snap assembly [4].
Remove the seat lower guard [5].

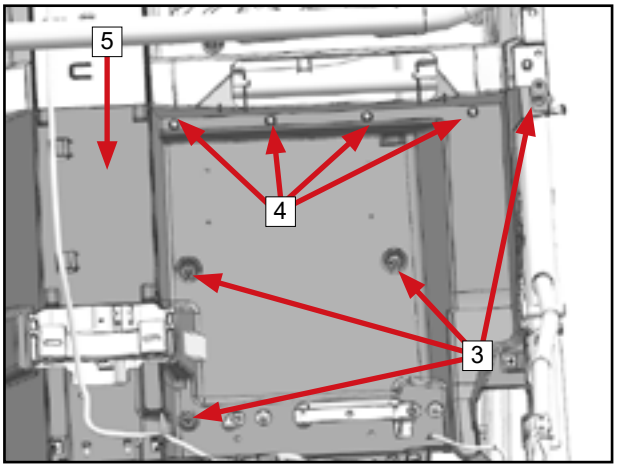

Installation
Reverse the removal procedures for installation.

6.60 Floor Board

Removal
Rotate the floor board plugs to unlock.
Remove the floor board plugs [1].
Remove the bolts [2].
Remove the floor boards [3].

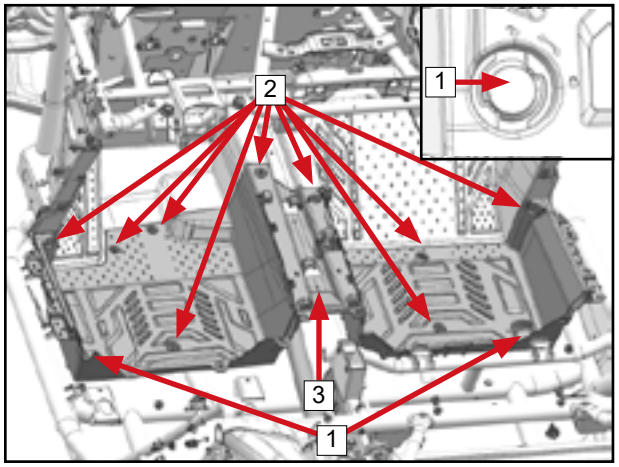

Installation
Reverse the removal procedures for installation.

© CFMOTO Powersports, Inc. This manual is subject to all applicable copyright laws. Reproduction or duplication in any form, whole or in part, is strictly prohibited.

6.61 Rear Floor Board (Z10-4)

Removal

Remove the LH bolts [1].

Remove the LH plastic snap assemblies [2].

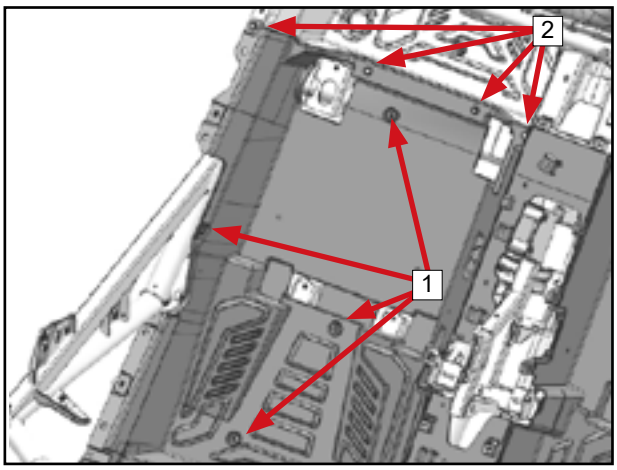

Remove the RH side bolts [3].

Remove the RH plastic snap assemblies [4].

Remove the rear floor board [5].

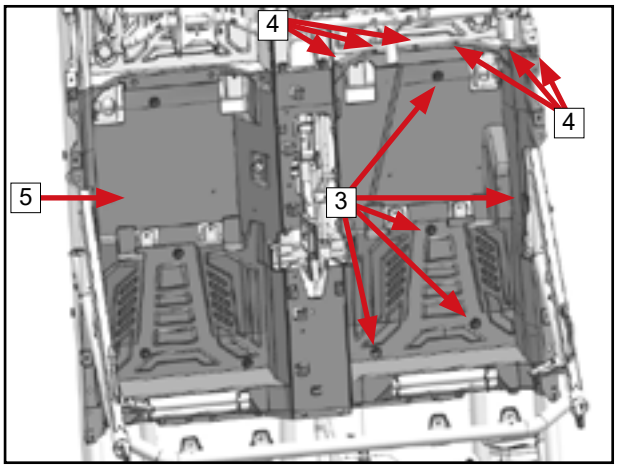

Installation

Reverse the removal procedures for installation.

6.62 Dashboard Upper Body Assembly

Removal

Remove dimmer switch rear cable plug.

Remove the bolts [2].

Remove the dashboard upper body assembly [3].

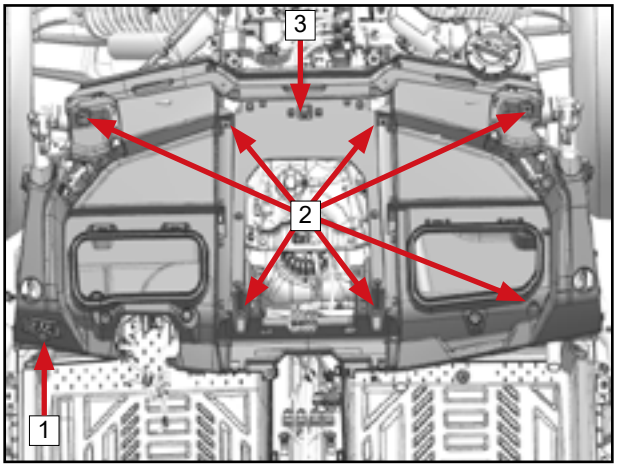

Installation

Reverse the removal procedures for installation.

6.62.1 Driver Storage Box

Removal

Remove bolts [1].

Remove driver storage box [2].

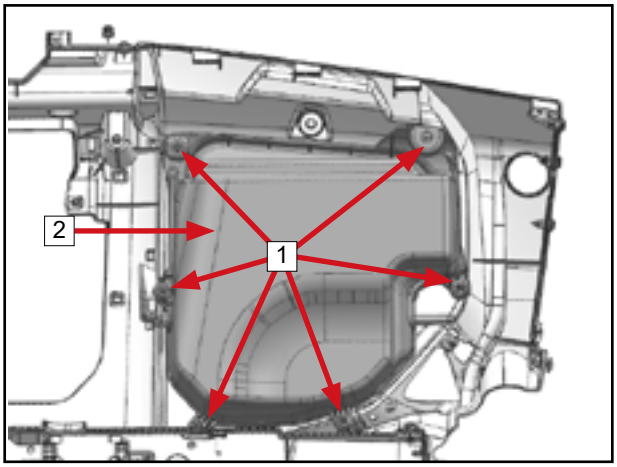

Installation

Reverse the removal procedures for installation.

© CFMOTO Powersports, Inc. This manual is subject to all applicable copyright laws. Reproduction or duplication in any form, whole or in part, is strictly prohibited.

6.62.2 Passenger Storage Box

Removal

Remove bolts 1.

Remove passenger storage box 2.

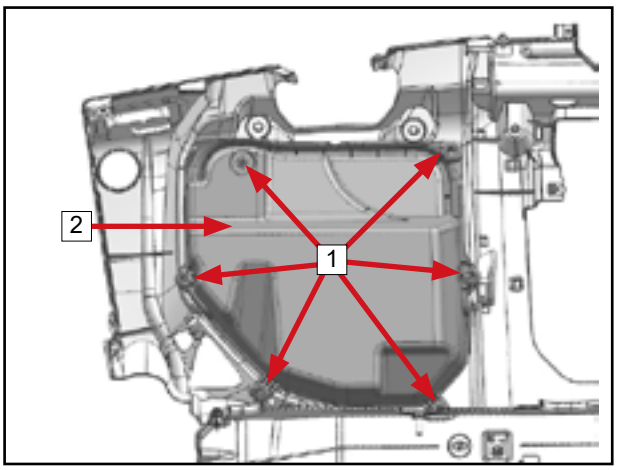

Installation

Reverse the removal procedures for installation.

6.62.3 Dimmer Switch

Removal

Press the switch clamps 1 on the back.

Remove the dimmer switch 2.

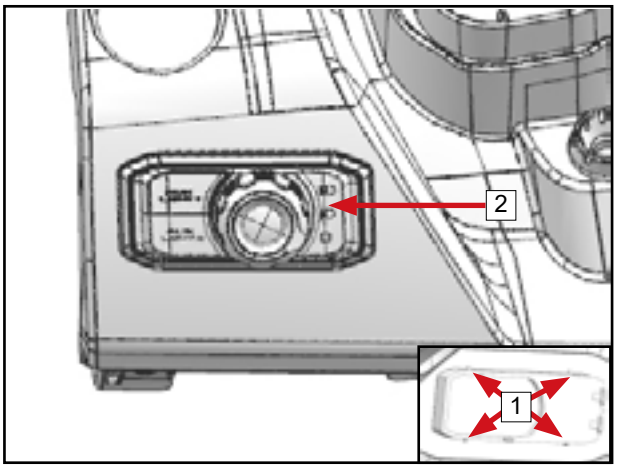

Installation

Reverse the removal procedures for installation.

6.63 Front Inner Plate Assembly

6.63.1 PEPS Controller

Removal

Remove PEPS controller plug 1.

Remove snapped PEPS controller 2.

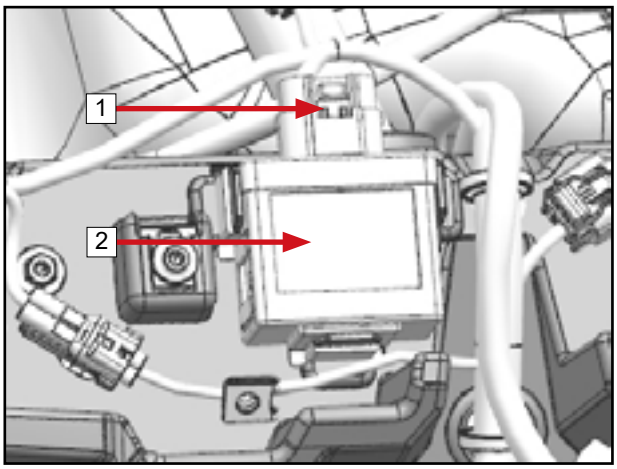

Installation

Reverse the removal procedures for installation.

6.63.2 T-BOX

Removal

Remove the T-BOX plug 1.

Remove the T-BOX rubber sleeves 2.

Remove T-BOX 3.

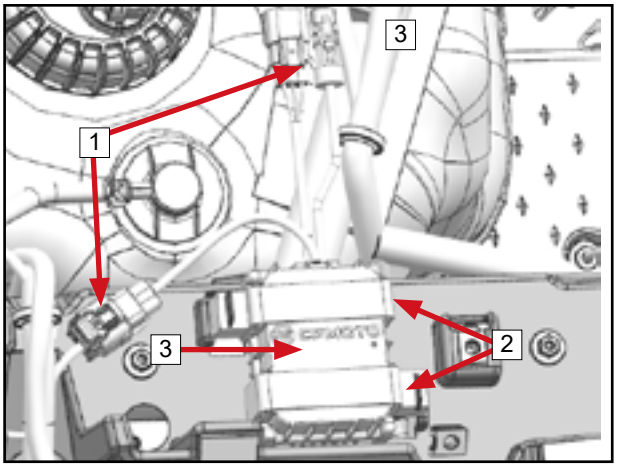

Installation

Reverse the removal procedures for installation.

© CFMOTO Powersports, Inc. This manual is subject to all applicable copyright laws. Reproduction or duplication in any form, whole or in part, is strictly prohibited.

6.63.3 Fuel Tank Cap Assembly

Removal

Loosen the tank cap [1].
Remove the bolts [2].
Remove the fuel tank cover deco ring [3].

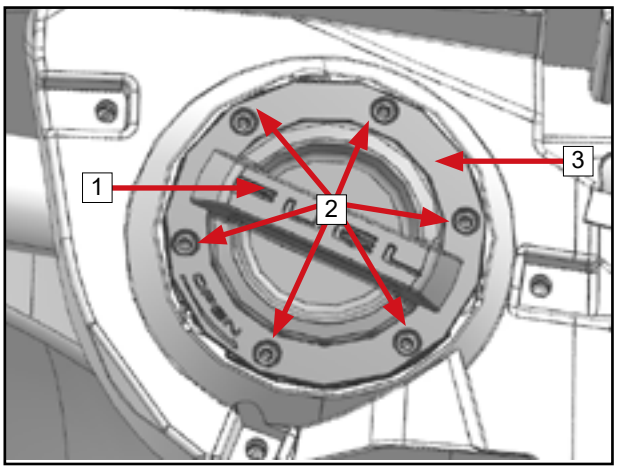

Remove the bolts [4].
Remove the fuel tank cover assembly from the front inner plate.

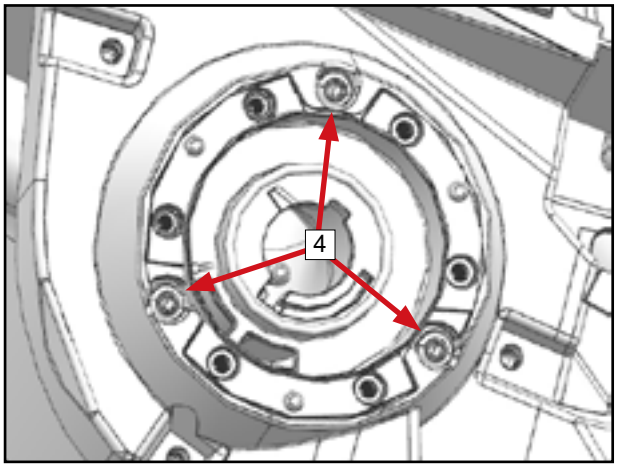

Installation

Reverse the removal procedures for installation.

6.63.4 Buzzer

Removal

Remove the buzzer cable plug [1].
Remove buzzer bolts [2].
Remove buzzer [3].

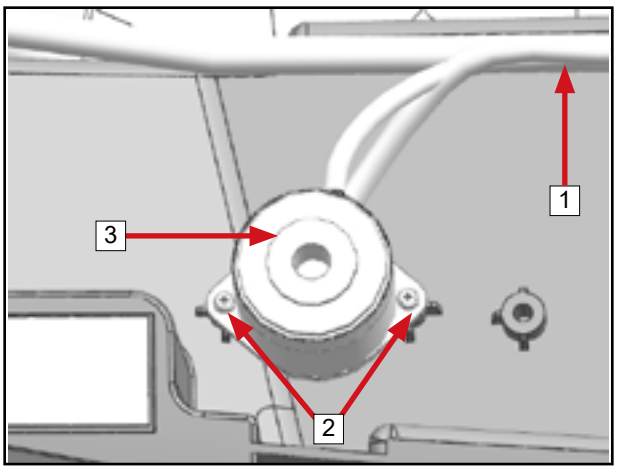

Installation

Reverse the removal procedures for installation.

6.63.5 Winch Control Relay

Removal

Remove the main cable, winch motor cable, power positive and negative cable from the winch relay terminals.

Remove winch control relay bolts [1].
Remove winch control relay [2].

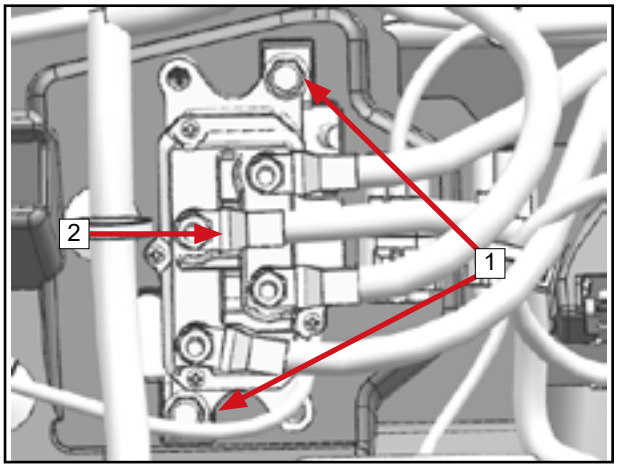

Installation

Reverse the removal procedures for installation.

© CFMOTO Powersports, Inc. This manual is subject to all applicable copyright laws. Reproduction or duplication in any form, whole or in part, is strictly prohbited.

6.63.6 Accessory Power Terminal

Removal

Remove the accessory power terminal cable plug [1].
Remove the terminal bolts [2].
Remove the accessory power terminal [3].

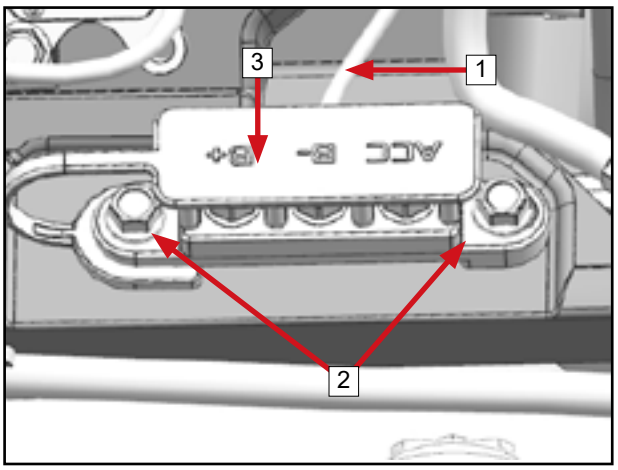

Installation

Reverse the removal procedures for installation.

6.63.7 Front Inner Plate

Removal

Remove the bolts [1].

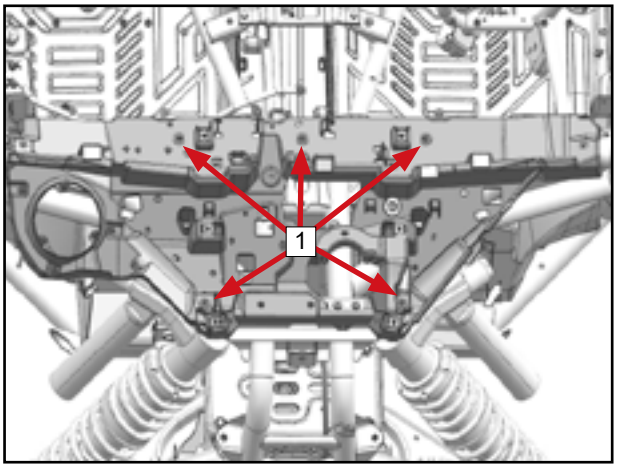

Remove the plastic snap assemblies [2].
Remove front inner plate [3].

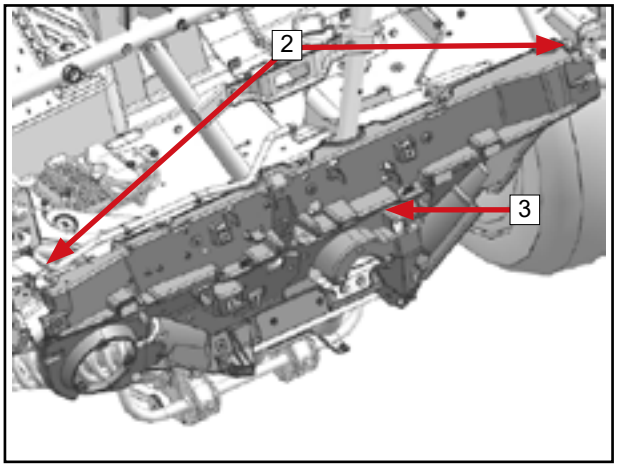

6.64 Electric Horn (Select Markets)

Removal

Unplug cable plugs of electric horn.
Remove the bolt [1] .
Remove electric horn [2].

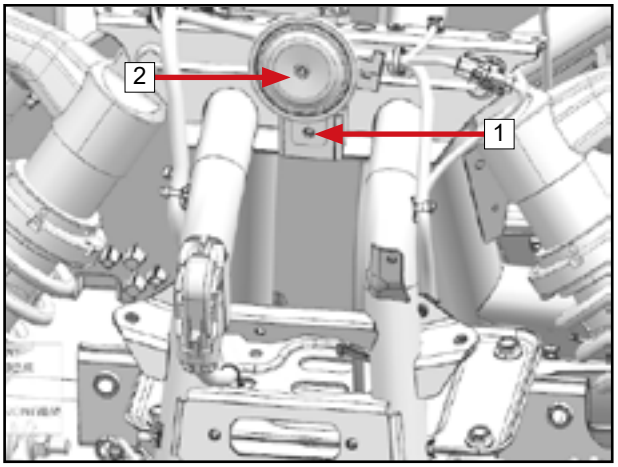

Installation

Reverse the removal procedures for installation.

© CFMOTO Powersports, Inc. This manual is subject to all applicable copyright laws. Reproduction or duplication in any form, whole or in part, is strictly prohbited.

6.65 Winch Assembly and Winch Bracket

Removal

Unplug all cable connectors from winch.
Remove the 4 bolts [1] securing the winch.
Remove the winch assembly and the winch bracket assembly.

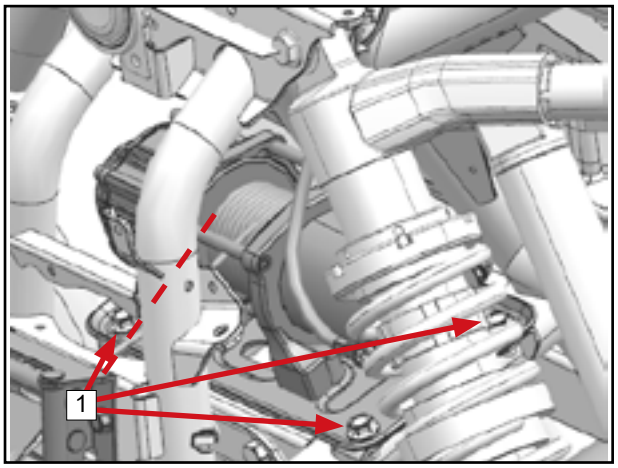

Remove the bolts [2] securing the winch.
Remove winch [3].

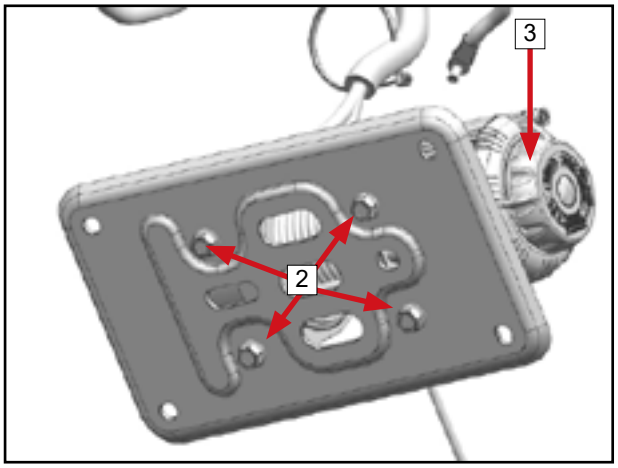

Installation

Reverse the removal procedures for installation.

6.66 Fuel Tank Assembly

Removal

Remove the inner bolts [2] of the tank mounting straps [1].

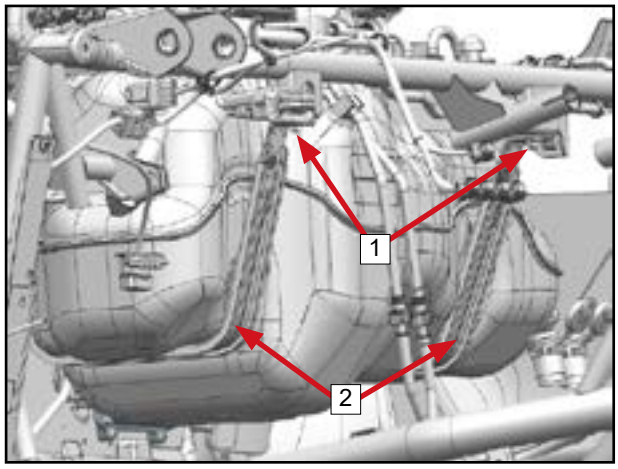

Remove the outer bolts [1] of the tank mounting straps [3].
Remove the fuel tank [4].

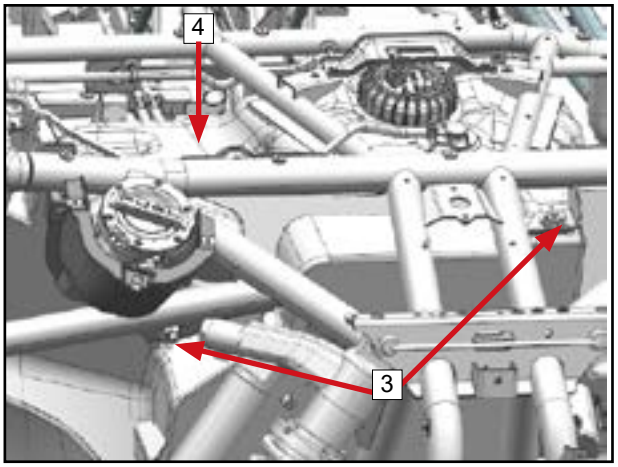

Installation

Reverse the removal procedures for installation.

© CFMOTO Powersports, Inc. This manual is subject to all applicable copyright laws. Reproduction or duplication in any form, whole or in part, is strictly prohibited.

6.67 Front Small Fender

Removal

Remove the bolts [1].
Remove the small front fender [2].

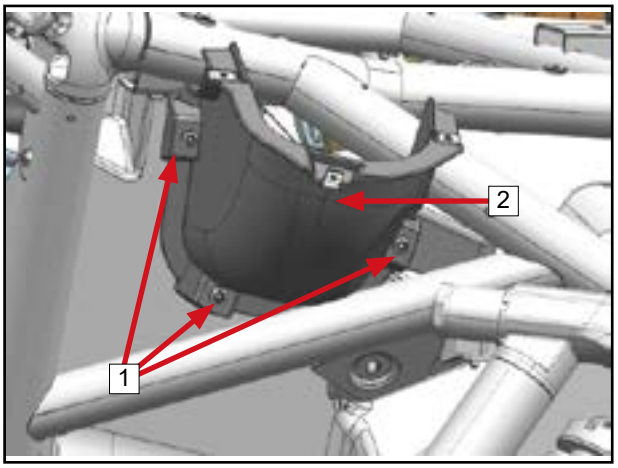

Installation

Reverse the removal procedures for installation.

6.68 E-throttle Pedal

Removal

Unplug cable connectors.
Remove the bolts [1].
Remove the throttle pedal [2].

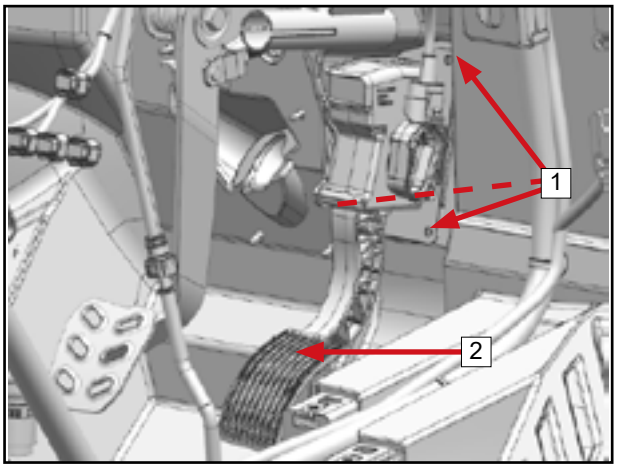

Installation

Reverse the removal procedures for installation.

6.69 Brake Pedal

Removal

Remove cotter pin [1].
Remove the pin shafts [2] connecting the brake master cylinder to the brake pedal.

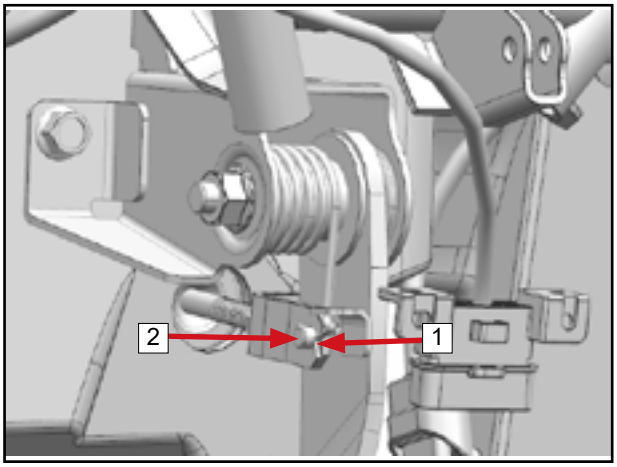

Remove the bolts [3].
Remove the brake pedal [4].

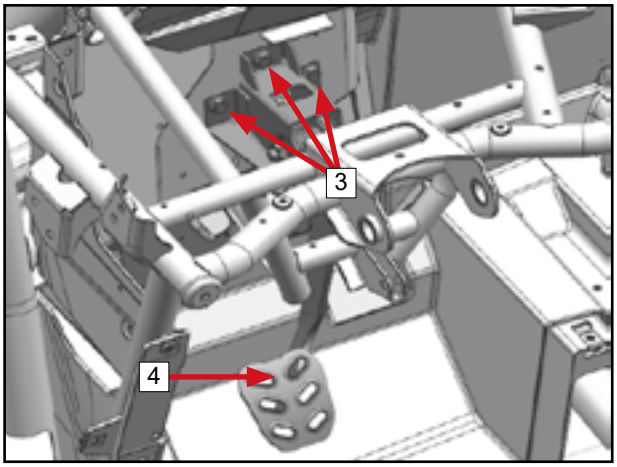

Installation

Reverse the removal procedures for installation.

© CFMOTO Powersports, Inc. This manual is subject to all applicable copyright laws. Reproduction or duplication in any form, whole or in part, is strictly prohibited.

6.70 Front Fender Assembly

Removal

Remove the body controller [1] cable connector.

Remove suspension control unit [2] and the cable plug for electronic limited slip differential lock [3] (If equipped).

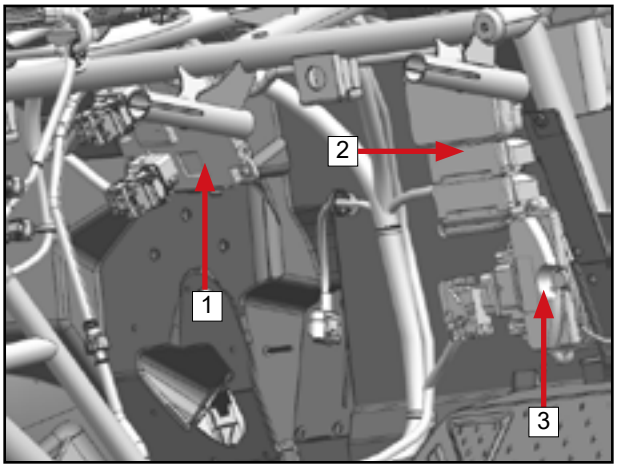

Remove the bolts [3].

Remove front fender assembly [4].

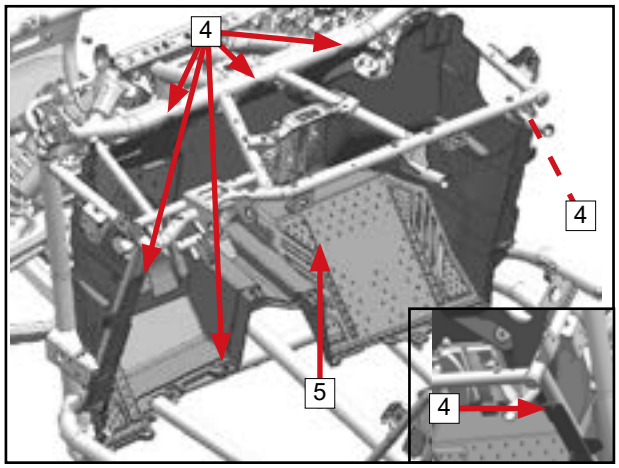

Installation

Reverse the removal procedures for installation.

6.70.1 BCM

Removal

Remove the bolts [1].

Remove the BCM [2].

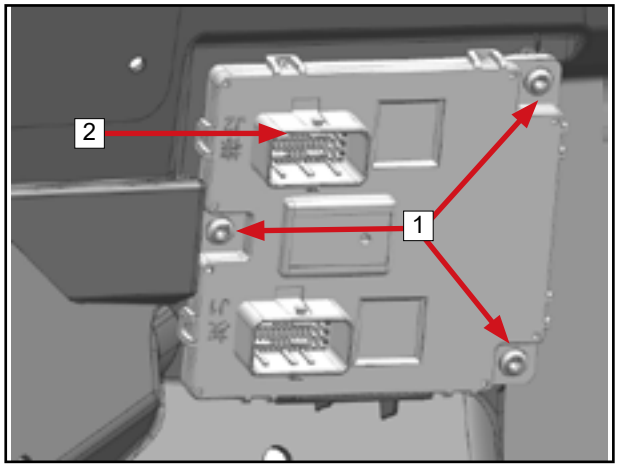

Installation

Reverse the removal procedures for installation.

6.70.2 Suspension Control Unit

Removal

Remove the bolts [1].

Remove suspension control unit [2].

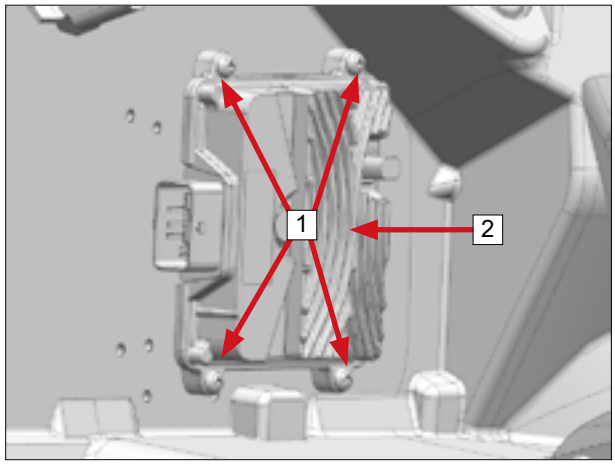

Installation

Reverse the removal procedures for installation.

© CFMOTO Powersports, Inc. This manual is subject to all applicable copyright laws. Reproduction or duplication in any form, whole or in part, is strictly prohibited.

6.70.3 Electronic Limited Slip Differential Lock Controller (If equipped)

Removal

Remove the bolts 1.

Remove the electronic limited slip diffenrential lock 2.

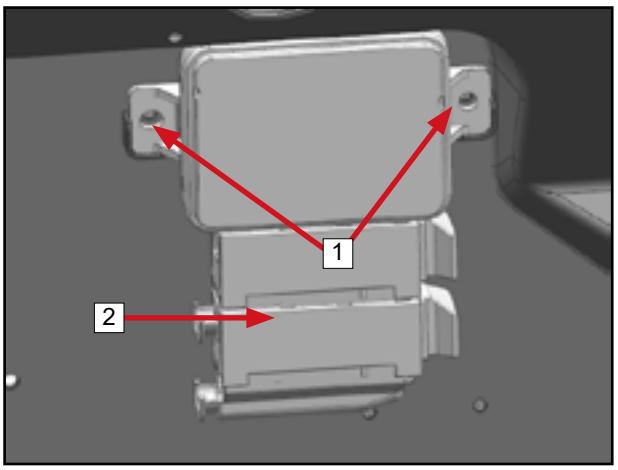

Installation

Reverse the removal procedures for installation.

© CFMOTO Powersports, Inc. This manual is subject to all applicable copyright laws. Reproduction or duplication in any form, whole or in part, is strictly prohbited.

7.1 Maintenance and Troubleshooting 07-2
7.1.1 Maintenance Information 07-2
7.1.2 Troubleshooting 07-2
7.2 CV Drive Shaft 07-3
7.2.1 Removal 07-3
7.2.2 CV Drive Shaft Inspection 07-3
7.2.2.1 Front CV Shaft Disassembly 07-4
7.2.2.2 Rear CV Shaft Disassembly 07-4
7.2.2.3 Greasing CV Joints During Reassembly 07-4
7.2.3 CV Shaft Installation 07-4
7.3 Front Drive Shaft 07-5
7.3.1 Removal / Installation 07-5
7.3.2 Maintenance 07-5
7.3.2.1 Front Drive Shaft Inspection 07-5
7.4 Front Gear Case 07-6
7.4.1 Front Gear Case Disassembly 07-7
7.4.1.1 Front Gear Case Sensor (If equipped) 07-7
7.4.2 Front Gear Case Cover 07-7
7.4.3 Differential 07-7
7.4.4 Gear Case Motor 07-8
7.4.5 Fork and Sliding Block 07-8
7.4.6 Spline Sleeve and Spline Coupler 07-9
7.4.7 Drive Bevel Gear 07-10
7.4.8 Drive Bevel Gear Disassembly 07-10
7.4.9 Differential Disassembly 07-11
7.4.10 Planetary Gear Disassembly 07-11
7.4.12 Gear Case Parts Inspection 07-13
7.4.13 Reassembly 07-15
7.4.14 Gear Case Bevel Gear Clearance Adjustment 07-16

© CFMOTO Powersports, Inc. This manual is subject to all applicable copyright laws. Reproduction or duplication in any form, whole or in part, is strictly prohbited.

7.1 Maintenance and Troubleshooting

7.1.1 Maintenance Information

Lubrication Schedule				
Item	Specification	Capacity	Interval	
Front gear case	SAE 80W-90 GL-5	280 ml	Break-in	Periodic

7.1.2 Troubleshooting

If powertrain trouble is discovered, the issue may involve the front or rear gear case. Diagnose the vehicle.

Trouble	Reason
1. Vehicle running unstable during acceleration, deceleration or normal running. 2. Front or rear gear case noise. 3. Engine power cannot be transmitted to wheels.	A. Bearing damaged B. Gear clearance too large or too small C. Gear severe wear D. Gear teeth loose E. Drive shaft damaged F. Less or more lubricant G. Foreigns in gear cases

NOTE: If reason 1, 2 or 3 cannot be determined, analyze the trouble to exclude an engine fault. Then disassemble the gear case for inspection.

Inspection and Analysis

1. Do not dismiss any strange noise:
   a. If the vehicle has noise during acceleration and deceleration, it may be wheel bearing damage.
   b. If the vehicle keeps making noise during acceleration and deceleration, it may be improper gear clearance.

NOTE
Improper adjustment and installation of the front & rear gear case can accelerate gear wear or gear teeth breakage.

   c. If the vehicle has noise at low speed, which may not be detected at high speed, it may be gear teeth that are broken.

⚠WARNING
If any fault above is found when running the vehicle, stop to check and resolve the trouble. Otherwise, it may cause an accident.

2. Inspect gear case lubrication. Check that the gear oil color is normal or not. Check for metal content in the gear oil.
3. Inspect for gear oil leaks:
   a. Inspect for oily dirt around front and rear case gear.
   b. Inspect for oil drips on the floor.
   c. Inspect for oil splash.

Determine if it is a seal leaking or case leaking. Replace the damaged parts.

© CFMOTO Powersports, Inc. This manual is subject to all applicable copyright laws. Reproduction or duplication in any form, whole or in part, is strictly prohibited.

7.2 CV Drive Shaft

7.2.1 Removal

Remove the wheel.
Remove the shock absorber.
Front: Remove the steering knuckle.
Rear: Remove the bearing carrier.

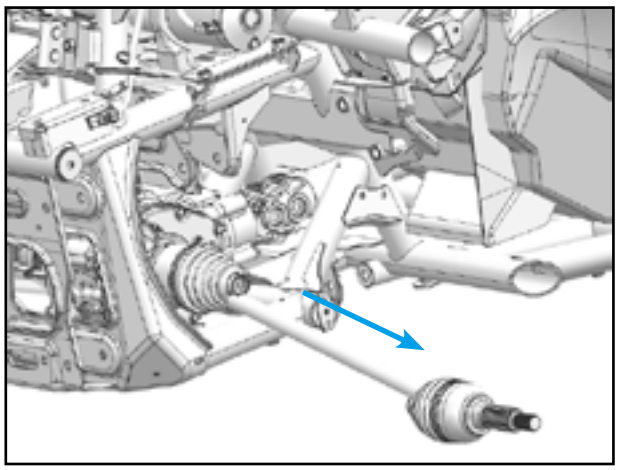

Pull out CV drive shaft in a horizonal direction.
LH and RH CV drive shafts apply the same removal procedure.

7.2.2 CV Drive Shaft Inspection

1. Steering knuckles on both sides of CV drive shafts should rotate freely within the allowable range. Disassemble to inspect or replace with new parts if any damage, like being stuck, discrete rotation or noise, is found.

2. Inspect the rotation clearance between fixed end dust boot universal shaft and middle spline. Replace with new parts if the clearance is larger than 1°30'.

3. Inspect dust boots on both sides for damage or leakage. Replace if necessary

4. Inspect shaft spline and limit circlip for abnormal wear or damage. Replace if any damage is found.

After inspection, if there are problems with the shaft while no damage is found, refer to step 5. If the shaft is in good condition, it is unnecessary to do step 5 inspection.

5. Inspect shaft cage retainer, planet sleeve, steel balls, steel ball track and middle shaft spline. Replace if any damage is found.

6. Inspect shaft other parts for damage. Replace if necessary.

© CFMOTO Powersports, Inc. This manual is subject to all applicable copyright laws. Reproduction or duplication in any form, whole or in part, is strictly prohbited.

7.2.2.1 Front CV Shaft Disassembly

Remove the clamps [1].
Push dust boots [2] towards middle shaft [3].
Remove circlip 2 [4].
Remove the LH/RH housings [5].
Remove circlip 1 [6].
Remove the universal shaft assembly [7].
Remove the dust boots [2].
Replace with new dust boots.

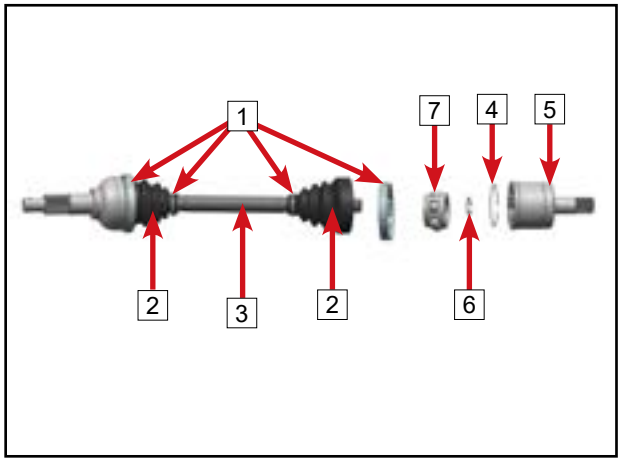

7.2.2.2 Rear CV Shaft Disassembly

Remove the clamps [1].
Push dust boots [2] towards middle shaft [3].
Take out the square circlip [4].
Remove the LH/RH housings [5].
Remove the universal shaft assembly [6].

Replace with new dust boots.

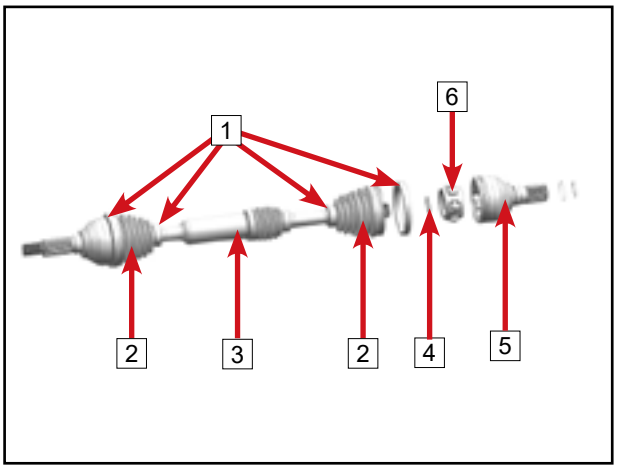

7.2.2.3 Greasing CV Joints During Reassembly

Front CV Shafts:

NOTE: When installing, fill the universal joints with TUB-A polyurea grease, 45 ±5g in the fixed ball cage universal joints, 50 ±5g in the fixed end sealing cover, and 110 ±10g in the moving ball cage universal joints.

Rear CV Shafts:

NOTE: When installing, fillwith TUB-A polyurea grease at the universal joints, 50 ±5g in the ball cage of the fixed-end universal joint and 50 ±5g in the sealing cover of the fixed-end. Fill G-2T1 grease in the sliding structure, 20 ±5g in the sliding sleeve of the mandrel, and 30 ±5g in the sealing cover of the sliding structure.

7.2.3 CV Shaft Installation

Reverse the removal procedures for installation.

© CFMOTO Powersports, Inc. This manual is subject to all applicable copyright laws. Reproduction or duplication in any form, whole or in part, is strictly prohbited.

7.3 Front Drive Shaft

7.3.1 Removal / Installation

Prework

Remove the skid plate (See Chapter 06).

Remove the fasteners securing the front gear case (See section 7.3.3).

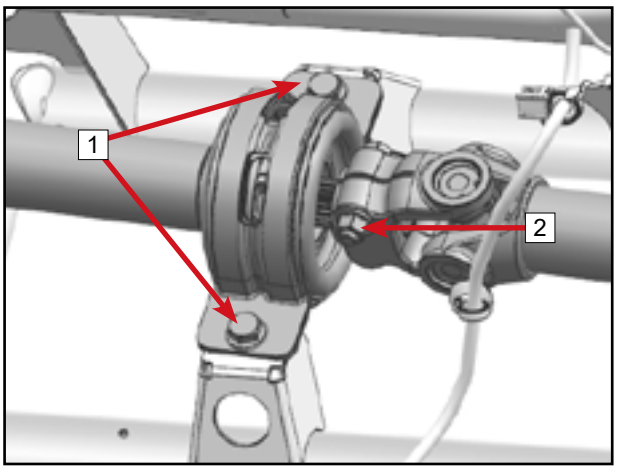

Removal

Remove the front drive shaft carrier bolts [1].

Remove the drive shaft rear section pinch bolt [2].

Disengage the drive shaft front and rear sections.

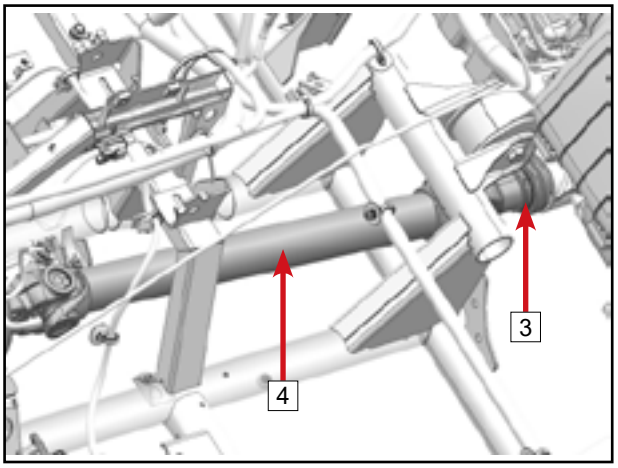

Disengage the transmission end coupler [3].

Remove the drive shaft rear section [4].

Remove the drive shaft front section pinch bolt [5].

Remove the drive shaft front section [6].

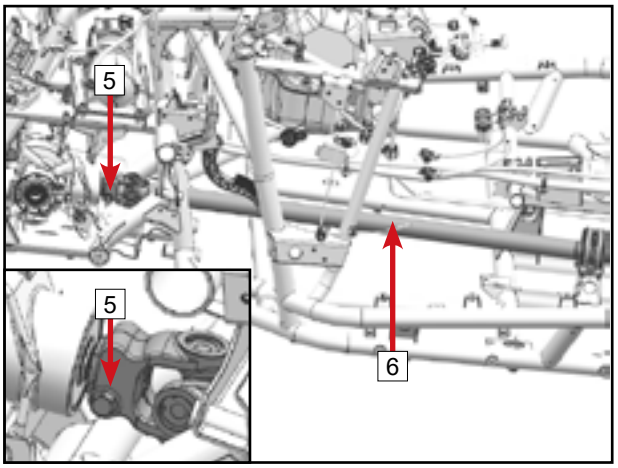

Installation

Reverse the removal procedures for installation.

7.3.2 Maintenance

7.3.2.1 Front Drive Shaft Inspection

NOTE: Disassemble to replace with new parts if the clearance is excessive, or universal joints are severely worn. Otherwise, it is not necessary to disassemble.

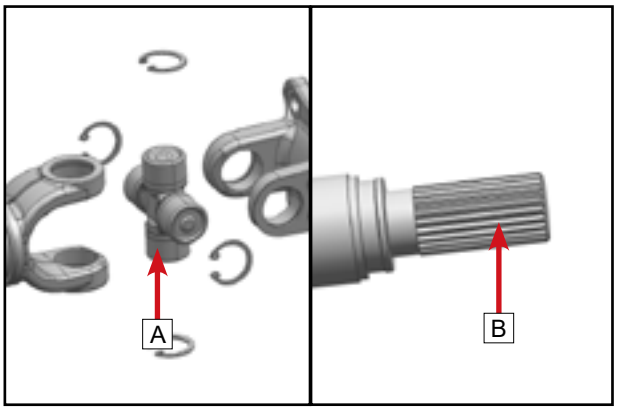

1. Inspect front drive shaft universal joints [A] on both ends for damage. Replace if necessary.
2. Inspect front drive shaft splines [B] for damage. Replace if necessary.

© CFMOTO Powersports, Inc. This manual is subject to all applicable copyright laws. Reproduction or duplication in any form, whole or in part, is strictly prohbited.

7.4 Front Gear Case

Removal

Remove the tires.

Remove the front CV drive shafts (See section 7.2).

Remove bolts [1] under the frame.

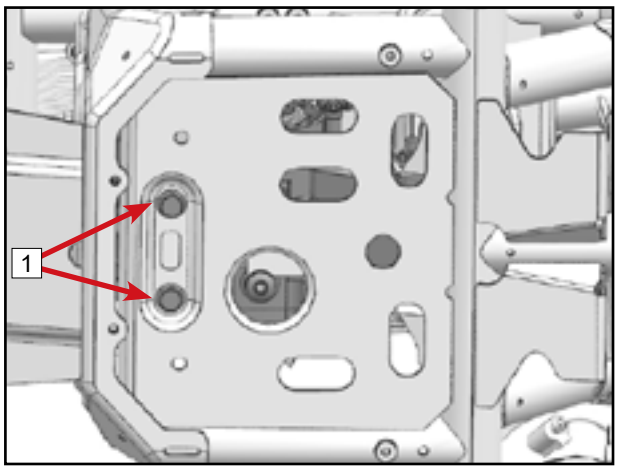

Remove mounting bolts [3] .

Remove the front drive shaft pinch bolt [4].

Remove the front gear case [5].

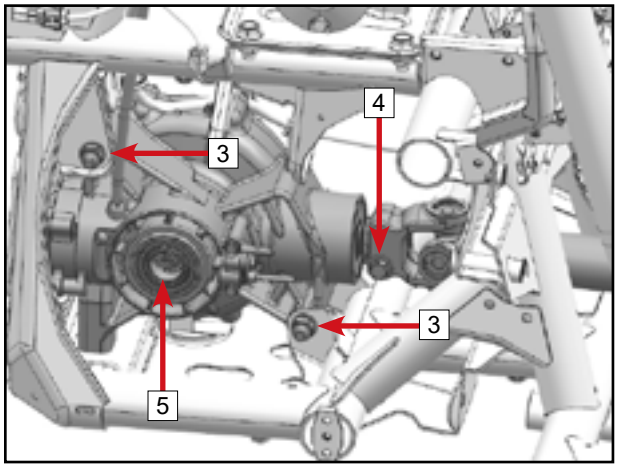

Installation

Reverse the removal procedures for installation, following the fastener torque specifications in Chapter 02.

© CFMOTO Powersports, Inc. This manual is subject to all applicable copyright laws. Reproduction or duplication in any form, whole or in part, is strictly prohbited.

7.4.1 Front Gear Case Disassembly

7.4.1.1 Front Gear Case Sensor (If equipped)

Removal

Remove two bolts 1.

Remove the sensor 2.

Remove the sensor on the other side in the same method.

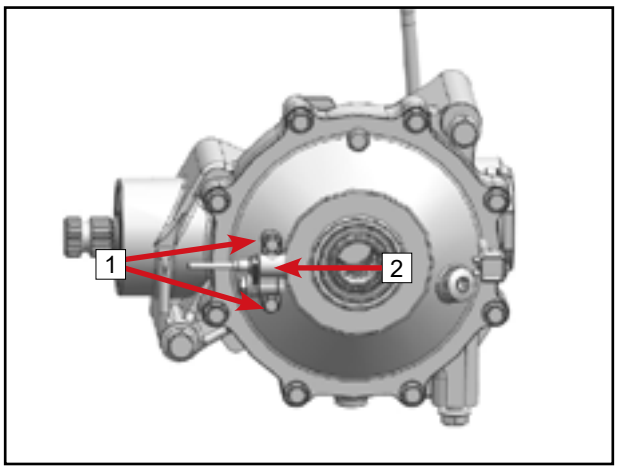

7.4.2 Front Gear Case Cover

Drain The Oil

Remove the oil drain bolt and washer 1.

Drain the oil into a container.

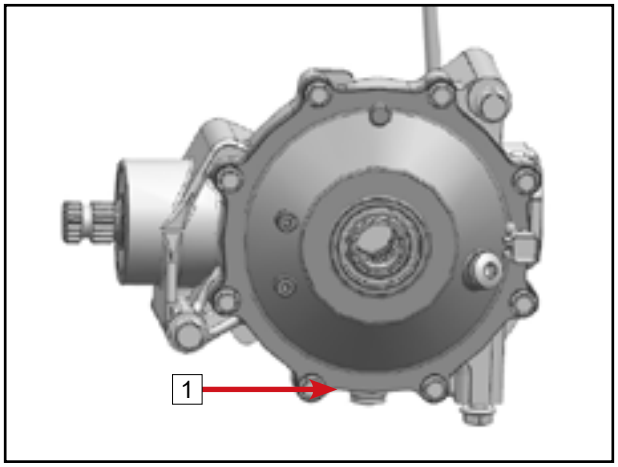

Removal

Remove eight M8 bolts 1.

Remove front gear case cover 2.

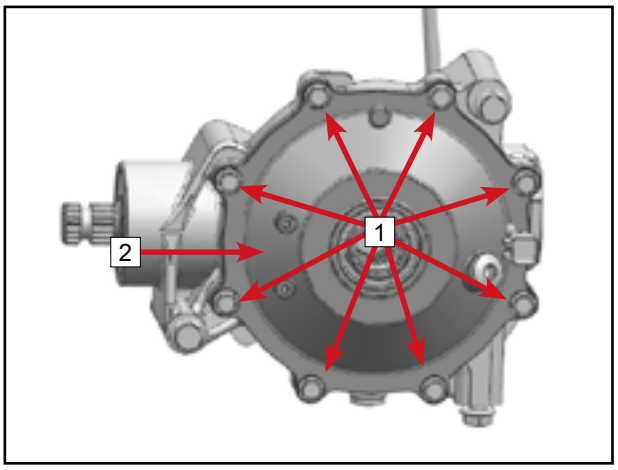

7.4.3 Differential

Removal

Take out the differential assembly 1.

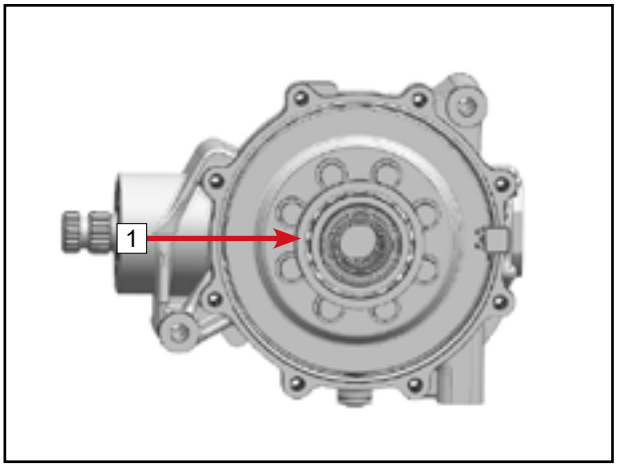

© CFMOTO Powersports, Inc. This manual is subject to all applicable copyright laws. Reproduction or duplication in any form, whole or in part, is strictly prohbited.

7.4.4 Gear Case Motor
Removal

Remove bolts 1.

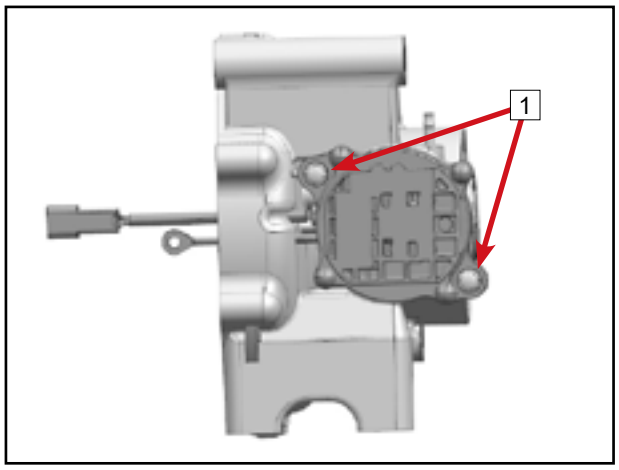

Remove the motor 2.

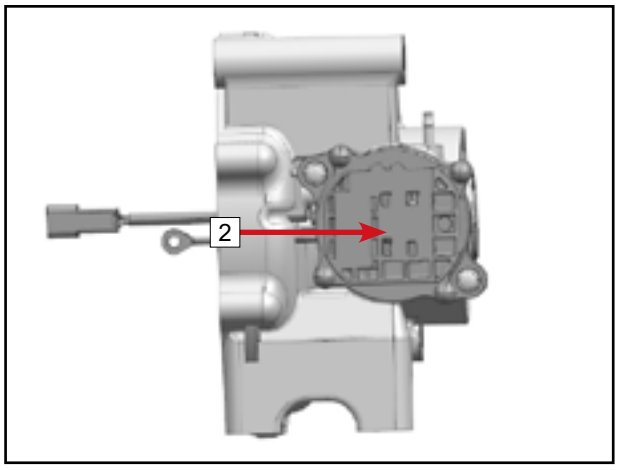

7.4.5 Fork and Sliding Block
Removal

Remove the screw 1.

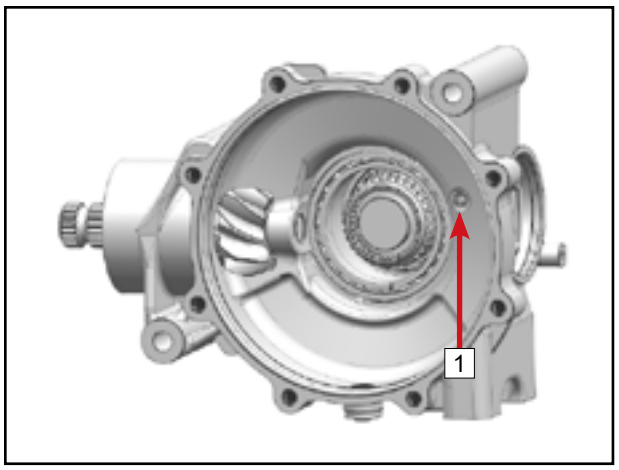

Use a needle-nose pliers to remove the pin shaft 2 in the direction of the arrow .

Remove the fork and sliding block assembly 3.

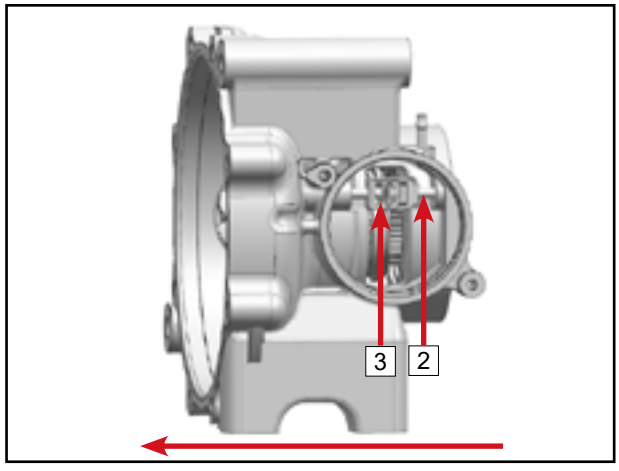

© CFMOTO Powersports, Inc. This manual is subject to all applicable copyright laws. Reproduction or duplication in any form, whole or in part, is strictly prohibited.

7.4.6 Spline Sleeve and Spline Coupler Removal

Remove the spline sleeve 1.

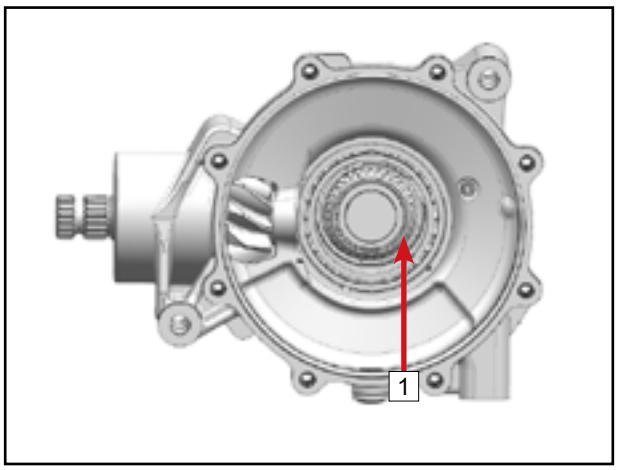

Remove the guide pin and splined coupler 2.

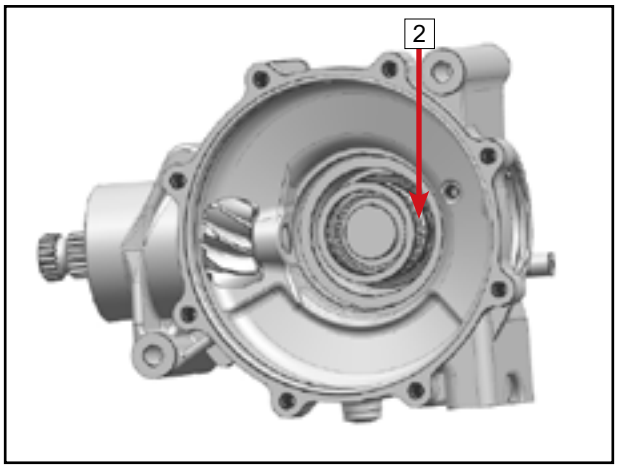

Remove the circlip 3.

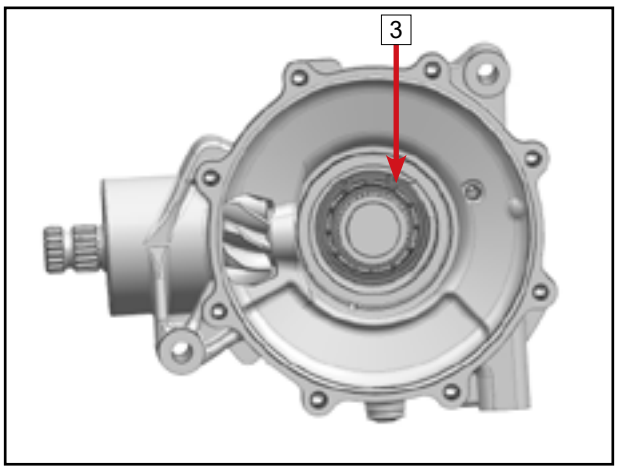

Remove the bearing 4.

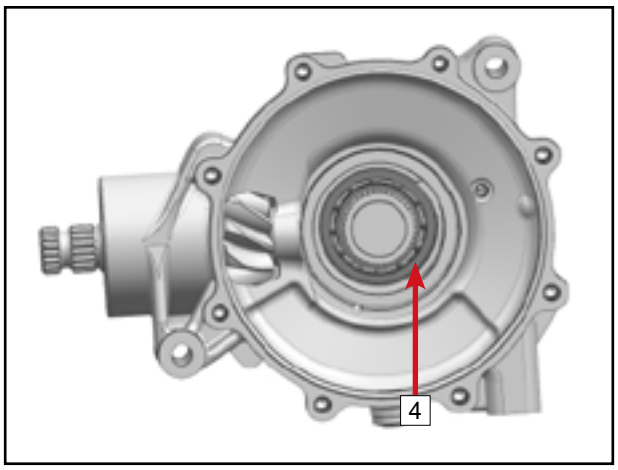

© CFMOTO Powersports, Inc. This manual is subject to all applicable copyright laws. Reproduction or duplication in any form, whole or in part, is strictly prohbited.

7.4.7 Drive Bevel Gear Removal

Remove the oil seal 1.

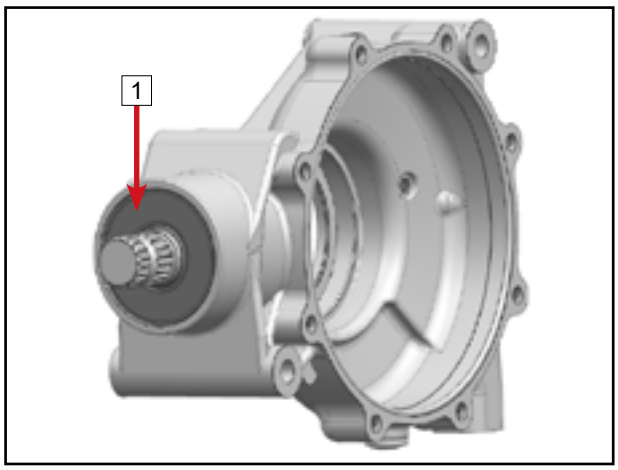

Remove the ring retainer 2.

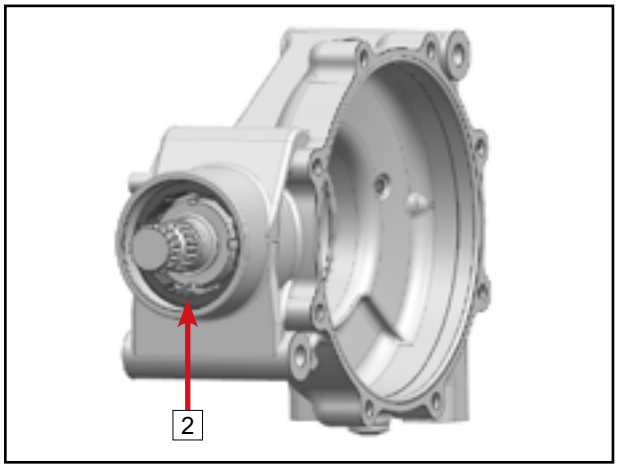

Remove the drive bevel gear 3.

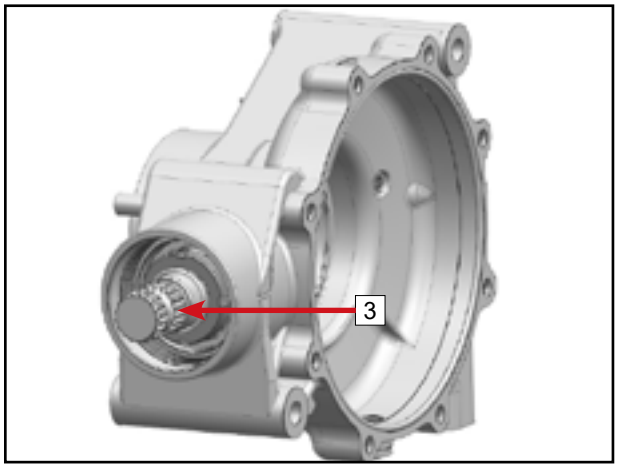

7.4.8 Drive Bevel Gear Disassembly Removal

Remove the ring retainer 1.

Remove the bearing assembly 2 and the adjusting shim 3 from the drive bevel gear 4.

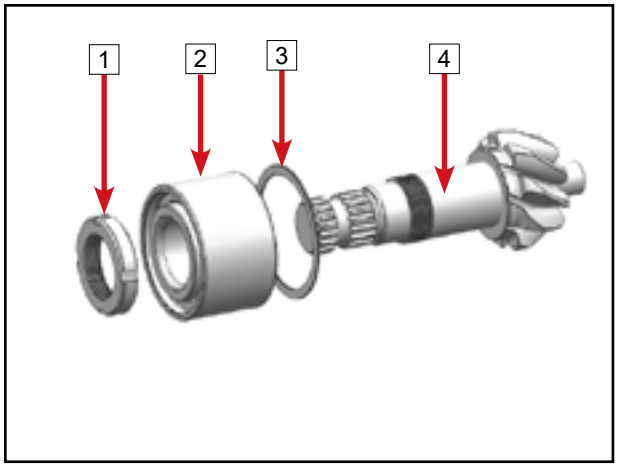

© CFMOTO Powersports, Inc. This manual is subject to all applicable copyright laws. Reproduction or duplication in any form, whole or in part, is strictly prohibited.

7.4.9 Differential Disassembly
Removal

Remove the bolts and washers 1.

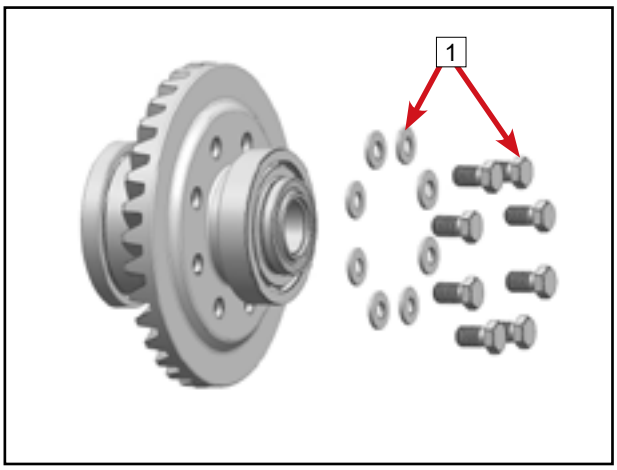

Remove the driven bevel gear 2.

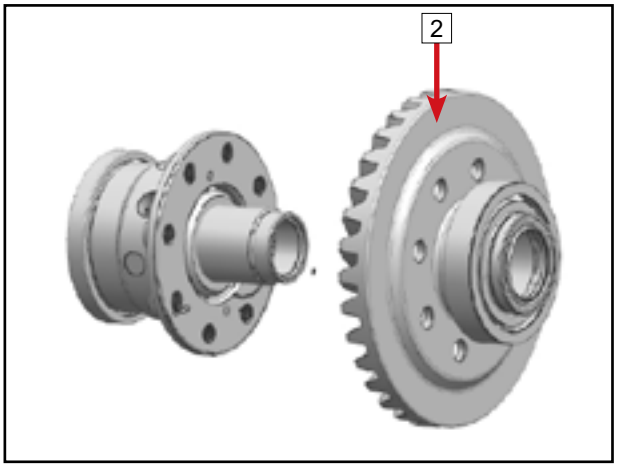

Remove the RH CV shaft gear 3.

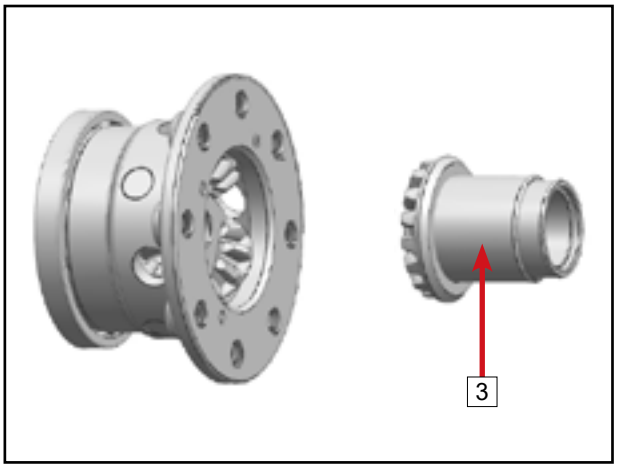

7.4.10 Planetary Gear Disassembly

Remove the pin shafts 1.

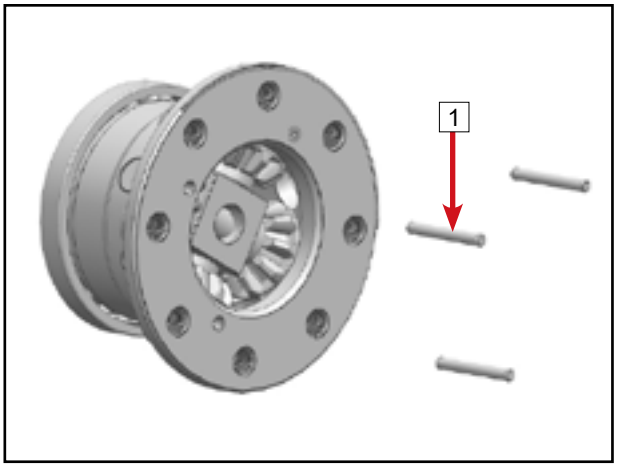

© CFMOTO Powersports, Inc. This manual is subject to all applicable copyright laws. Reproduction or duplication in any form, whole or in part, is strictly prohbited.

Remove the short planetary gear shafts 2.
Remove the long planetary gear shaft 3.

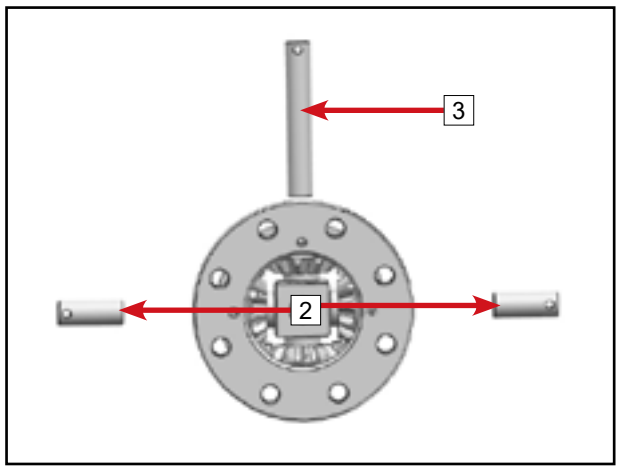

Remove the cross sleeve 4.

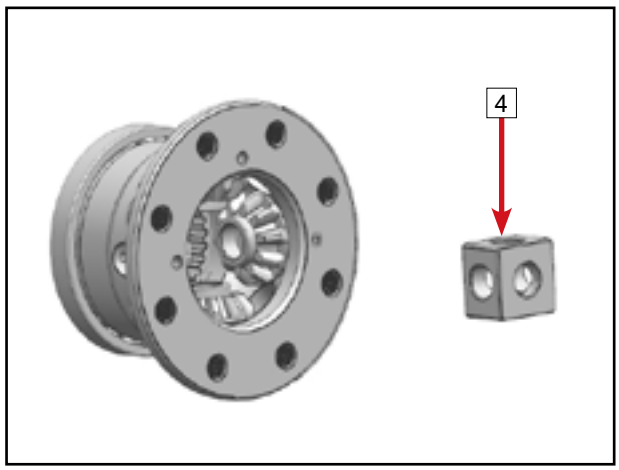

Remove the differential gears 5.

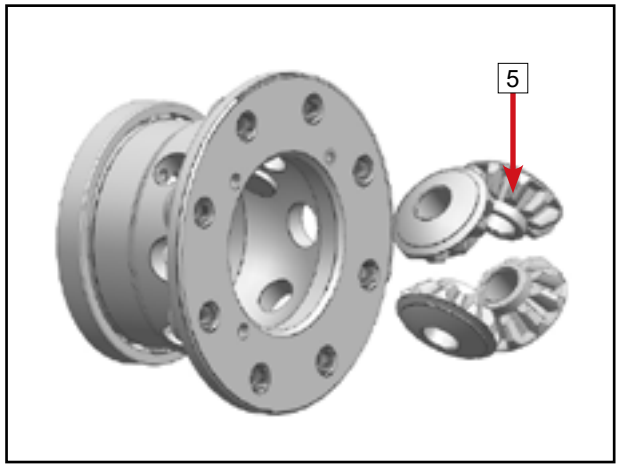

Remove the LH CV shaft gear 6.

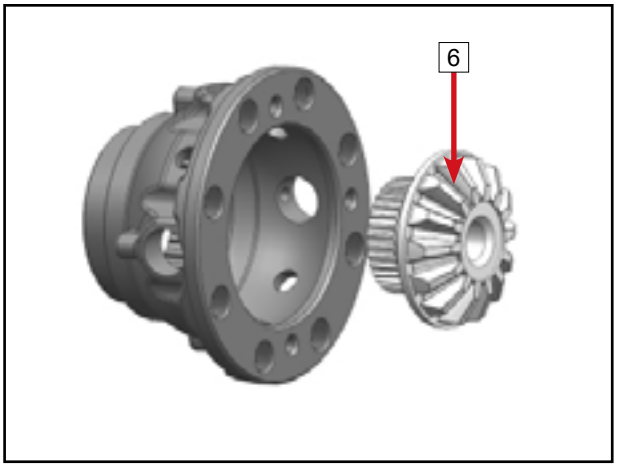

© CFMOTO Powersports, Inc. This manual is subject to all applicable copyright laws. Reproduction or duplication in any form, whole or in part, is strictly prohbited.

Remove the adjusting shim 7.

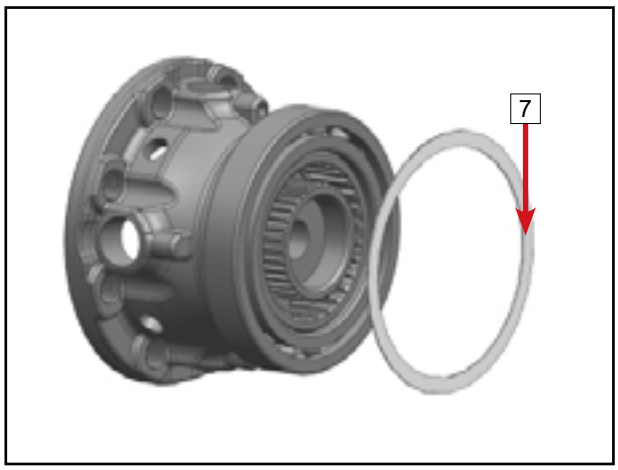

Remove the bearing 8.

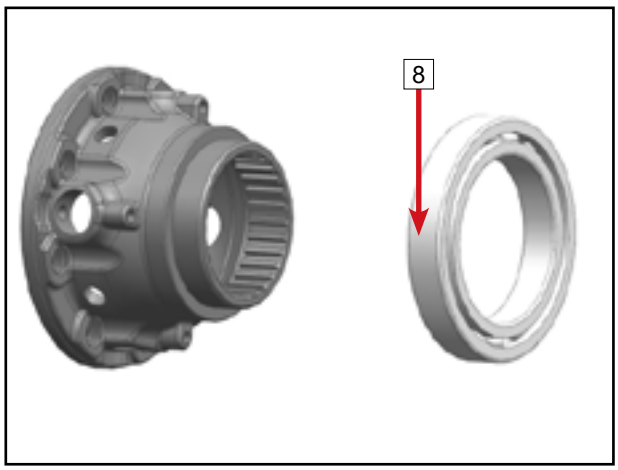

7.4.12 Gear Case Parts Inspection

Spline Sleeve Assembly Inspection

Check spline sleeve coupler 1 and spline sleeve 2 for broken, damaged, excessive wear or missing teeth, and replace them with new parts if damaged.

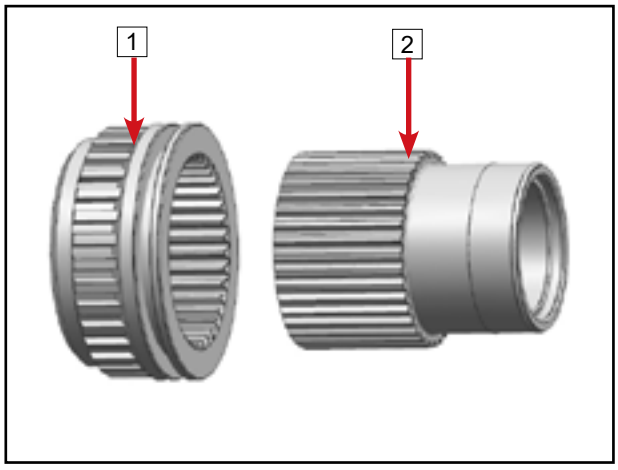

Block and Fork Assembly Inspection

Check the block and fork assembly 1 for shattering, cracking, excessive wear or obvious deformation. Replace if damage is found.

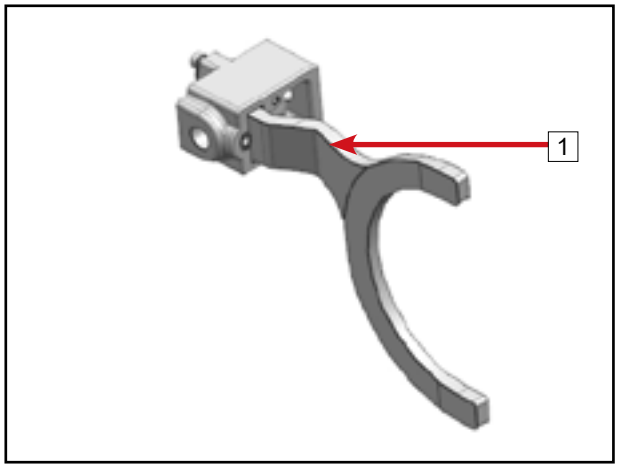

© CFMOTO Powersports, Inc. This manual is subject to all applicable copyright laws. Reproduction or duplication in any form, whole or in part, is strictly prohibited.

Gear Motor Inspection

Remove the gear motor [1]. Connect to the vehicle harness and activate the 2WD/4WD switch to verify if it works. Replace with a new part if it does not.

Check the torsion spring for obvious deformation or damage. If damaged, replace the gear motor with a new one.

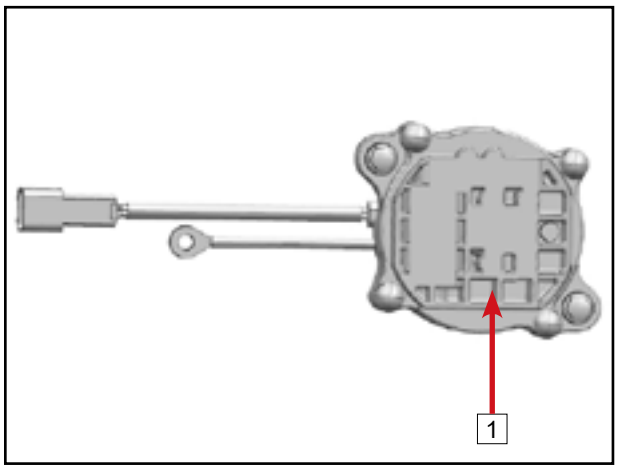

Oil Seal Inspection

All seals [1] are removed and discarded as waste. Replace with new seals during installation.

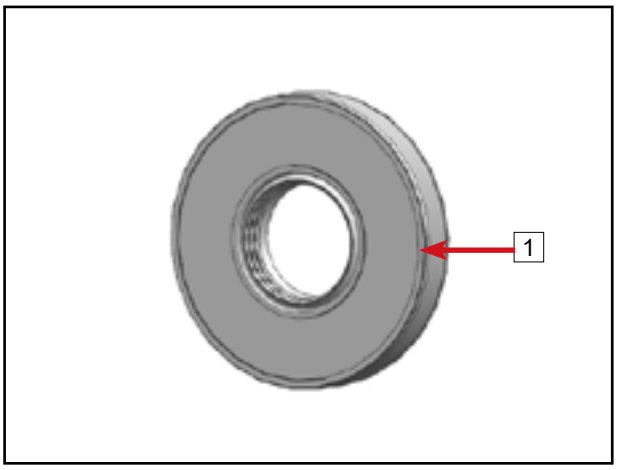

Bearing Inspection

Inspect that every bearing [1] clearance is appropriate, rotation is smooth, raceway, steel balls, needle roller and retainer are in good condition. Replace if any damage is found.

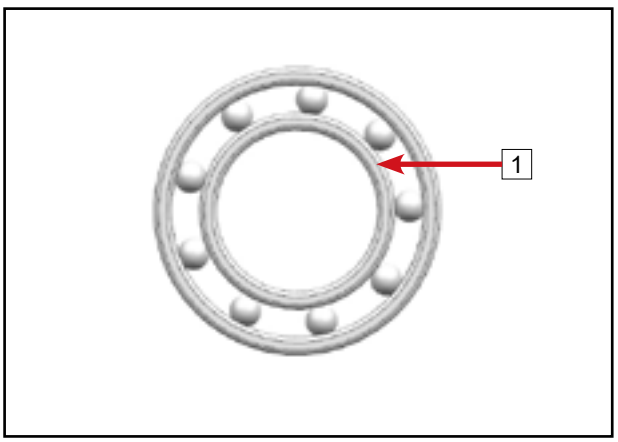

O-ring Inspection

Inspect every O-ring [1] for deformation, broken or damage. Replace with new if any damage is found.

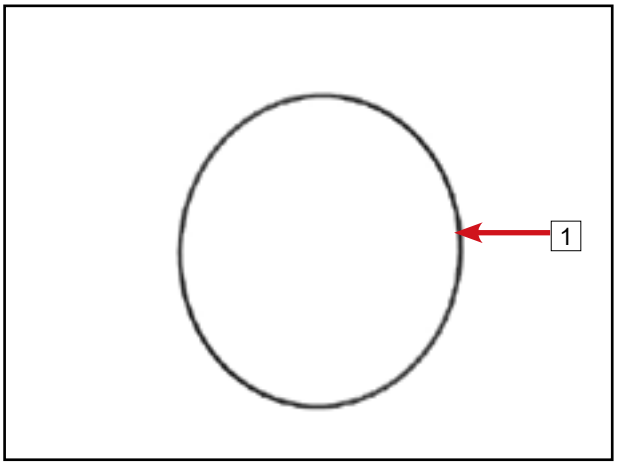

NOTE: Before installation, clean the case and gear parts with cleaning agent. O-rings cannot be cleaned with kerosene or gasoline. After cleaning, wipe clean with a lint-free cloth before assembly. During assembly, all parts must be kept clean.

© CFMOTO Powersports, Inc. This manual is subject to all applicable copyright laws. Reproduction or duplication in any form, whole or in part, is strictly prohbited.

7.4.13 Reassembly

Installation

Reverse the removal procedures for installation.

Front Gear Case Drive Bevel Gear Reassembly

Install front gear case drive bevel gear [1].
Install washer [2].
Install the bearing assembly [3].
Install the small round nut [4].
Install the lock nut [5].
Install oil seal [6].

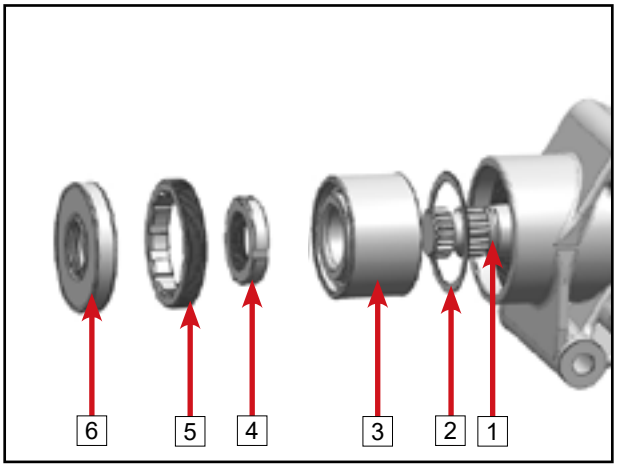

NOTE A: Before front gear case motor installation, verify the motor is set to 2WD mode with special device or the vehicle control circuit.

NOTE B: During front gear case motor installation, block assembly and spline bushing should be closed as shown in the image.

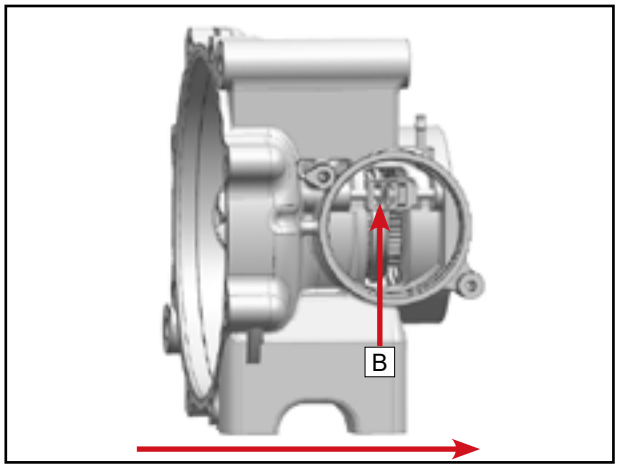

NOTE: During front gear case motor and front gear case assembly installation. In the premise of NOTE A and B, install the motor with dowel screws during installation.

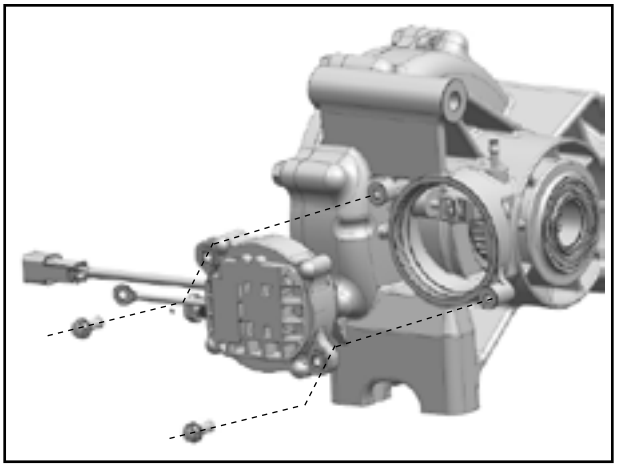

© CFMOTO Powersports, Inc. This manual is subject to all applicable copyright laws. Reproduction or duplication in any form, whole or in part, is strictly prohibited.

7.4.14 Gear Case Bevel Gear Clearance Adjustment

Follow the image on the right to adjust clearance:

Install auxiliary measuring tool.

Tighten a bolt (M14×1.25×60) in the drain hole and set the dial gauge.

Ensure that the distance between the test point of the meter and the center of the measuring tool is 20.73 mm.

Rotate the measuring tool in the forward and reverse directions to read the dial guage data.

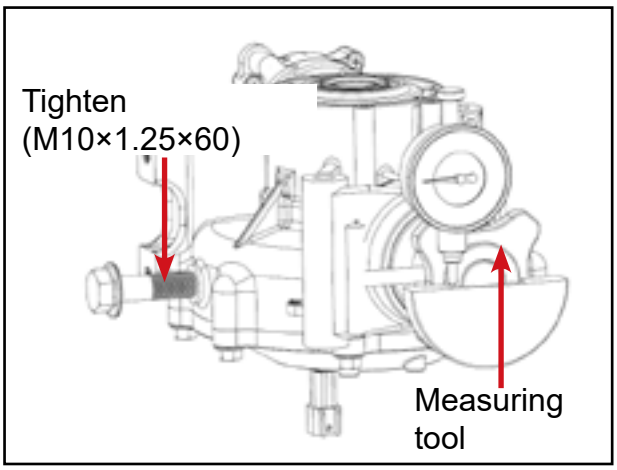

Bevel Gear Clearance Standard: 0.1 – 0.25

Adjusting washer thickness	0.1, 0.2, 0.3, 0.4, 0.5, 1.00

NOTE: Measure at 3 points until the adjustment is qualified. If the data is beyond the standard, repeat above procedures and make adjustments.

Gear Surface Contact Inspection

After bevel gear clearance adjustment, check gear contact as follows:

Remove driven bevel gear assembly from gear case.

Clean the drive and driven bevel gears.

Apply dye on every tooth of the driven bevel gear.

Install the drive bevel gear.

Turn the drive bevel gear a few turns back and forth.

Remove drive and driven bevel gear assembly and check the dye removal pattern on the driven bevel gear.

© CFMOTO Powersports, Inc. This manual is subject to all applicable copyright laws. Reproduction or duplication in any form, whole or in part, is strictly prohbited.

Status ①	Contact on the top	Improper
Status ②	Contact in the middle	Proper
Status ③	Contact on the bottom	Improper

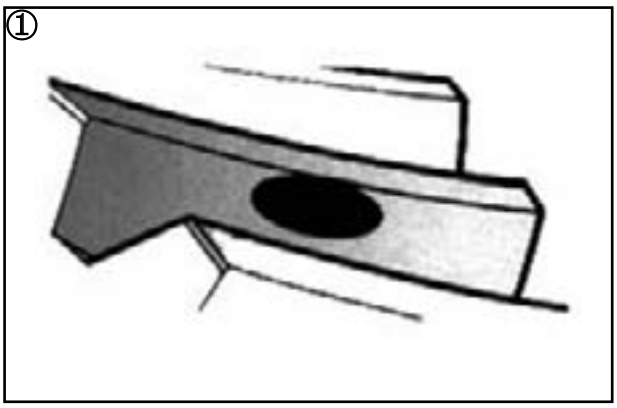

If it is proper gear contact surface (status ②), move on to next step.

If it is improper gear contact surface ① and ③ , adjust washer thickness of bevel gear and recheck until the gear contact surface is qualified.

NOTE: After adjustment, clean the dye from the gear surfaces.

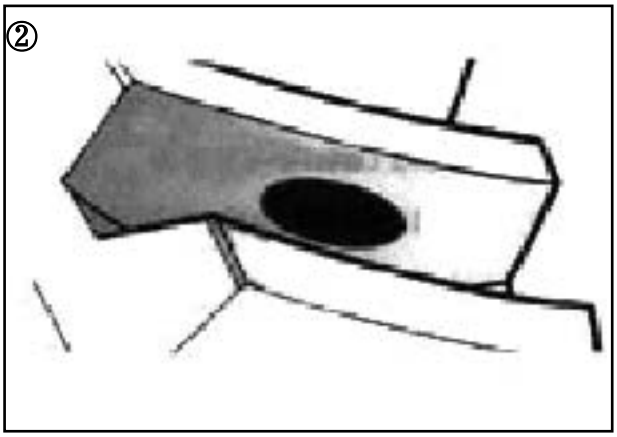

Adjusting Method

Contact surface	Washer thickness
Status ①	Reduce washer thickness
Status ③	Increase washer thickness

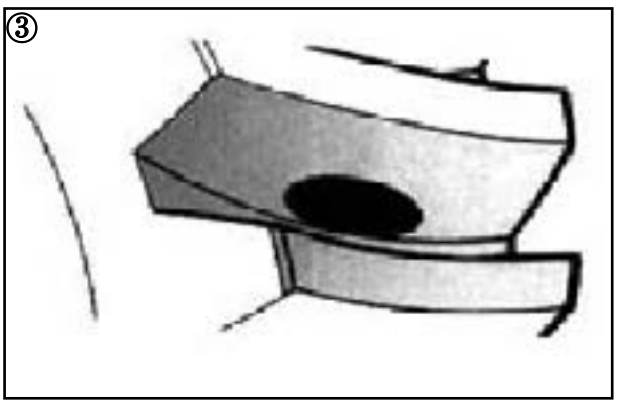

⚠WARNING: Inspect clearance after adjusting the gear contact surface to prevent any change. Replace the drive and driven bevel gear if gear contact surface is still improper after clearance adjusting. The gear surface contact and gear clearance should meet both requirements.

© CFMOTO Powersports, Inc. This manual is subject to all applicable copyright laws. Reproduction or duplication in any form, whole or in part, is strictly prohbited.

Blank Remarks / Notes Page

© CFMOTO Powersports, Inc. This manual is subject to all applicable copyright laws. Reproduction or duplication in any form, whole or in part, is strictly prohbited.

8.1 Brake System View (Status 1 - Select Markets) 08-2
8.2 Brake System View (Status 2) 08-3
8.3 Brake Noise Troubleshooting 08-4
8.4 Brake Calipers 08-5
8.4.1 Front Brake Caliper 08-5
8.4.2 Rear Brake Caliper 08-5
8.5 Brake Disc and Wheel Hub Assembly 08-6
8.6 Master Cylinder 08-7
8.7 Brake Fluid Inspection 08-9
8.8 Brake Fluid Filling 08-10
8.9 Brake Fluid Replacement 08-11
8.10 Brake Pedal 08-13
8.11 Parking System (Select Markets) 08-14

© CFMOTO Powersports, Inc. This manual is subject to all applicable copyright laws. Reproduction or duplication in any form, whole or in part, is strictly prohbited.

8.1 Brake System View (Status 1 - Select Markets)

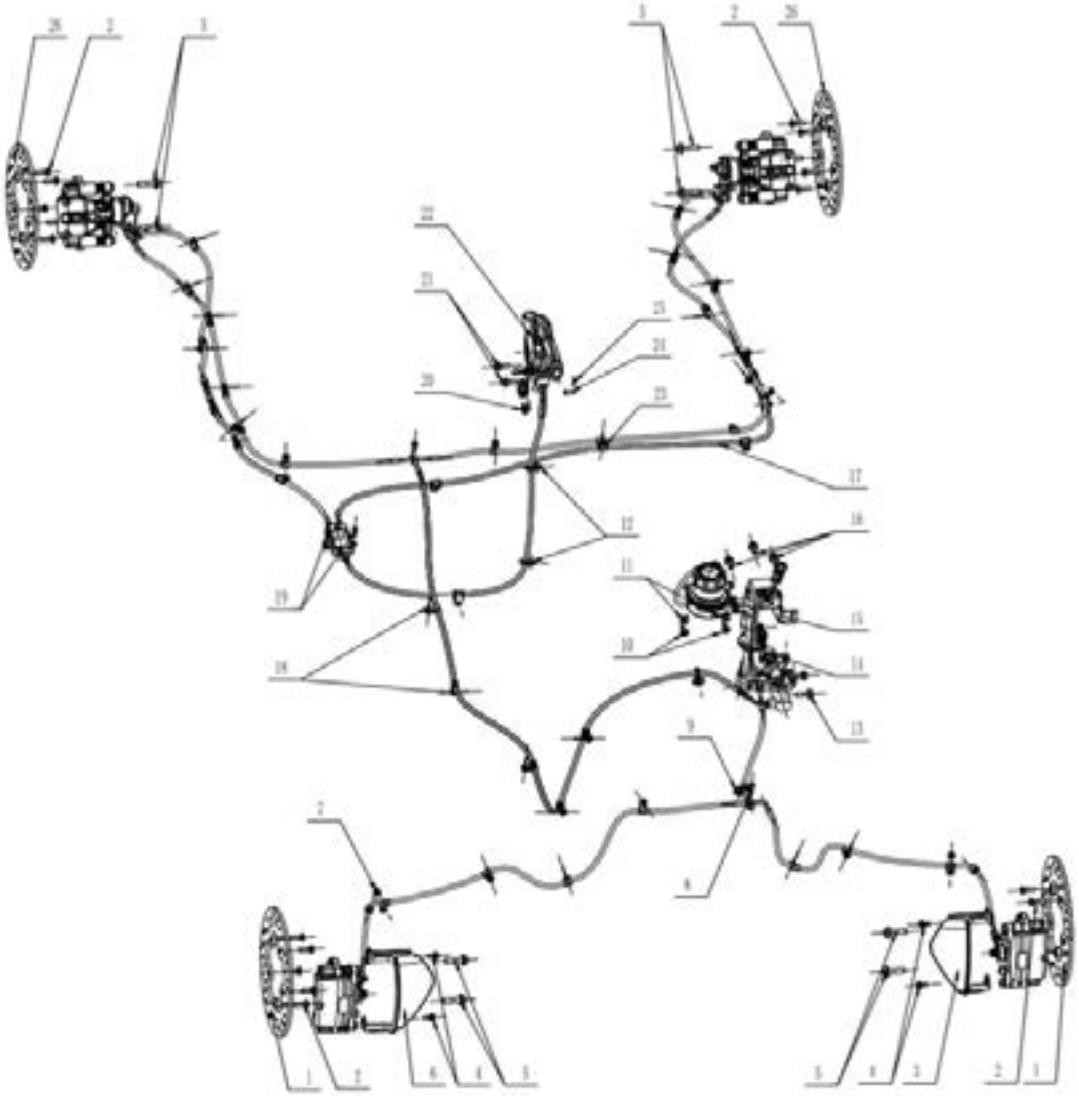

1	Front brake disc	2	Brake disc mounting screw	3	Front LH brake caliper guard
4	Flange bolt M6×12	5	Bolt	6	Front RH brake caliper guard
7	Bolt	8	Screw	9	Cable tie
10	Bolt	11	M6 nut clip	12	Cable tie
13	Bolt	14	Cable tie	15	Brake pedal assembly
16	Bolt	17	Parking cable	18	Blind rivet
19	Screw	20	Clip	21	Bolt
22	Parking lever assembly	23	LH hose clip I	24	Pin shaft
25	Cotter pin	26	Rear brake disc	27	Hydraulic brake assembly

© CFMOTO Powersports, Inc. This manual is subject to all applicable copyright laws. Reproduction or duplication in any form, whole or in part, is strictly prohibited.

8.2 Brake System View (Status 2)

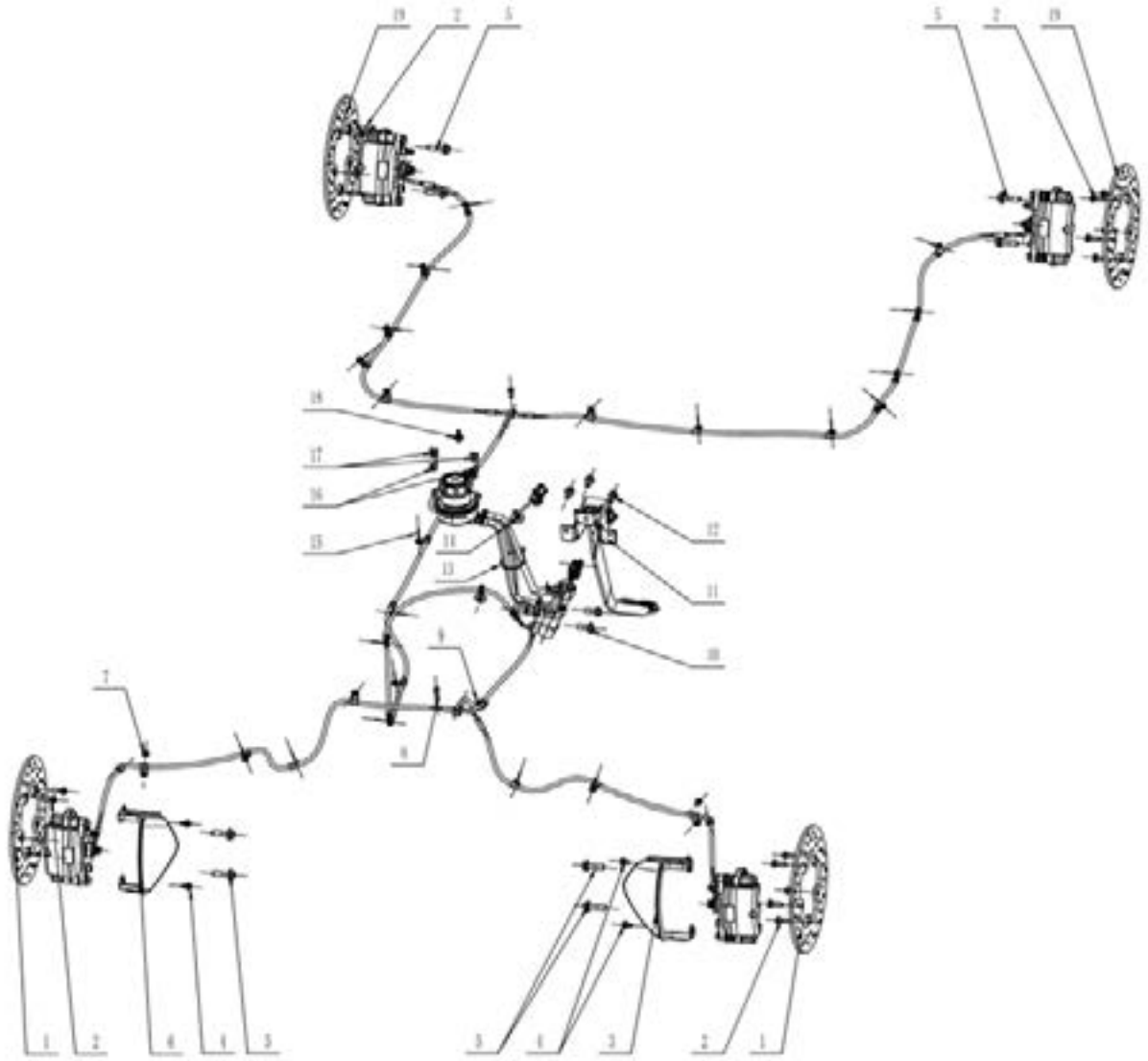

1	Front brake disc	2	Brake disc mounting screw	3	Front LH brake caliper guard
4	Flange bolt	5	Bolt	6	Front RH brake caliper guard
7	Bolt	8	Screw	9	Cable tie
10	Bolt	11	Brake pedal assembly	12	Bolt
13	Cable tie	14	Cable tie	15	Blind rivet
16	Bolt	17	M6 nut clip	18	Cable tie
19	Rear brake disc				

© CFMOTO Powersports, Inc. This manual is subject to all applicable copyright laws. Reproduction or duplication in any form, whole or in part, is strictly prohbited.

8.3 Brake Noise Troubleshooting

Posible Reason	Method
Dirt or dust on the brake pads or disc causing brake noise.	Remove brake pads or brake discs to clean. Do not use corrosive cleaning liquid. Replace if necessary.
Brake pads interfere brake disc: Improper adjustment Too much brake fluid in reservoir Master cylinder piston not returning Driver improper operation (ride the brake)	 Adjust brake pads Make sure the brake fluid level is between upper and lower line Check master cylinder piston function Train driver for safety use
Brake disc severely worn	Replace
Brake disc loosened	Inspect and service. Replace if necessary. Install new parts and torque to specification

⚠WARNING: Once opening a new bottle of brake fluid, properly deal with the rest according to local regulations. Do not store or use a non-full bottle. Brake fluid has strong water absorption feature and can absorb moisture in the air, which can cause premature brake failure, resulting in personal injury.

© CFMOTO Powersports, Inc. This manual is subject to all applicable copyright laws. Reproduction or duplication in any form, whole or in part, is strictly prohbited.

8.4 Brake Calipers

8.4.1 Front Brake Caliper

Removal

Pre-work: Remove the front wheels (see Section 9.3 for details)
Remove two bolts 1.
Remove front RH brake caliper 2.
Remove banjo bolt 3.
Remove the pipe 4.
The front LH brake caliper is removed in the same way.

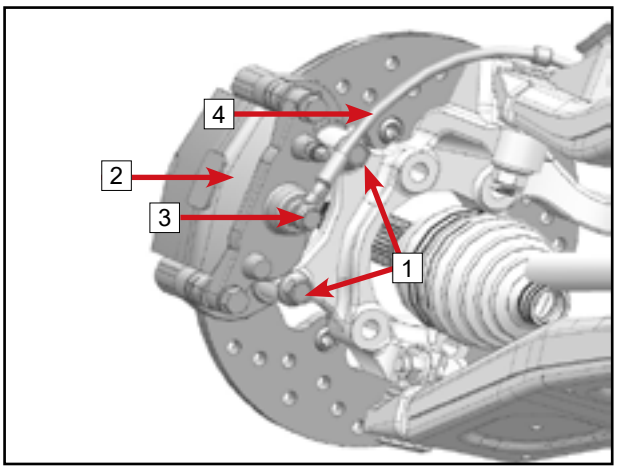

Installation

Reverse the removal procedures for installation. Refer to Chapter 02 for torque specifications.

8.4.2 Rear Brake Caliper

Removal

Pre-work: Remove the rear wheels (see Section 9.1 for details)
Remove the two bolts 5.
Remove rear RH brake caliper 6.
Remove banjo bolt 7.
Remove the pipe 8.
The rear LH brake caliper is removed in the same way.

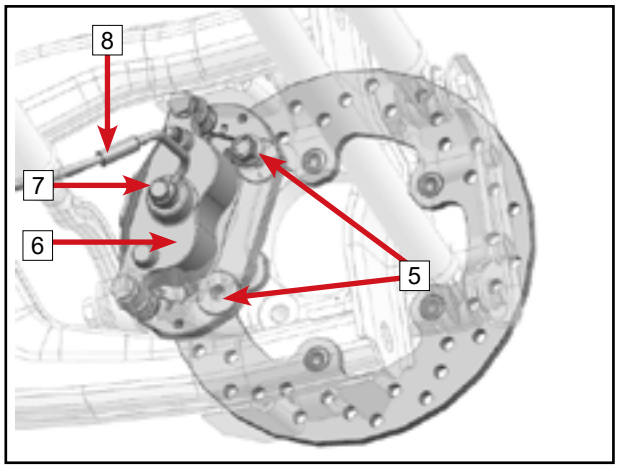

Installation

Reverse the removal procedures for installation. Refer to Chapter 02 for torque specifications.

Friction Pad Inspection

Check the minimum thickness of the brake friction pads.
Minimum friction pad thickness A ≥ 2 mm.
If less than the minimum thickness, replace with new brake friction pads.
Inspect the brake friction pads for damage or cracks.
Replace if any damage is found.

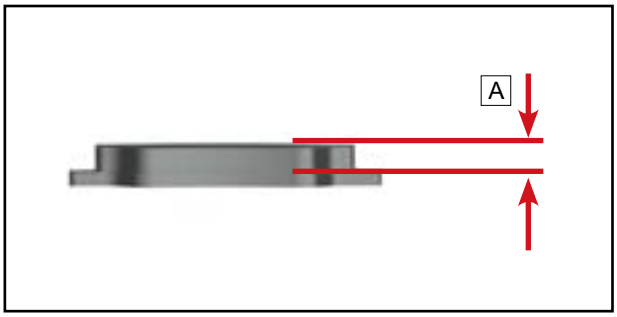

© CFMOTO Powersports, Inc. This manual is subject to all applicable copyright laws. Reproduction or duplication in any form, whole or in part, is strictly prohibited.

⚠WARNING: Brake friction disc damage will reduce braking effect, which can cause accidents. If the brake pad is too thin, steel bracket will rub the brake disc, which will severely reduce the braking effect and damage the brake friction disc. Inspect them periodically.

NOTE: Always replace the brake friction discs in pairs.

Inspect the brake caliper for damage or cracks.
Replace if necessary.

Installation
Reverse the removal procedures for installation. Refer to Chapter 02 for torque specifications.

8.5 Brake Disc and Wheel Hub Assembly

Removal
Remove cotter pin [1].
Remove slotted flange nut [2].

Remove the fixing bolts [3].
Remove brake disc and hub assembly [4]

Inspection
Check the sliding surface of the brake disc for wear and damage, replace if necessary.
If the brake disc thickness is [A] ≤ 6.5 mm, replace.

Brake Disc Replacement
Remove five M8 front brake disc inner hex bolts [5].
Replace the brake disc and install the M8 front brake disc inner hex bolts.

Front brake disc inner hex bolt torque requirements:
30 ~ 35 N•m

Installation
Reverse the removal procedures for installation. Refer to Chapter 02 for torque specifications.

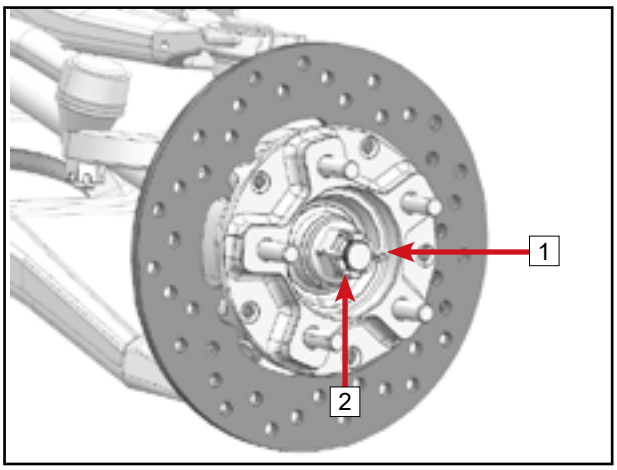

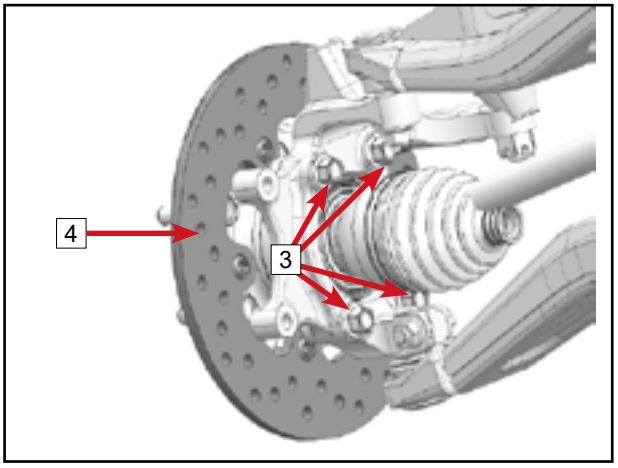

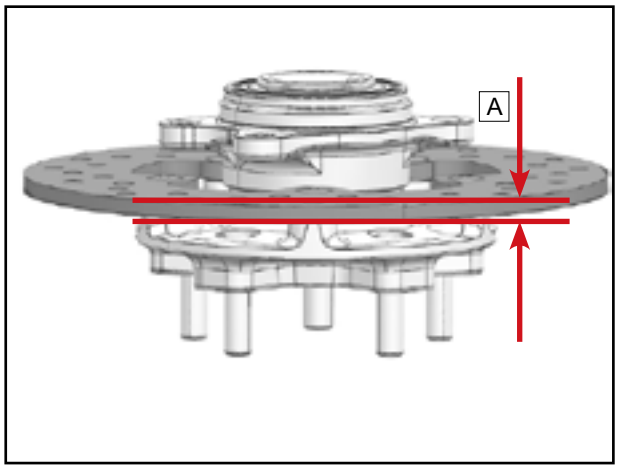

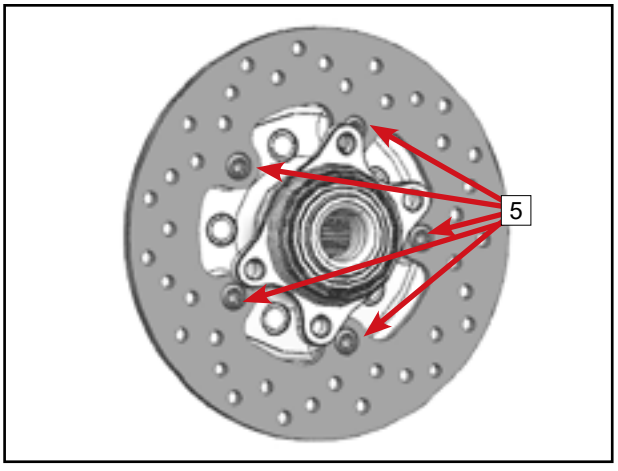

© CFMOTO Powersports, Inc. This manual is subject to all applicable copyright laws. Reproduction or duplication in any form, whole or in part, is strictly prohibited.

GO TO CHAPTER INDEX

8.6 Master Cylinder

Removal

Pre-work

Remove brake pedal (See section 8.10)

Remove bolts 1.

Loosen the master cylinder 2.

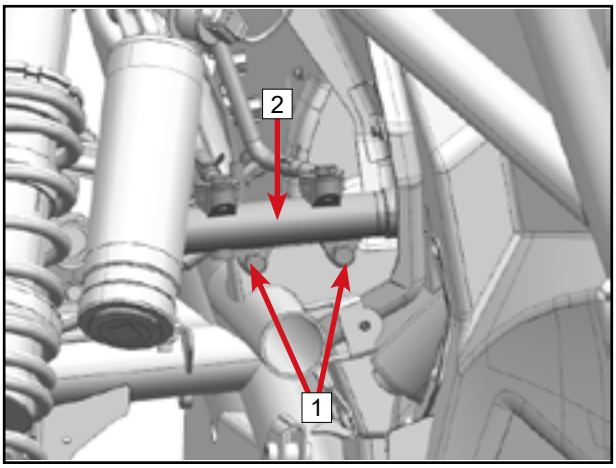

Remove the connector 2 from the master cylinder wiring harness.

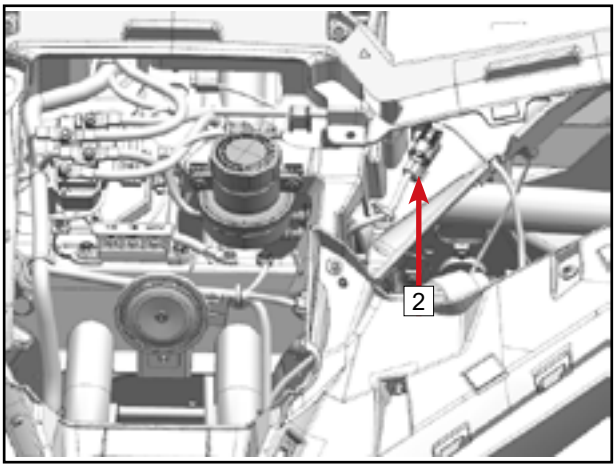

Remove rear brake hose 2.

Remove hydraulic brake switch 3 and front brake hose 4 at the same time.

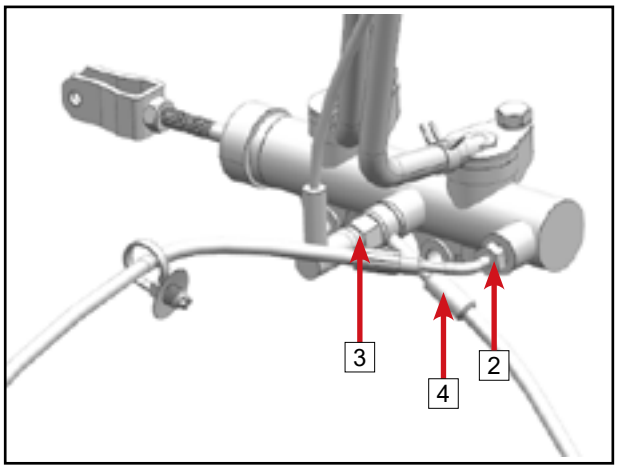

Loosen master cylinder pipe clamps 5.

Remove reservoir hoses 6.

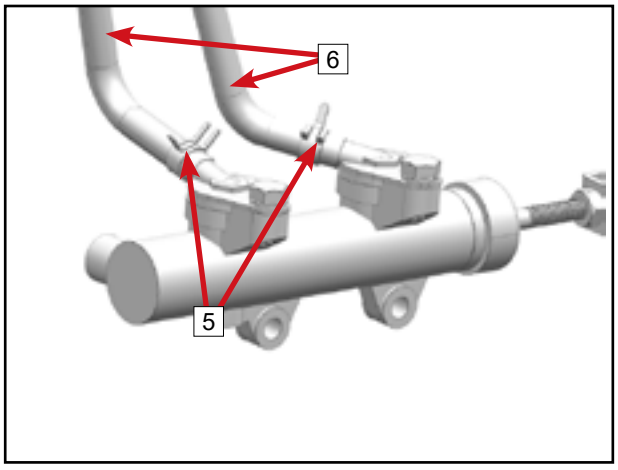

© CFMOTO Powersports, Inc. This manual is subject to all applicable copyright laws. Reproduction or duplication in any form, whole or in part, is strictly prohbited.

GO TO CHAPTER INDEX

Inspection
Check whether the master cylinder can return to its normal position.

If it is confirmed that the brake fluid is sufficient and it still cannot return to the normal position after venting, replace the brake master cylinder 2.

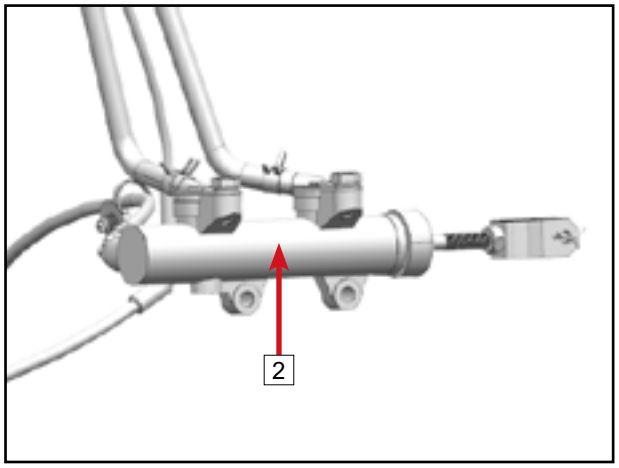

Check whether each hose is excessively worn or has luid leakage.

Check if the clamps have cracks or are unable to lock the hose.
If damaged, replace it.



Installation
Install reservoir hoses 1.
Install master cylinder pipe clamps 2.

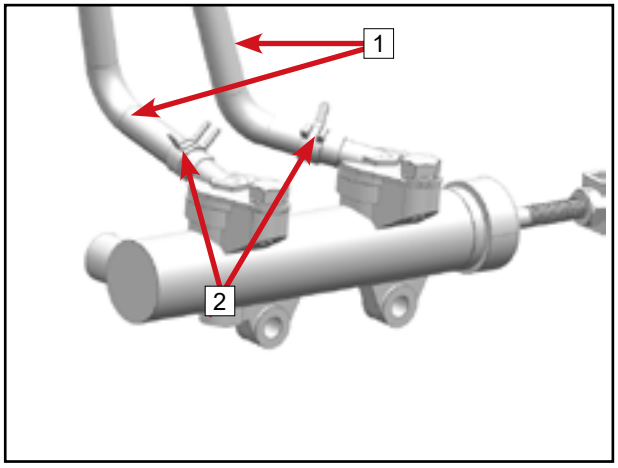

Install front brake caliper hose 3 and hydraulic induction switch 4.
NOTE: When installing, insert in sequence: washer - brake hose - washer.
Torque: 35 ~ 40 N•m

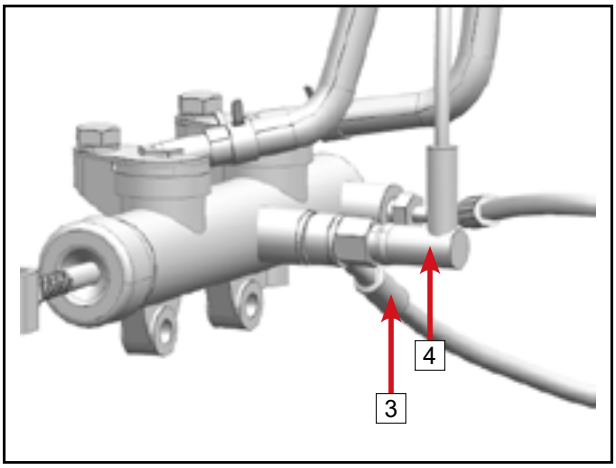

© CFMOTO Powersports, Inc. This manual is subject to all applicable copyright laws. Reproduction or duplication in any form, whole or in part, is strictly prohbited.

Install rear brake hose and bolt 5.
Bolt Torque: 35 ~ 40 N•m

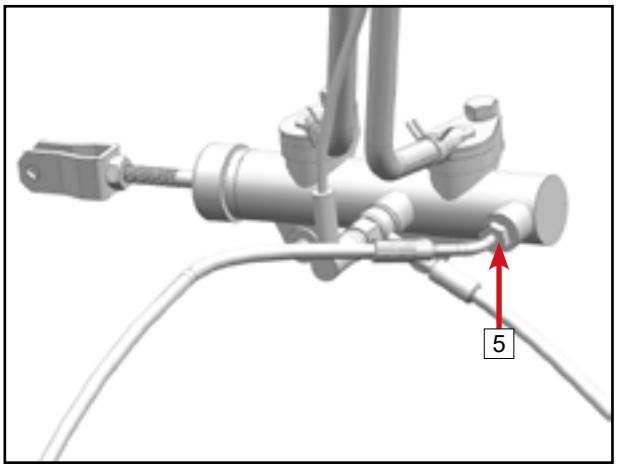

Install bolts 6.
Bolt Torque: 20 ~ 30 N•m

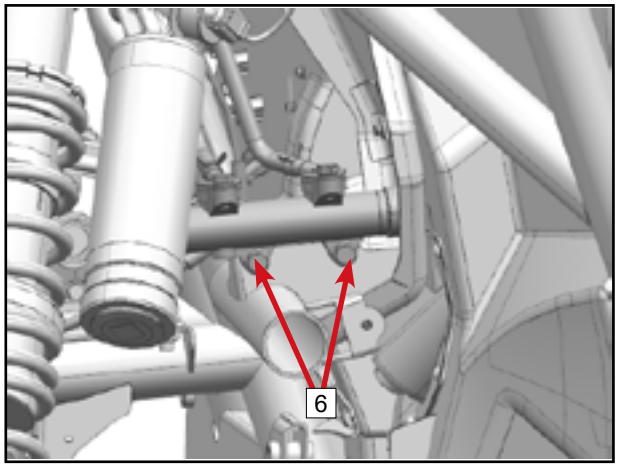

8.7 Brake Fluid Inspection

Remove the front top cover 1.

NOTE:
Brake fluid has strong water absorption feature. If water enters into brake fluid, it will cause boiling point depression and brake failure. Thus, brake fluid should be sealed and stored away from a humid environment.
The brake fluid cannot be used if contaminated.

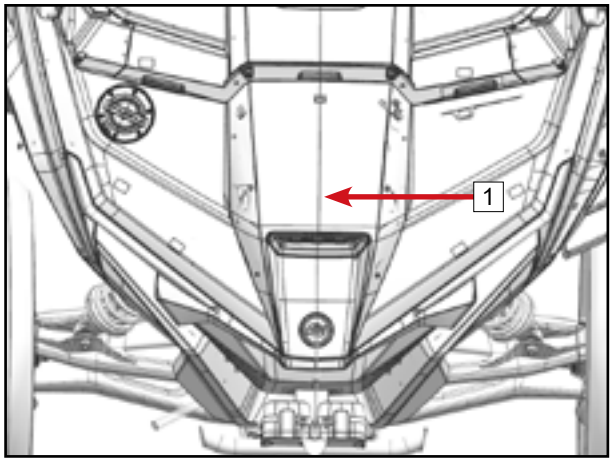

Inspection
Add brake fluid if the level is below 2 or near 2 the lower line.
Reduce brake fluid if the level is above 3 or near 3 the upper line.

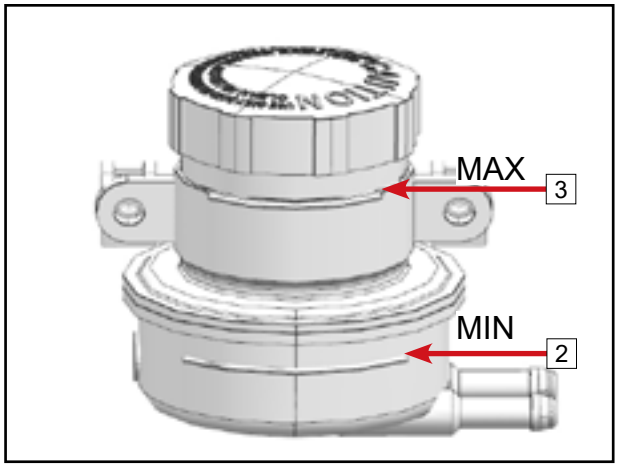

NOTE: Brake fluid will reduce in braking effect after using for a long time. Replace the brake fluid according to maintenance schedule.

© CFMOTO Powersports, Inc. This manual is subject to all applicable copyright laws. Reproduction or duplication in any form, whole or in part, is strictly prohbited.

GO TO CHAPTER INDEX

8.8 Brake Fluid Filling

When the brake fluid is below or near the lower limit line, add brake fluid until it is between the upper and lower lines.

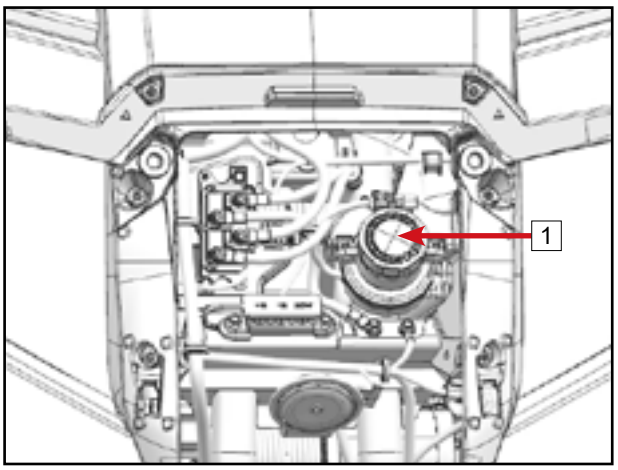

Removal

Remove the front top cover.
Remove the brake fluid reservoir cover 1.
Add brake fluid until it is between the upper and lower lines.

Use the CFMOTO recommended brake fluid for replacement.

Brake Fluid Type: DOT4

NOTE:
1. Do not allow dirt and water to mix with brake fluid when adding.
2. Use CFMOTO recommended brake fluid in case of chemical changes.
3. Contact with brake fluid may irritate the skin.
4. Do not let the brake fluid contact with painted parts. The brake fluid will corrode the paint.
5. Wipe dry immediately if brake fluid is spilled to prevent corrosion of the exterior parts.
6. Do not open the brake fluid cover for long.

Installation

Reverse the removal procedures for installation.

© CFMOTO Powersports, Inc. This manual is subject to all applicable copyright laws. Reproduction or duplication in any form, whole or in part, is strictly prohbited.

GO TO CHAPTER INDEX

8.9 Brake Fluid Replacement

Please use CFMOTO recommended brake fluid for replacement.

Brake Fluid Type: DOT4

NOTE: When bleeding brake system or replace brake fluid, start with the brake caliper which is farthest from the master cylinder.

If equipped with a bleeding device, follow the operation manual.

If not, bleed the brake system according to the following procedures:

Unplug the dust cap.

Connect a clean and transparent hose to the brake caliper bleed screw with the other side into a clean container. Make sure the hose is fastened securely on the bleed screw 1.

Have a helper press the brake pedal continuously to build pressure.

After stepping on several times, ask the helper to slowly lower the brake pedal and maintain pressure.

Loosen drain bolt, tighten it immediately and make the brake pedal return.

A: **Front brake caliper**

B: **Rear brake caliper**

NOTE: Make sure the fluid level is more than a half and under upper line in brake fluid reservoir during bleeding.

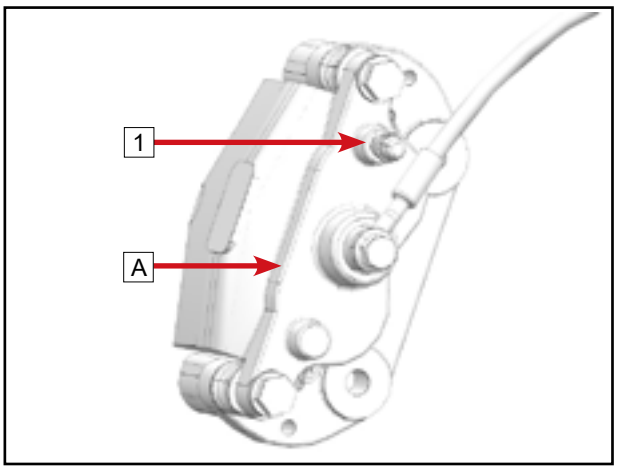

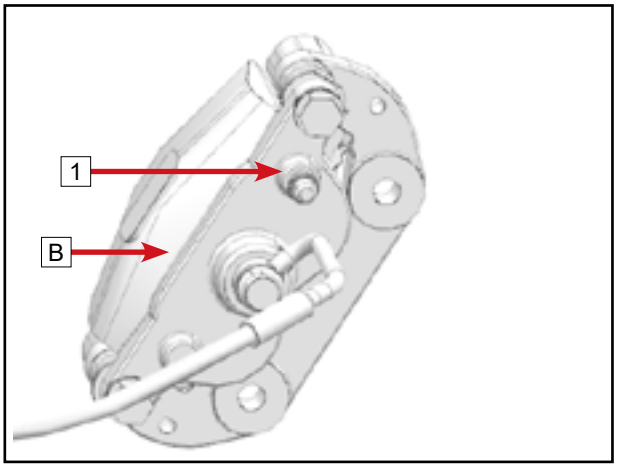

© CFMOTO Powersports, Inc. This manual is subject to all applicable copyright laws. Reproduction or duplication in any form, whole or in part, is strictly prohibited.

NOTE: Do not release brake pedal before tightening drain bolt to prevent air getting into master cylinder.

Repeat the procedure at each caliper until clean brake fluid appears in the hose and there is no air in the fluid discharged.

Tighten the bleed screw and maintain the reservoir level after each bleeding or brake fluid replacement.

Inspect brake effect after operation to make sure the brake function works and brake pedal free play is qualified.

Repeat above procedures if the brake effect is poor.

Installation

© CFMOTO Powersports, Inc. This manual is subject to all applicable copyright laws. Reproduction or duplication in any form, whole or in part, is strictly prohbited.

8.10 Brake Pedal

If the foot brake pedal feels loose or brake pedal does not return, remove it for inspection.
If foot brake pedal is in good condition, inspect pedal for damage or other defects. It is not necessary to service the brake pedal if no defect is found.

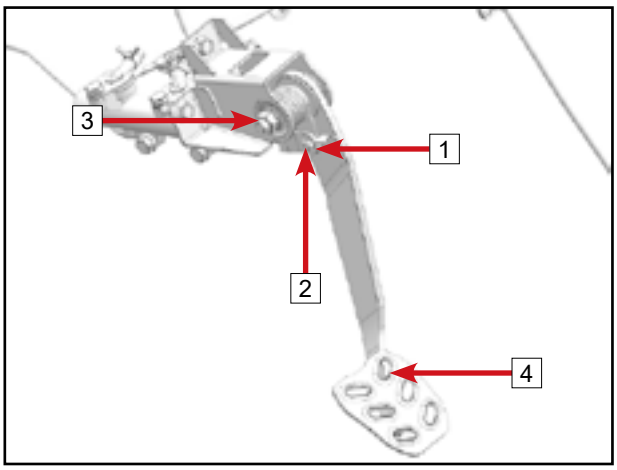

Removal

Remove cotter pin 1.
Remove pin shaft 2.
Remove brake pedal bolt 3.
Remove brake pedal assembly 4.

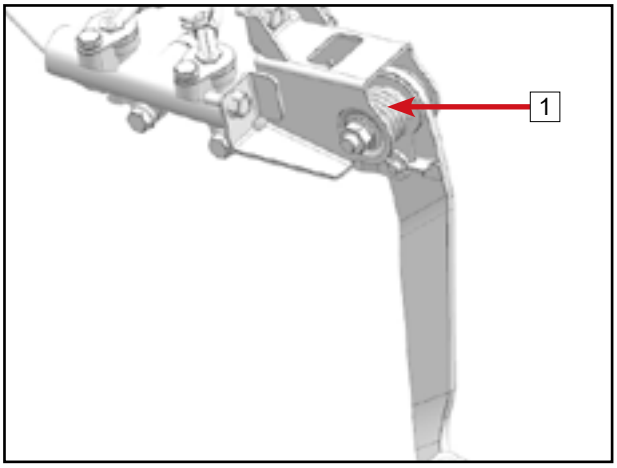

Installation

Reverse the removal procedures for installation.

Inspection

Step foot brake pedal repeatedly after installation to check its returning performance.
If it cannot return normally, check whether the foot brake return spring 1 needs to be replaced.

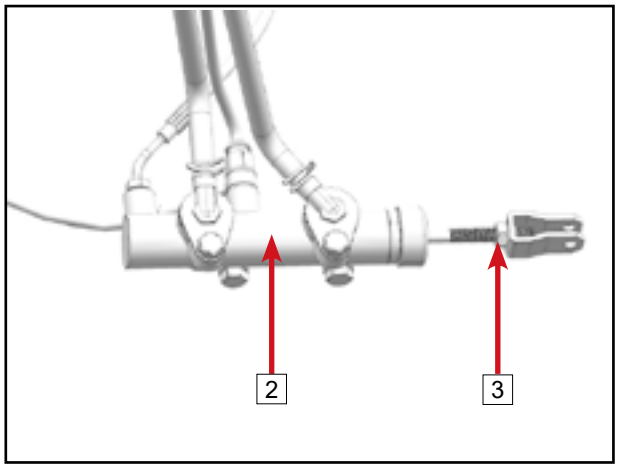

If brake performance is still not qualified after return spring replacement, check whether the fastening bolt 3 of the brake master cylinder 2 is loose, which will also cause the pedal to sink and fail to return normally.

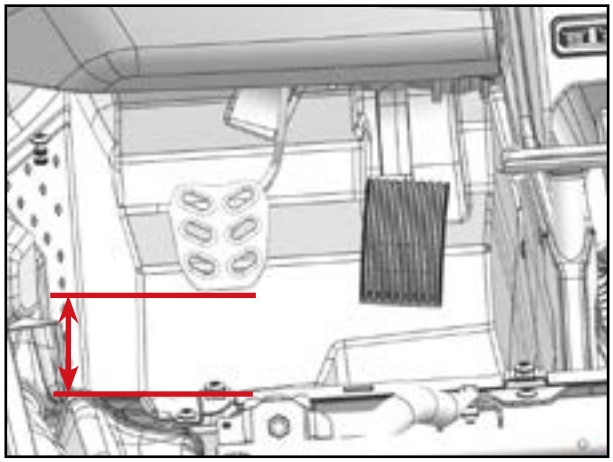

After the brake pedal is installed in place, the height must be between 130 to 135 mm.

© CFMOTO Powersports, Inc. This manual is subject to all applicable copyright laws. Reproduction or duplication in any form, whole or in part, is strictly prohbited.

GO TO CHAPTER INDEX

8.11 Parking System (Select Markets)

Removal

Unplug the parking brake harness plug [1].
Loosen the two nuts [2] on the brake caliper.

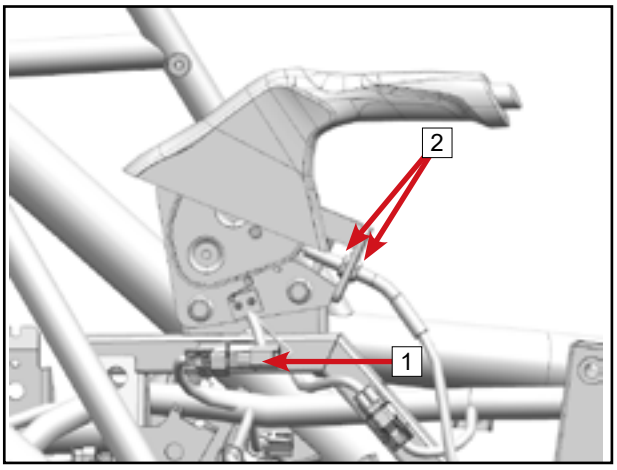

Remove cotter pin [3].
Remove pin shaft [4].
Loosen the parking cable [5].

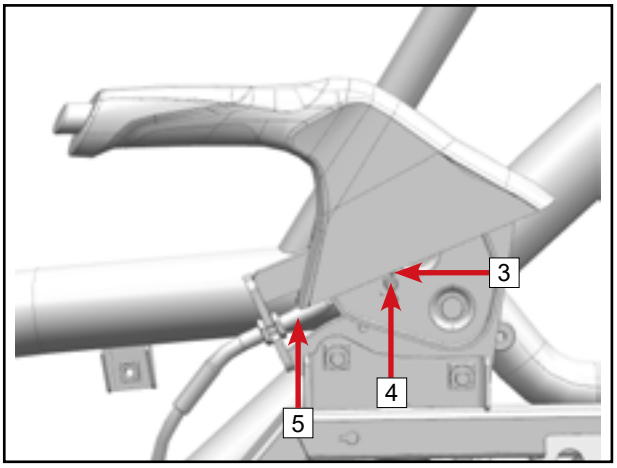

Remove bolts [6].

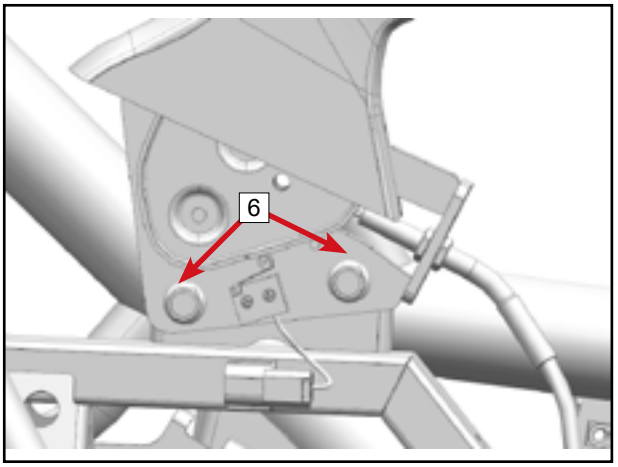

Remove the lever [7].

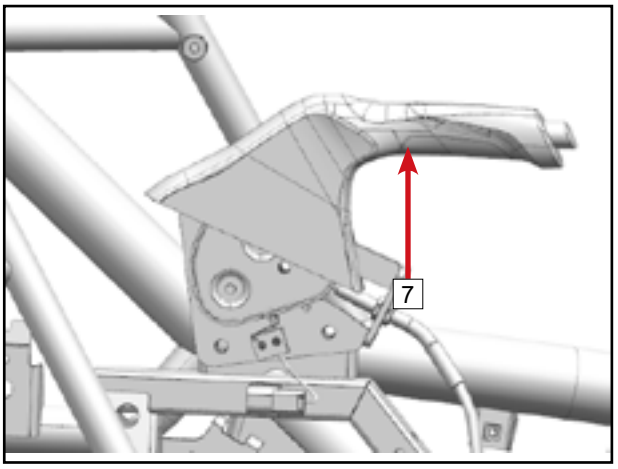

Installation

Reverse the removal procedures for installation.

© CFMOTO Powersports, Inc. This manual is subject to all applicable copyright laws. Reproduction or duplication in any form, whole or in part, is strictly prohibited.

GO TO CHAPTER INDEX

Inspection

After the parking lever and cable are installed, please check whether they have the parking brake effect.

If there is no obvious braking effect, adjust the handbrake and the nuts [1] at the brake caliper.

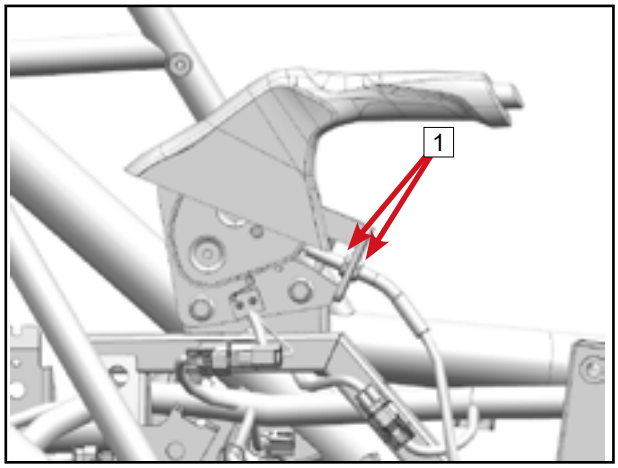

If the vehicle can still be moved while parked, please repeat the above work.

The handbrake has an automatic compensation function, so there is no need to adjust the handbrake. However, after the vehicle has been working for a long time, the brake cable can become elongated. At this time, the brake cable needs to be adjusted.

Check the performance of handbrake

When the vehicle is fully loaded and on a 18% slope, tests need to be conducted for 5 minutes, with the front of the vehicle going up or down. If the vehicle has not shifted, the parking system meets the standards. If the vehicle rolls down a slope, tighten the brake cable and adjust it to the appropriate position.

At this point, place the vehicle on a level surface again, release the handbrake. The vehicle should be able to be pushed when it is empty. If the vehicle is dragging, it indicates that the handbrake has been adjusted too tightly. Repeat the previous step to adjust it repeatedly until it is properly adjusted.

© CFMOTO Powersports, Inc. This manual is subject to all applicable copyright laws. Reproduction or duplication in any form, whole or in part, is strictly prohbited.

Blank Remarks / Notes Page

© CFMOTO Powersports, Inc. This manual is subject to all applicable copyright laws. Reproduction or duplication in any form, whole or in part, is strictly prohbited.

9.1 Front Suspension Exploded View 09-2
9.2 Rear Suspension Exploded View 09-3
9.3 Tires 09-4
9.3.1 Tire/Rim Specifications 09-5
9.3.2 Tire/Rim Inspection 09-6
9.3.3 Wheel Toe-in 09-6
9.3.3.1 Front Wheel Adjustment 09-6
9.3.3.2 Rear Wheel Adjustment 09-7
9.3.4 Bead-Lock Tire and Rim (Select Markets) 09-8
9.4 Wheel Hub 09-10
9.5 Shock Absorbers 09-11
9.5.1 Front Shock Absorber 09-11
9.5.2 Rear Shock Absorber 09-11
9.5.3 Electronic Shock Absorbers - Fox System (Select Markets) 09-13
9.5.3.1 System Overview 09-13
9.5.3.2 Shock Spring Preload and Crossover Overview 09-14
9.5.3.3 Shock Spring Components - Fox Shock System 09-15
9.5.3.4 Shock Spring Tuning - Fox Shock System 09-15
9.5.3.5 Crossover Visual Chart 09-16
9.5.3.6 Factory Spring Rates - Fox Shock System 09-16
9.5.3.7 Crossover Tuning Charts 09-17
9.6 Front Swing Arm Assembly 09-18
9.6.1 Steering Knuckle 09-18
9.6.2 Front LH/RH Upper/Lower Swing Arm 09-19
9.7 Rear Swing Arm 09-20
9.7.1 Rear LH/RH Wheel Shaft Support 09-20
9.7.2 Rear LH/RH Swing Arm Assembly 09-20
9.8 Rear Swing Arm Upper/Lower and Adjustable Tie Rod 09-21
9.9 Rear Sway Bar 09-21
9.9.1 Rear Sway Bar Ball Pin 09-21
9.10 Front Sway Bar 09-23
9.10.1 Front Sway Bar Ball Pin 09-23

© CFMOTO Powersports, Inc. This manual is subject to all applicable copyright laws. Reproduction or duplication in any form, whole or in part, is strictly prohibited.

GO TO CHAPTER INDEX

9.1 Front Suspension Exploded View

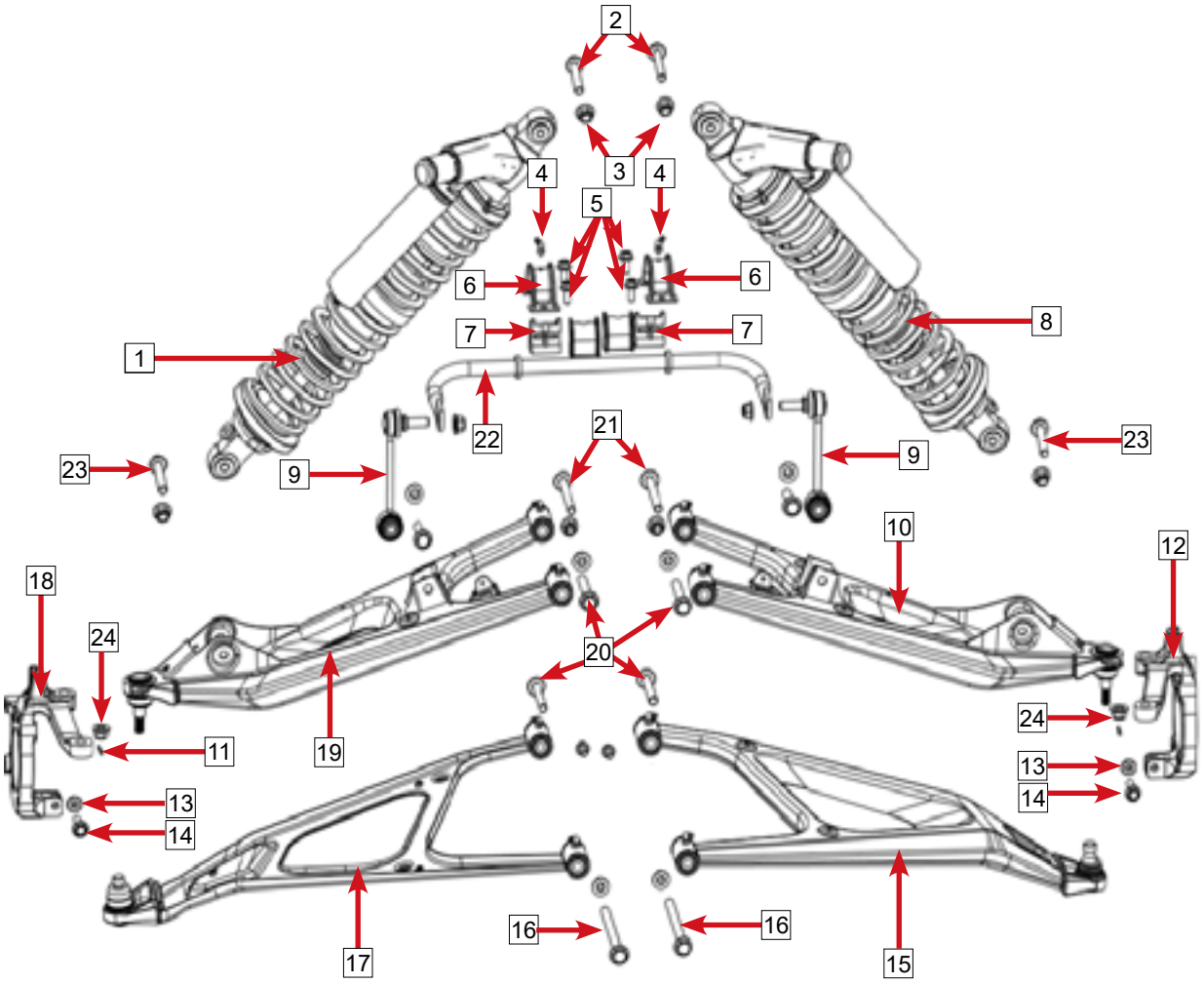

1	Front LH electronic shock absorber assembly	2	Bolts	3	Nuts	4	Reservoir
5	Bolts	6	Sway bar press cover	7	Front sway bar press support	8	Front RH electronic shock absorber assembly
9	Front sway bar ball pin	10	Front RH upper swing arm assembly	11	Cotter pin	12	RH steering knuckle
13	Nuts	14	Bolts	15	Front RH lower swing arm assembly	16	Bolts
17	Front LH lower swing arm assembly	18	LH steering knuckle	19	Front LH upper swing arm assembly	20	Bolts
21	Bolts	22	Front sway bar assembly	23	Bolts	24	Nuts

GO TO CHAPTER INDEX

© CFMOTO Powersports, Inc. This manual is subject to all applicable copyright laws. Reproduction or duplication in any form, whole or in part, is strictly prohibited.

9.2 Rear Suspension Exploded View

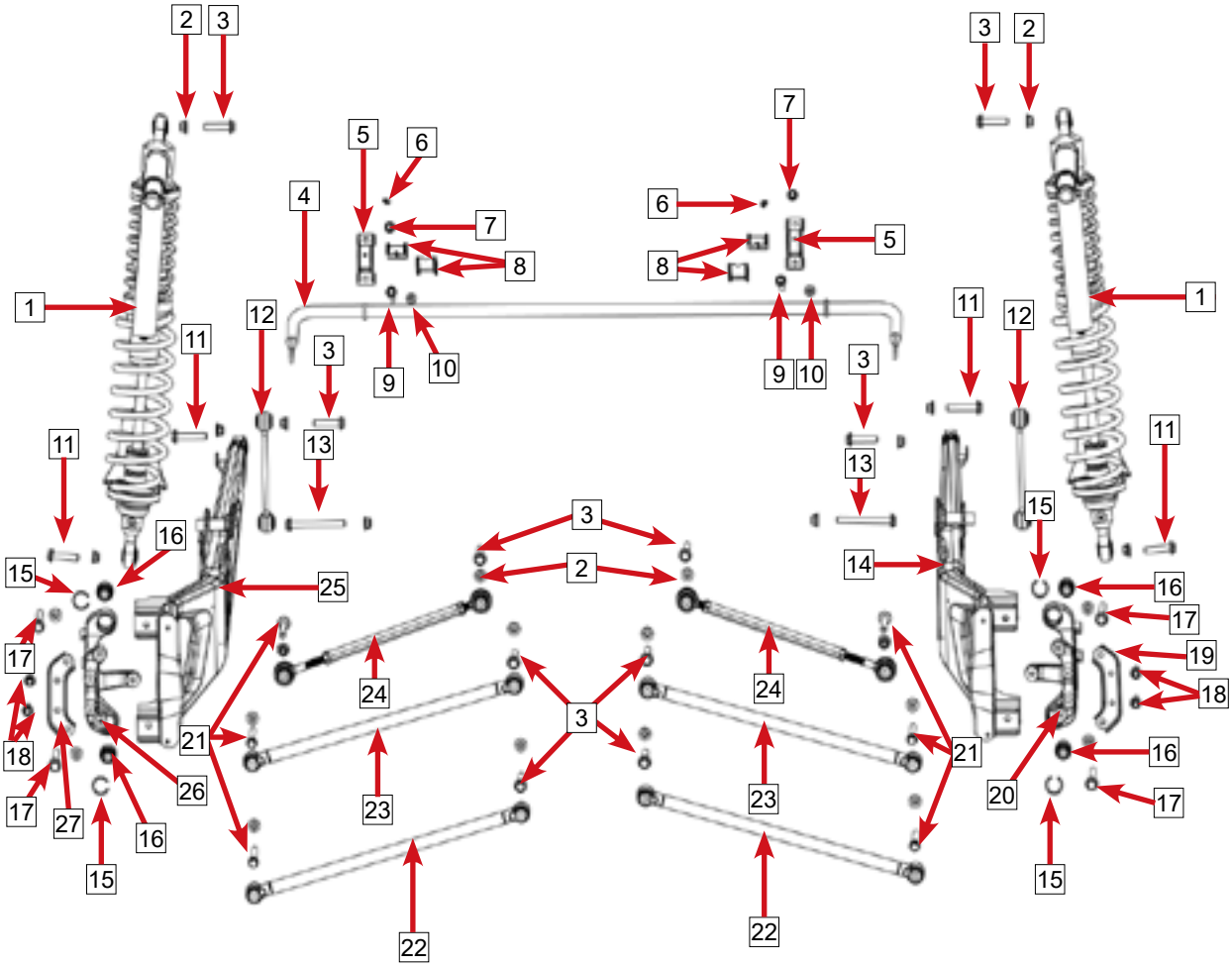

1	Rear Electronic Shock Absorber Assembly	2	Nuts	3	Bolts	4	Rear sway bar assembly
5	Sway bar press cover	6	Reservoir	7	Bolts	8	Rear sway bar support
9	Bolts	10	Nuts	11	Bolts	12	Rear sway bar ball pin
13	Bolts	14	Rear RH swing arm assembly	15	Swing arm bearing circlip	16	Rear swing arm joint bearing
17	Bolts	18	Bolts	19	Rear RH wheel shaft bracket	20	Rear RH wheel shaft support
21	Rear tie rod mounting shaft	22	Rear swing arm lower tie rod assembly	23	Rear swing arm upper tie rod assembly	24	Rear swing arm adjustable tie rod assembly
25	Rear LH swing arm assembly	26	Rear LH wheel shaft support	27	Rear LH wheel shaft bracket		

© CFMOTO Powersports, Inc. This manual is subject to all applicable copyright laws. Reproduction or duplication in any form, whole or in part, is strictly prohibited.

GO TO CHAPTER INDEX

9.3 Tires

Removal

⚠DANGER: Place the vehicle on level ground and make sure it is secured firmly. Do place any body part under the tires or vehicle in case it falls.

Using a jack and support stands, raise and support the front or rear of the vehicle with the wheel(s) to be removed off the ground.
Remove five M12 wheel nuts [1].
Remove the wheel [2].

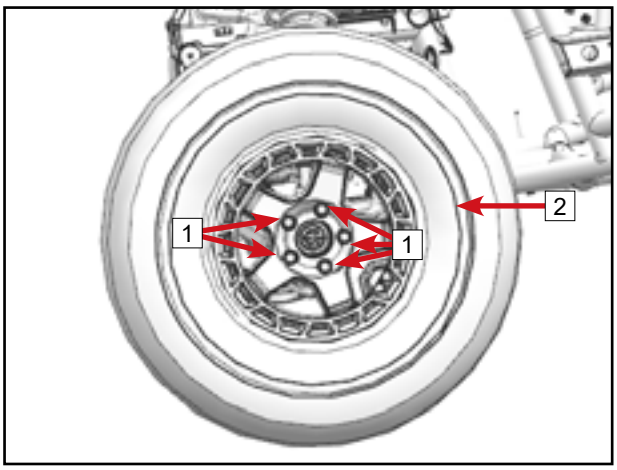

Installation

Reverse the removal procedures for installation.
Wheel Nut Torque: 110~120 N•m

Inspection

Put tire into water to see if there are bubbles. If yes, the tire is broken and needs to be replaced.
Inspect tires for cut, cracks or other damage. Replace with new tires if any defect occurs.
If stones or other foreign objects are in the tread pattern, use tools to remove them.

⚠DANGER: Check the status of the tires before driving. A burst of the tires will cause the vehicle to lose control and cause an accident. For safety, immediately replace any tires that are damaged or reach their wear limit.

⚠WARNING: Using tires and rims that are not approved or recommended by CFMOTO will affect the performance and safety of the vehicle. Use only CFMOTO tires and rims.

⚠WARNING: New tires have poor grip and are prone to accidents. Do break-in according to specified mileage.
New tires are coated with mold release agent and therefore do not have full grip. The first 300 km must be operated in a moderate manner at different angles, so that the entire tread is rubbed against the ground. Only by breaking-in will full grip be achieved.

© CFMOTO Powersports, Inc. This manual is subject to all applicable copyright laws. Reproduction or duplication in any form, whole or in part, is strictly prohbited.

GO TO CHAPTER INDEX

DANGER:
Tire tread patterns used on front and rear tires should be consistent.
Change tires immediately if they age and crack, no matter how long they are used.

Tire Removal / Installation

Secure the rim on a specialized tire mounting machine. Removal the old tire an and press the new tire onto the rim.

9.3.1 Tire/Rim Specifications

30 x 10.00 R14 - Front
30 x 10.00 R14 - Rear
Pressure:

Item			Standard Value	Service Limit
Front wheel	Rim runout	Longitude	/	0.5 mm
		Transverse	/	0.5 mm
	Tires	Remaining groove	/	3.0 mm
		Pressure (North America)	22 Psi (150 kPa)	22 Psi (150 kPa)

Item			Standard Value	Service Limit
Rear wheel	Rim runout	Longitude	/	0.5 mm
		Transverse	/	0.5 mm
	Tires	Remaining groove	/	3.0 mm
		Air pressure (North America)	22 Psi (150 kPa)	22 Psi (150 kPa) 24.6 Psi/170 kPa (Z10-4)

© CFMOTO Powersports, Inc. This manual is subject to all applicable copyright laws. Reproduction or duplication in any form, whole or in part, is strictly prohbited.

9.3.2 Tire/Rim Inspection

Lift the front of the vehicle in a horizontal position with a suitable device. Making sure the body has no force on the wheels, shake the front wheels left and right, check whether the front wheels are connected securely and whether there is looseness. If loose, check whether the swing arms, wheel shaft, rim bolts and nuts are tight. After checking, if still loose, check or replace the hub assembly, swing arm bushings or ball pins.

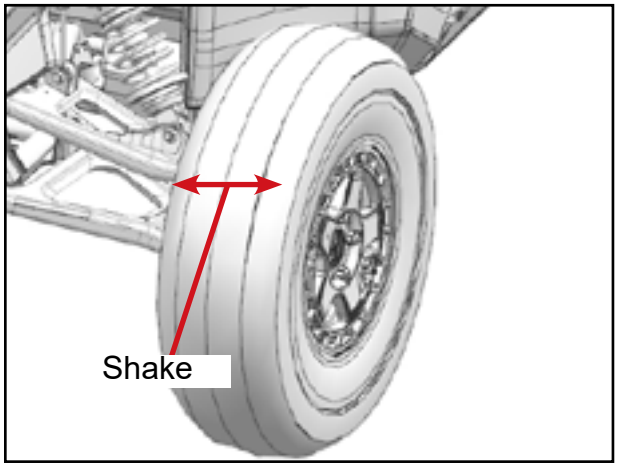

9.3.3 Wheel Toe-in

9.3.3.1 Front Wheel Adjustment

Park the vehicle in a horizontal position and measure the front wheel toe-in. Comparing to vehicle running direction, the front is A, back is B.

Toe-in: B - A = 5 - 10 mm

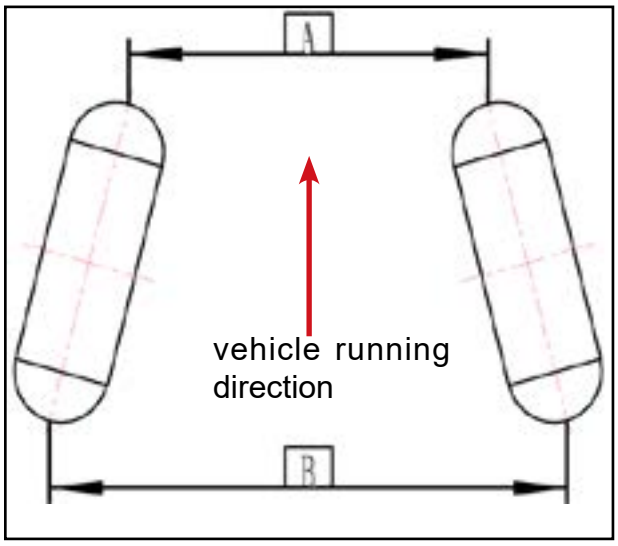

If the measurement is out of specification, adjust the lock nut 2 of steering rod 1.

Drive the vehicle slowly after the adjustment is completed. Ensure that steering works properly.

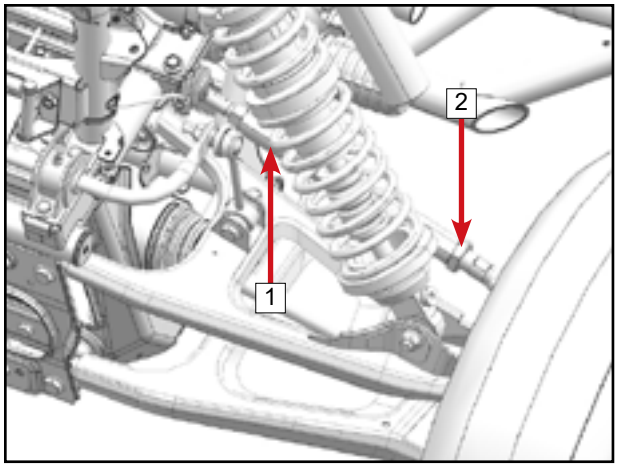

© CFMOTO Powersports, Inc. This manual is subject to all applicable copyright laws. Reproduction or duplication in any form, whole or in part, is strictly prohibited.

GO TO CHAPTER INDEX

© CFMOTO Powersports, Inc. This manual is subject to all applicable copyright laws. Reproduction or duplication in any form, whole or in part, is strictly prohbited.

9.3.3.2 Rear Wheel Adjustment

Park the vehicle on a level surface. Verify the vehicle ground clearance meets the design requirement, then measure the rear wheel toe-in at the axle centerline. Comparing to vehicle running direction, the front is B, back is A.

Rear Wheel Toe-in: A - B = 5~10 mm

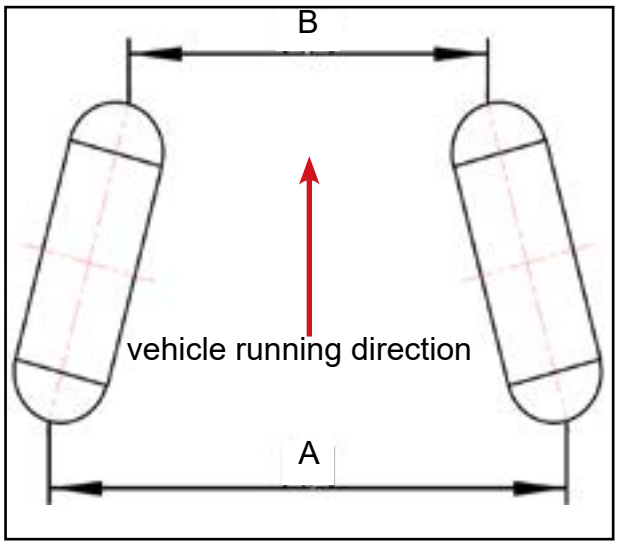

NOTE: The heights of A and B from the ground must be consistent when measuring.

To verify both wheels are aligned the same, measure the distance from the centerline of the left rear wheel to the left rear swing arm mounting point as ‘C’, and the distance from the the centerline of the right rear wheel to the right rear swing arm mounting point as ‘D’.

Rear Wheel Toe Variance: C-D = ≤2 mm

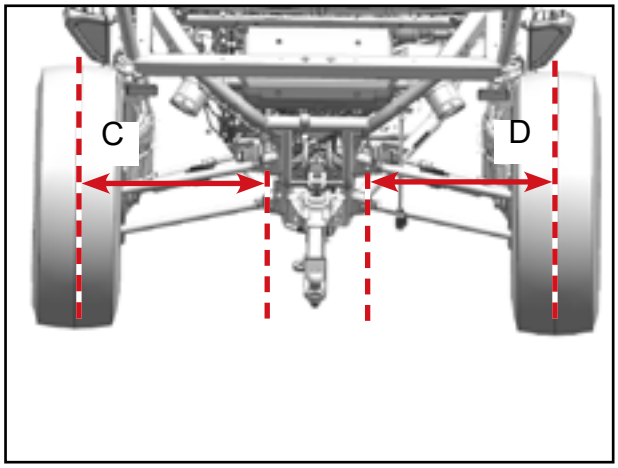

If the measurement is out of specification, adjust the lock nuts [2] and [3] of adjustable tie rod [1].

Lock nut torque: 105-115 N·m

Drive the vehicle slowly after the adjustment is completed. Ensure that the steering wheel can correctly control the vehicle direction.

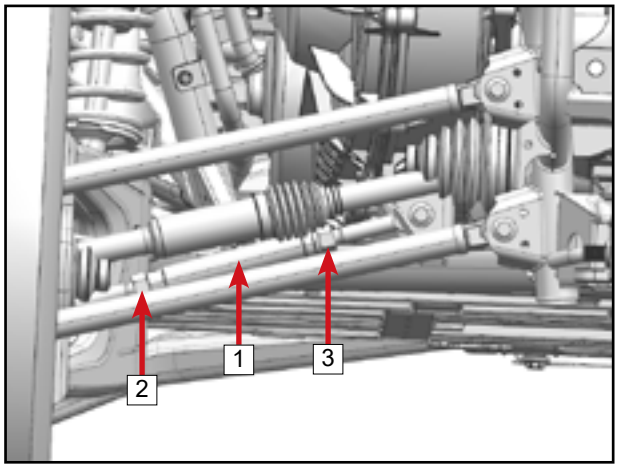

GO TO CHAPTER INDEX

9.3.4 Bead-Lock Tire and Rim (Select Markets)

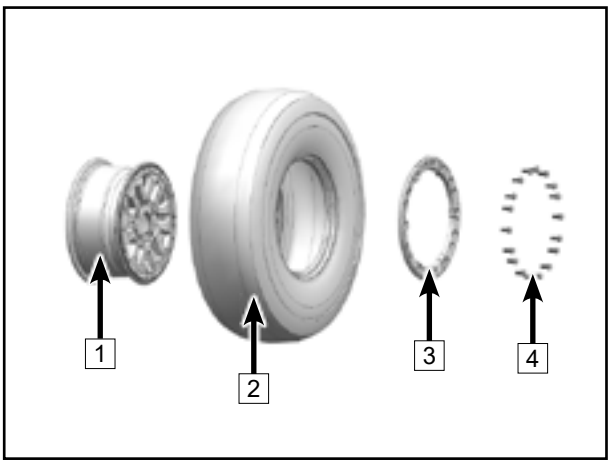

NOTE: Tire pressure significantly affects vehicle handling and stability. Insufficient tire pressure may cause the tire to deflate and rotate on the wheel. Overinflated tires, on the other hand, risk blowouts. It is essential to adhere to the recommended pressure levels. Never allow tire pressure to fall below the minimum threshold, as this could result in the tire separating from the rim.

NOTE: Check the pressure when the tires are cold. Tire pressure changes with temperature and altitude. If either of these conditions changes, recheck the pressure.

Wheel Installation:

1 - Rim

2 - Tire

3 - Locking ring

4 - Locking ring bolt
Bolt specification: M8×25

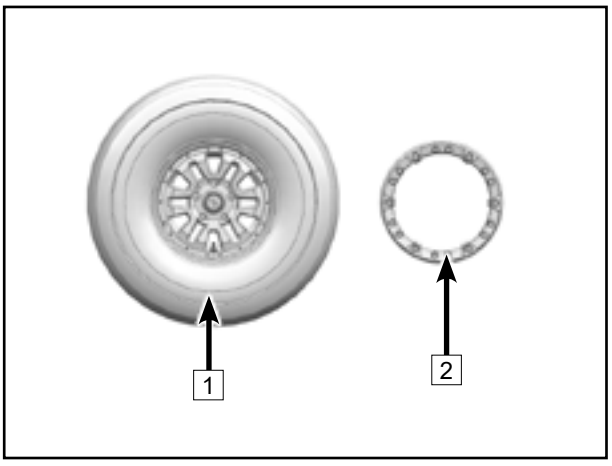

1 - Outer ring of tire

2 - Inner locking ring shoulder

Install the tire on the wheel rim.
On the side opposite the locking ring, apply tire mounting lubricant to the inner tire bead and the wheel to ensure proper tire seating during inflation.
The outer tire bead should fit snugly against the shoulder of the inner locking ring, with the locking ring centered within the tire.

© CFMOTO Powersports, Inc. This manual is subject to all applicable copyright laws. Reproduction or duplication in any form, whole or in part, is strictly prohbited.

Install the locking ring diagonally.
Install all locking ring bolts diagonally by hand to avoid cross-threading.
To ensure even load distribution on the locking ring, only pre-tighten the bolts gradually.
Locking ring bolt (initial tightening torque): approximately 3 N·m ± 1 N·m.
At this stage, check whether the tire remains centered on the wheel and reposition it if necessary.
Tighten the lock ring bolts in the same sequence according to the second tightening torque.

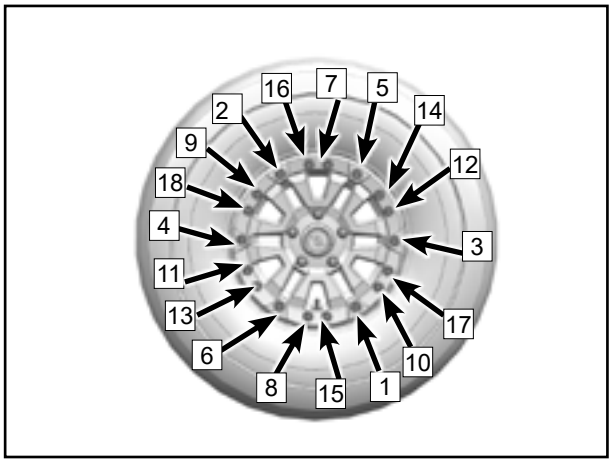

Locking ring bolts (second tightening torque): 14 N·m ± 1 N·m
The inner ring of the locking ring should contact the rim, allowing slight flexure of the ring to conform to the tire bead.

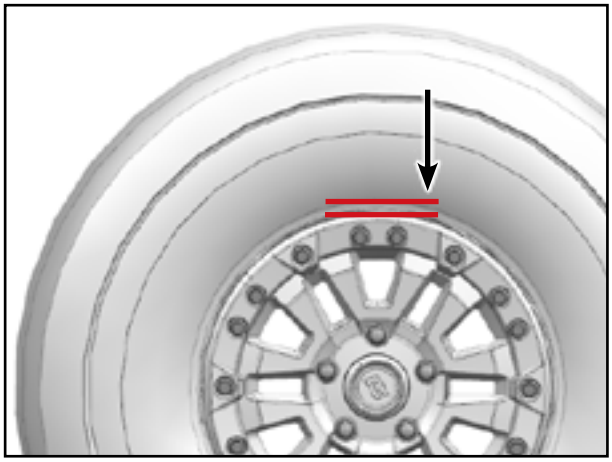

Locking ring bolts (third tightening torque): 25 N·m ± 1 N·m
The inner ring of the locking ring should contact the rim, allowing slight flexure of the ring to conform to the tire bead.

After completing assembly, check the gap between the tire and the locking ring. The clearance around the locking ring should be approximately even.
If the gap is uneven, reinstall as follows:
Loosen all bolts.
Check the position of the tire on the wheel and reposition if necessary.
Retighten the bolts in the specified sequence.
Perform the final tightening of the locking ring bolts in the described sequence.

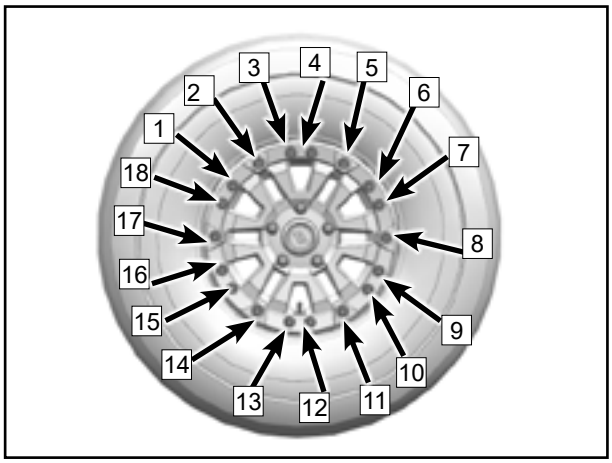

Locking ring bolts (final verification torque): 25 N·m ± 1 N·m
Tighten the locking ring bolts in a clockwise direction.
Inflate the tire to seat the inner bead onto the wheel.
Do not exceed the recommended maximum tire pressure when seating the bead.

© CFMOTO Powersports, Inc. This manual is subject to all applicable copyright laws. Reproduction or duplication in any form, whole or in part, is strictly prohbited.

9.4 Wheel Hub

Removal

Pre-work: Remove the tire (see Section 9.3)

Pre-work: Remove the brake caliper (see Chapter 8.3)

Remove cotter pin [1].

Remove hex slotted flange nut [2].

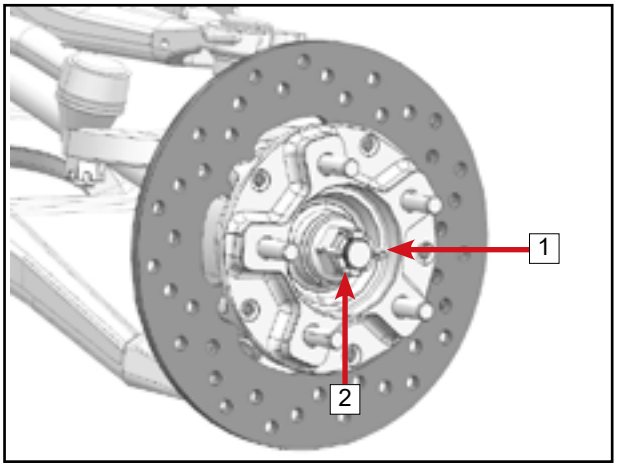

NOTE: The cotter pin must be replaced with a new one after it has been removed.

Remove the fixing bolts [3].

Remove front brake disc and wheel hub assembly [4].

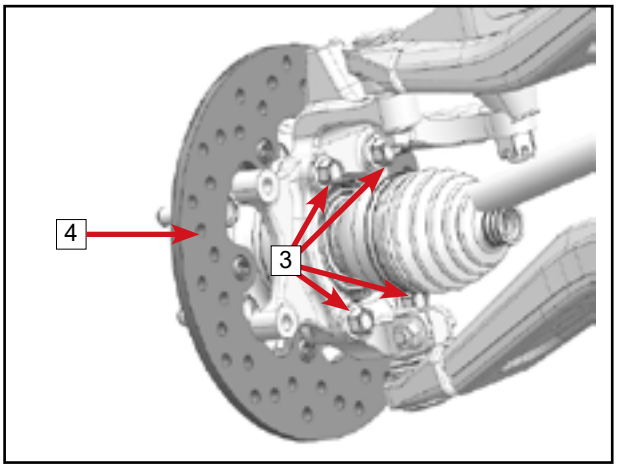

Remove the brake disc bolts [5].

Remove hub [6] from the brake disc.

The rear brake disc and wheel hub are removed in the same method as the front brake disc and wheel hub.

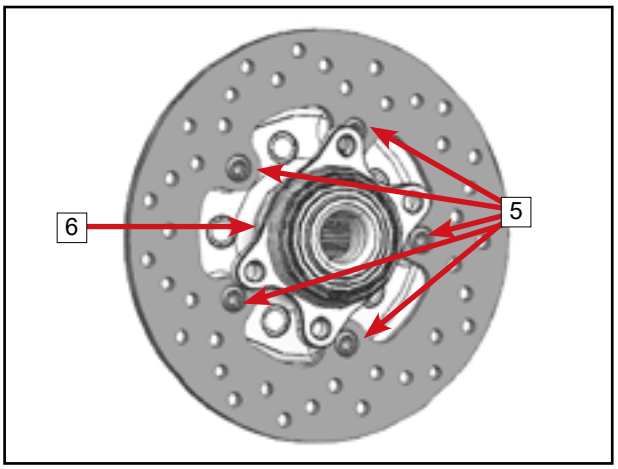

Inspection

Check the hub bearing for noise, looseness, and whether the wheel studs [7] are loose.

Replace the wheel hub if damaged.

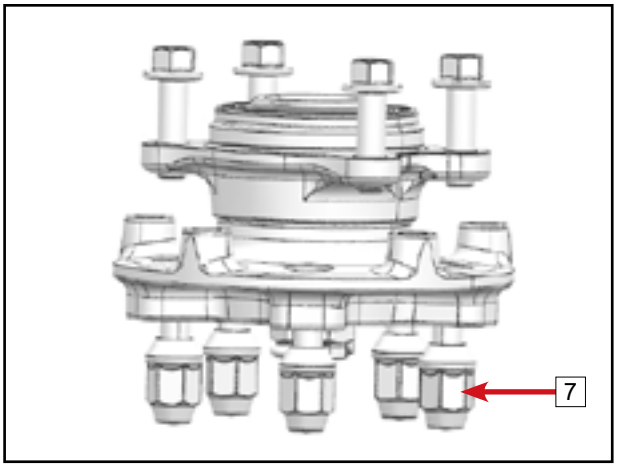

Installation

Reverse the removal procedures for installation.

Hex Slotted Flange Nut Installation Torque:

220~250 N•m

© CFMOTO Powersports, Inc. This manual is subject to all applicable copyright laws. Reproduction or duplication in any form, whole or in part, is strictly prohibited.

GO TO CHAPTER INDEX

9.5 Shock Absorbers

9.5.1 Front Shock Absorber

Removal

Pre-work: Remove the tires (see Section 9.3)
Remove the upper bolt and nut assembly [1].
Remove the lower bolt and nut assembly [2].
Remove front shock absorber [3].

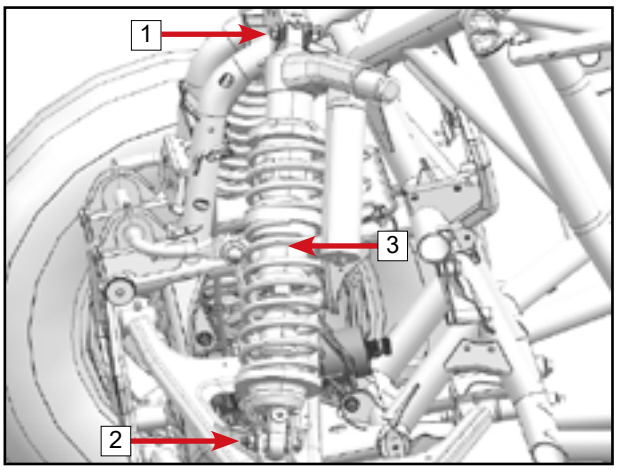

Installation

Reverse the removal procedures for installation. Refer to Chapter 02 for torque specifications.

9.5.2 Rear Shock Absorber

Removal

Pre-work: Remove the tires (see Section 9.3)
Remove the upper bolt and nut assembly [1].
Remove the lower bolt and nut assembly [2].
Remove rear shock absorber [3].

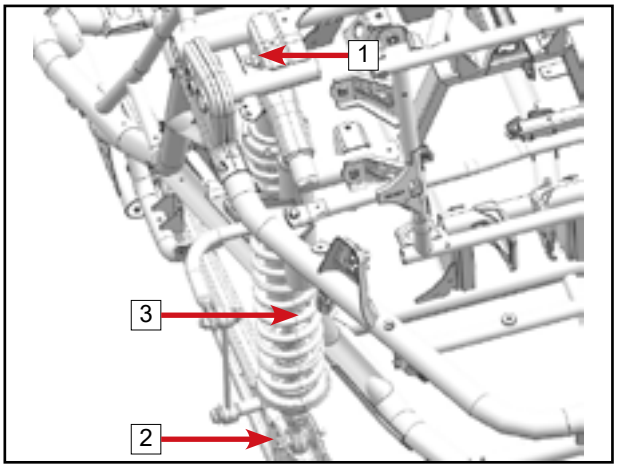

Installation

Reverse the removal procedures for installation. Refer to Chapter 02 for torque specifications.

Inspection

Clean dirt and debris from shock absorbers. Inspect shock absorber appearance for leaks, cracks, or damage. Replace if any damage is found.

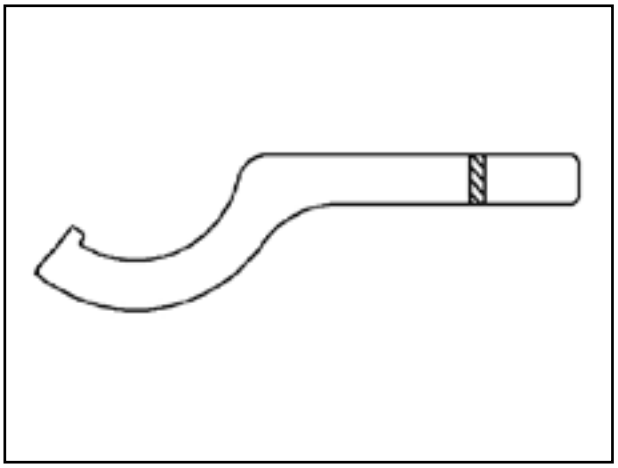

Spring Preload Adjustment

To retain ride height and ground clearance, increase spring preload any time the vehicle is loaded with heavy cargo. Adjust the preload, then adjust the preload back after the cargo is unloaded. Adjust with a shock absorber adjustment wrench.

Increase spring preload:

Loosen the lock nut (1).
Turn the adjuster (2) clockwise to shorten the spring length.
Re-tighten the lock nut (1).

Decrease spring preload:

Loosen the lock nut (1).
Turn the adjuster (2) counterclockwise to increase the spring length.
Re-tighten the lock nut (1).

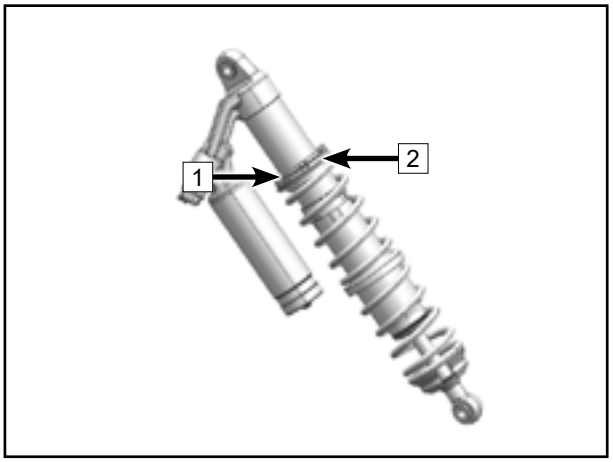

© CFMOTO Powersports, Inc. This manual is subject to all applicable copyright laws. Reproduction or duplication in any form, whole or in part, is strictly prohibited.

Front Shock Absorber (RH/LH Independent)



Rear Shock Absorber (RH/LH Symmetrical)



© CFMOTO Powersports, Inc. This manual is subject to all applicable copyright laws. Reproduction or duplication in any form, whole or in part, is strictly prohibited.

GO TO CHAPTER INDEX

9.5.3 Electronic Shock Absorbers - Fox System (Select Markets)

9.5.3.1 System Overview

Z10 and Z10-4 vehicles configured with a electronic shock aborober system contain the following components:

- 2 Front Shocks - left/right-dependent design, with electronic damping solenoid valves.
- 2 Rear Shocks - symmetrical design, with electronic damping solenoid valves.
- Suspension Control Unit (SCU) - Connected to the vehicle CAN system for alerts, controls valve damping based on user settings, and alerts to issues via fault codes.
- Wire Harness - provides electrical power to each shock solenoid valve and the SCU.
- A control switch in the vehicle allows the operator to choose between Soft-Middle-Firm suspension settings on the fly.
- Fox App (Optional-Select Markets) - The Fox App downloads onto the vehicle owner's mobile device, which uses Bluetooth communication to customize the 'Middle' suspension damping.

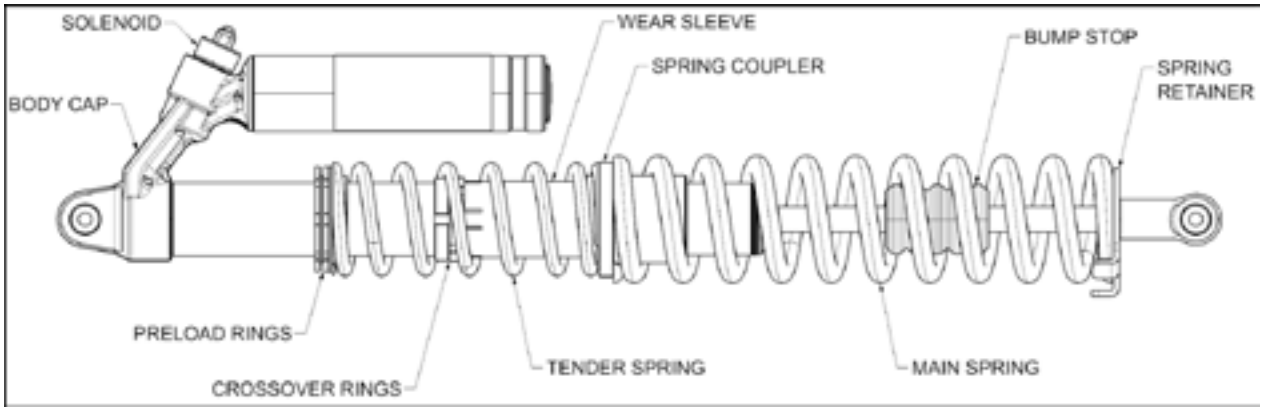

© CFMOTO Powersports, Inc. This manual is subject to all applicable copyright laws. Reproduction or duplication in any form, whole or in part, is strictly prohbited.

9.5.3.2 Shock Spring Preload and Crossover Overview

Shock settings are a personal preference which changes with rider weight, cargo, riding style, and terrain. The CFMOTO factory spring settings of the Fox shock absorber system (USA market) are well-suited to nearly all riding styles and conditions. However, for heavier vehicle loads or other rider preferences, the spring preload and crossover settings can be adjusted.

Each shock contains 2 springs for a dual-rate system with an adjustable crossover point. The dual-rate combination provides comfort over small bumps with support for big hits or heavy loads.

Tender Spring - This spring works in combination with the main spring to create the combined rate.

Main Spring - This spring contributes to the combined rate, then becomes the main rate spring when the shock is compressed beyond the crossover point

Spring Preload adjustment may be needed to restore ride height when carrying the maximum weight of people or cargo or when firmer riding is desired for rough terrain conditions. Decreasing spring preload to get smoother riding in rough or soft terrain is possible, but it also decreases ride height.

Crossover is a corresponding adjustment that sets the point in shock stroke where the softer combined rate transitions to the main spring via the Spring Coupler touching the crossover ring (Visual Chart - Page 09-16).

⚠WARNING
Adjusting suspension settings without a full understanding of the instructions in this section may create an undesirable / unpleasant riding experience or loss of control in rough terrain.

NOTE
Wrenches are included in the vehicle tool kit for adjusting shock spring preload and crossover settings. Always adjust left and right shock absorbers to the same setting.

IMPORTANT - FOX SHOCK MECHANICAL ADJUSTMENTS
Adjusting the spring preload and crossover system requires specializedl tools and experience beyond basic mechanical ability. Having an authorized dealer perform adjustments is strongly recommended.

IMPORTANT - FOX SHOCK SERVICE / REPAIR
The components in this electronic shock system require specialized tools and extensive diagnostic / repair knowledge that make it non-servicable for the average workshop. For any performance or repair issues related to this shock system, please contact an authorized service facility or specialty repair center that specializes in this type of system.

© CFMOTO Powersports, Inc. This manual is subject to all applicable copyright laws. Reproduction or duplication in any form, whole or in part, is strictly prohibited.

9.5.3.3 Shock Spring Components - Fox Shock System

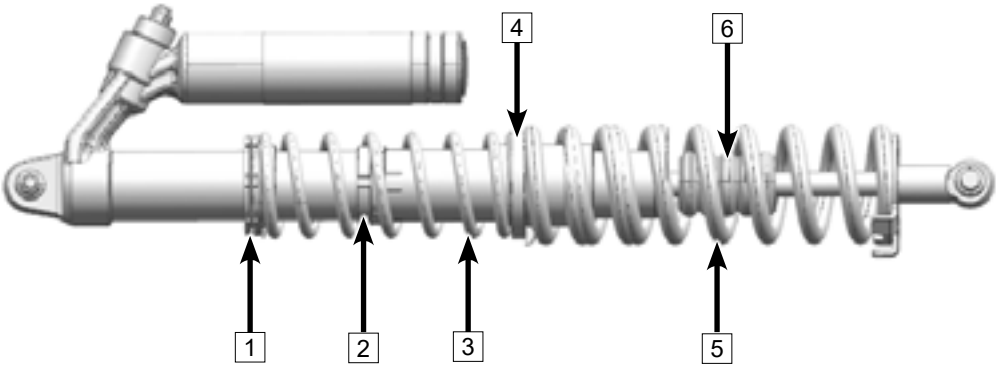

1	2	3
Preload Adjuster & Lock Ring	Crossover Adjuster & Lock Ring	Tender Spring
4	5	6
Spring Coupler	Main Spring	Bump Stop

9.5.3.4 Shock Spring Tuning - Fox Shock System

Step A - Adjusting Preload:

Adjust spring preload to meet static ride height when the vehicle is loaded and without riders.

1. Park the vehicle on a flat surface.
2. Grasp a portion of the cab frame and rock the vehicle side-to-side to set the suspension.
3. Measure the ride height (ground clearance) front and rear (Bottom of the skid plate to ground).
   Factory Specified Ride Height: 14 in. (356 mm)
4. Take pressure off the suspension by lifting and supporting the vehicle under the frame using suitable tools.
5. Make equal preload adjustments to the shocks in pairs (Front L/R and Rear L/R) by loosening the lock rings and turning the adjuster rings equally in the desired direction.
6. Lower the vehicle, then grasp a portion of the cab frame and rock the vehicle side-to-side again to reset the suspension.
7. Measure the ride height front and rear.
8. Repeat steps 3-7 until the ride height is qualified, then tighten the lock rings sufficiently.

IMPORTANT: Crossover must be adjusted accordingly with any preload change. This is required so the spring rate 'crosses over' at the same point in the shock stroke as the previous preload setting.

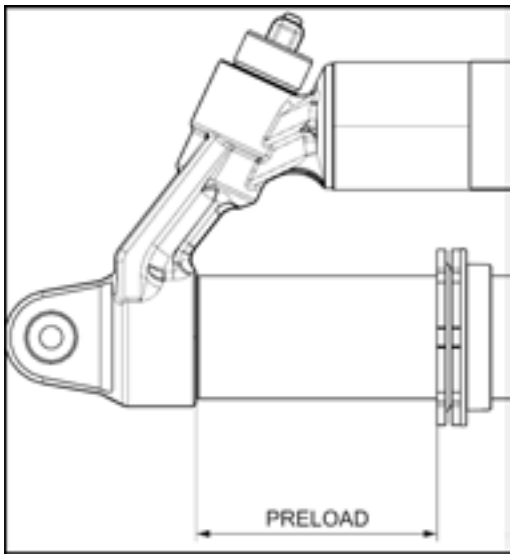

Measure preload at the points indicated

⚠WARNING
Do not exceed the factory specified ride height (ground clearance).

© CFMOTO Powersports, Inc. This manual is subject to all applicable copyright laws. Reproduction or duplication in any form, whole or in part, is strictly prohibited.

Step B - Adjusting Crossover:

After preload is set, the crossover point of each shock is set to a corresponding value following the tables on page 09-17

Crossover is a point in the shock stroke where the combined tender/main spring transitions solely to the stiffer main spring via the spring coupler. Crossover is typically expressed as a percentage of shock stroke. For example, “60% Crossover” means the shock will transition onto the main spring at 60% of the shock travel.

Tips:

- Moving the crossover ring *down* (larger crossover value, smaller percentage) will cause the springs to transition from the soft combined rate to the stiffer main rate earlier within the shock travel. This will result in a harsher ride but with improved bottom-out resistance.
- Moving the crossover ring *up* (smaller crossover value, larger percentage) will allow more shock travel on the softer combined rate for a plusher ride over smaller bumps before transition.

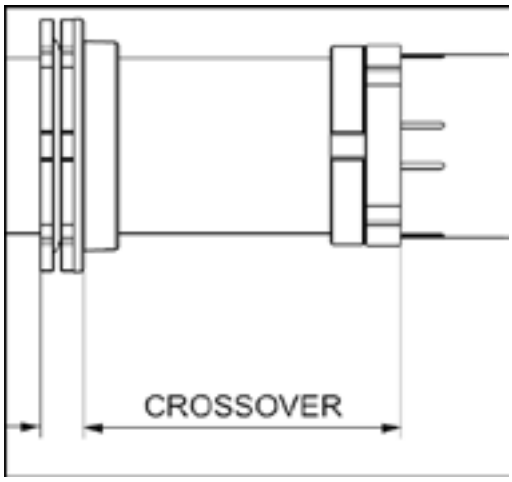

Measure crossover at the points indicated

9.5.3.5 Crossover Visual Chart

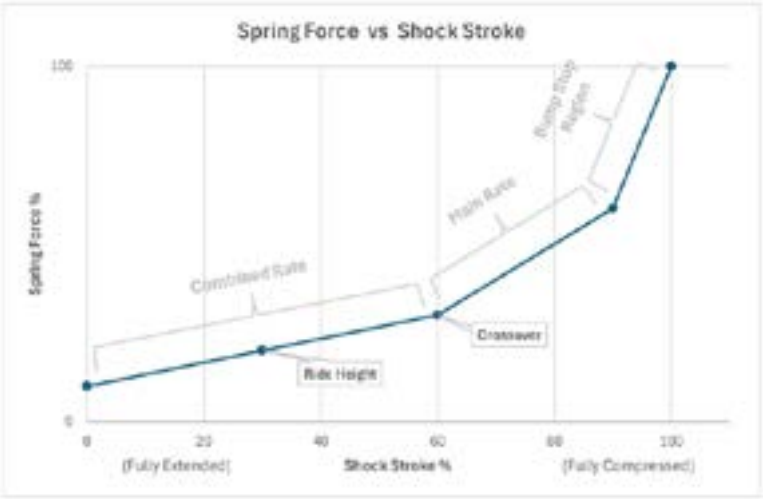

9.5.3.6 Factory Spring Rates - Fox Shock System

For enthusiasts who desire suspension performance beyond factory specifications, the CFMOTO factory spring rates are supplied below:

Factory	FRONT SHOCK ABSORBER		REAR SHOCK ABSORBER	
Spring Rates	Tender Spring	Main Spring	Tender Spring	Main Spring
Z10	200 ft-lbf	250 ft-lbf	250 ft-lbf	250 ft-lbf
Z10-4	250 ft-lbf	250 ft-lbf	250 ft-lbf	300 ft-lbf

Contact an authorized service center for more information regarding Fox system shocks and springs.

© CFMOTO Powersports, Inc. This manual is subject to all applicable copyright laws. Reproduction or duplication in any form, whole or in part, is strictly prohibited.

9.5.3.7 Crossover Tuning Charts

Crossover Tuning Chart - Z10

Z10: Front

All measurements are in Inches

Preload	Crossover % 50	55	60	65	70
-0.5	2.45	3.50	3.25	3.00	2.75	2.50
Factory Setting	2.95	3.22	2.97	2.70	2.47	2.23
+0.5	3.45		2.69	2.44	2.20	
+1.0	3.95			2.17		
MAX +1.3	4.25			2.00		

Stiffer, More Bottom Resistance — Factory Setting — More Plush, Less Bottom Resistance

Z10: Rear

All measurements are in Inches

Preload	Crossover % 60	65	70	75	80
-0.5	4.41	5.36	5.07	4.78	4.49	4.20
Factory Setting	4.91	5.11	4.82	4.50	4.24	3.95
+0.5	5.41	4.86	4.57	4.28	3.99	3.70
+1.0	5.91	4.61	4.32	4.03	3.74	3.45
MAX +3.0	7.91	3.61	3.32	3.02		

Stiffer, More Bottom Resistance — Factory Setting — More Plush, Less Bottom Resistance

Crossover Tuning Chart - Z10-4

Z10-4: Front

All measurements are in Inches

Preload	Crossover % 65	70	75	80	85
-0.5	2.75	3.07	2.85	2.63	2.41	
Factory Setting	3.25	2.82	2.60	2.40		
MAX +0.4	3.65	2.62	2.40	2.18		

Stiffer, More Bottom Resistance — Factory Setting — More Plush, Less Bottom Resistance

Z10-4: Rear

All measurements are in Inches

Preload	Crossover % 65	70	75	80	85
-0.5	5.00	4.34	4.03	3.71	3.39	
Factory Setting	5.50	4.07	3.75	3.50	3.12	
+0.5	6.00	3.80	3.48	3.16		
MAX +0.9	6.40	3.58	3.26	2.95		

Stiffer, More Bottom Resistance — Factory Setting — More Plush, Less Bottom Resistance

© CFMOTO Powersports, Inc. This manual is subject to all applicable copyright laws. Reproduction or duplication in any form, whole or in part, is strictly prohbited.

GO TO CHAPTER INDEX

9.6 Front Swing Arm Assembly

9.6.1 Steering Knuckle

Removal

Remove cotter pin [1].
Remove the nut [2].
Nut torque:
70~90 N•m

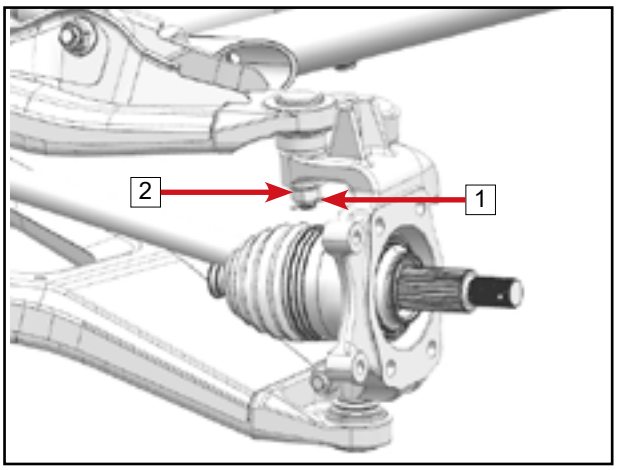

Remove cotter pin [3].
Remove the slotted nut [4].
Remove the steering rod [5].
Nut torque:
40~50 N•m

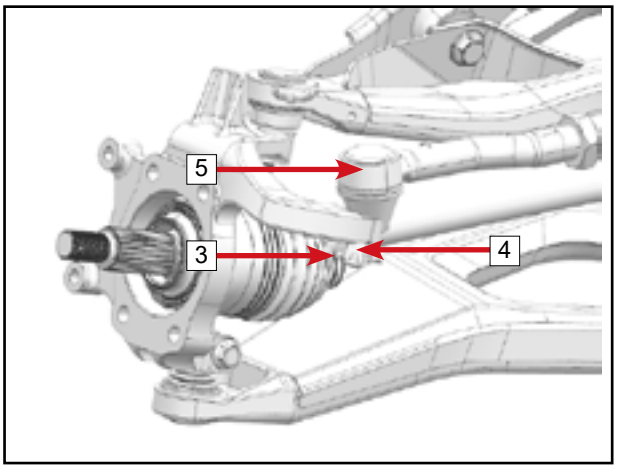

Remove the bolt and nut assembly [6].

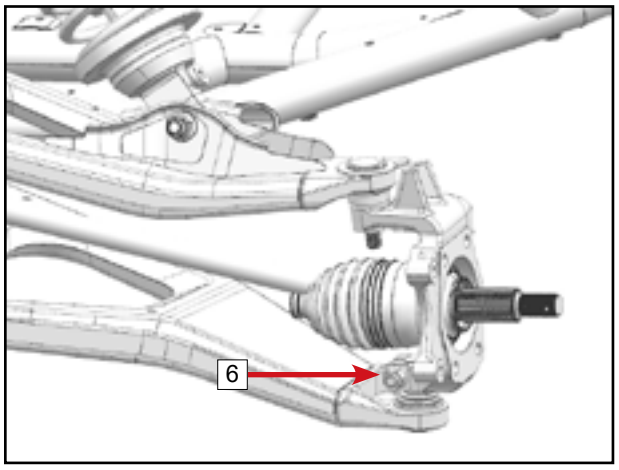

Loosen the upper swing arm [7].
Loosen the lower swing arm [8].
Remove the steering knuckle [9].

Installation

Reverse the removal procedures for installation.

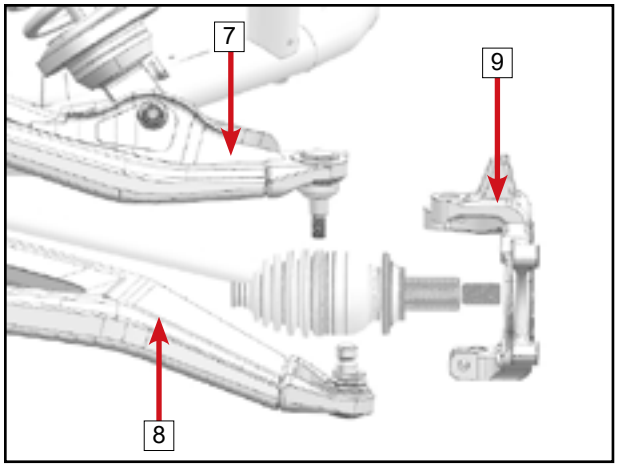

© CFMOTO Powersports, Inc. This manual is subject to all applicable copyright laws. Reproduction or duplication in any form, whole or in part, is strictly prohibited.

GO TO CHAPTER INDEX

9.6.2 Front LH/RH Upper/Lower Swing Arm

Removal

Remove nut 1.

Remove the upper swing arm fixing bolts 2.

Remove the front LH upper swing arm 3.

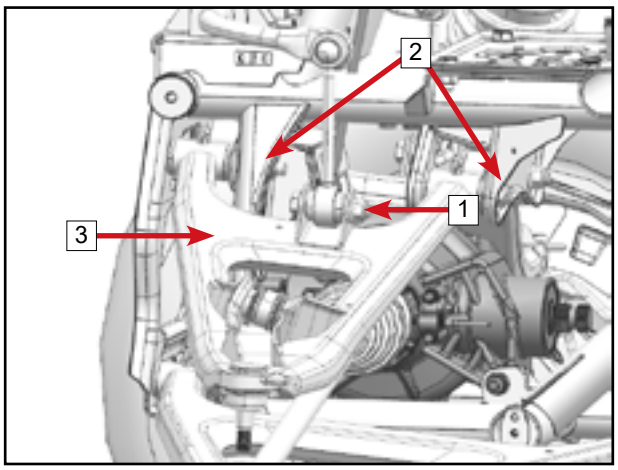

Remove lower swing arm fixing bolts 4.

Remove the front LH lower swing arm 5.

The front RH swing arm is removed the same way as the front LH swing arm.

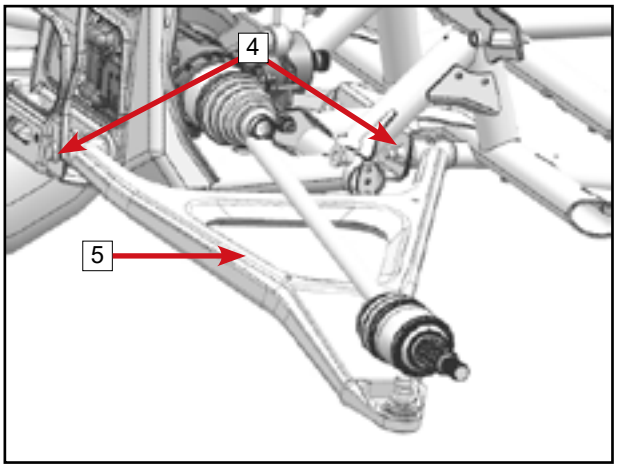

Check the sealing guard 6 of the ball pin.

If there are cracks, replace.

Ball pin removal tool can be used.

Installation

Reverse the removal procedures for installation.

Inspection

Inspect swing arm for cracks or damage. Replace if any is found.

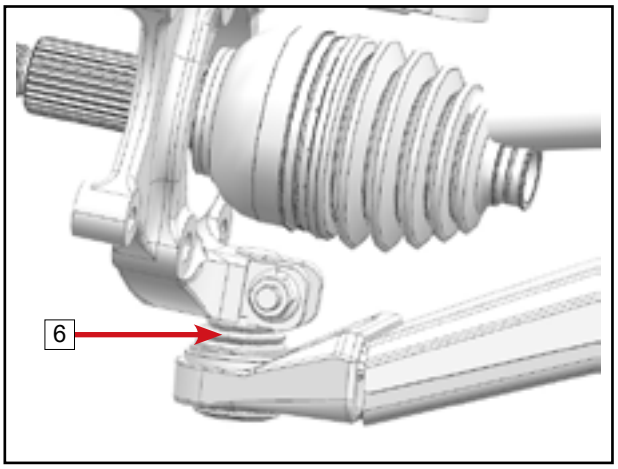

Inspect swing arm for smooth movement. Add grease to nozzle if stuck or block ed (refer to Maintenance Schedule).

Inspect whether the swing arm is stable. If wobbly, replace the bushing and liner assembly 1. If after these replacings the problem still exists, replace the corresponding swing arm.

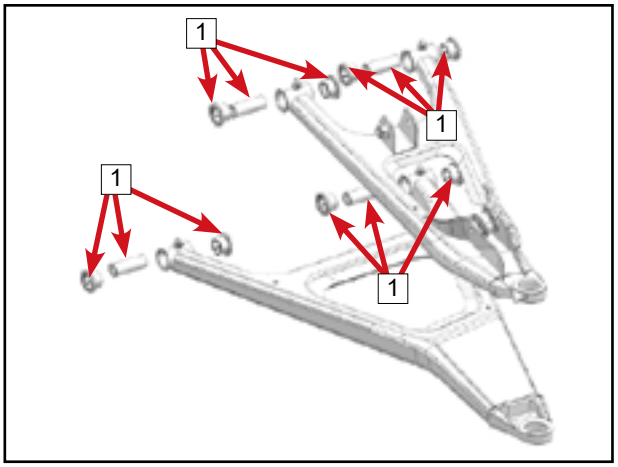

Inspect steering knuckle for water, dirt, rust or damage. Replace if any is found.

© CFMOTO Powersports, Inc. This manual is subject to all applicable copyright laws. Reproduction or duplication in any form, whole or in part, is strictly prohbited.

9.7 Rear Swing Arm

9.7.1 Rear LH/RH Wheel Shaft Support

Removal

Remove the bolt and nut assembly 1.
Remove rear LH wheel shaft holder, rear LH wheel shaft holder mounting plate and mudguard assembly 2.

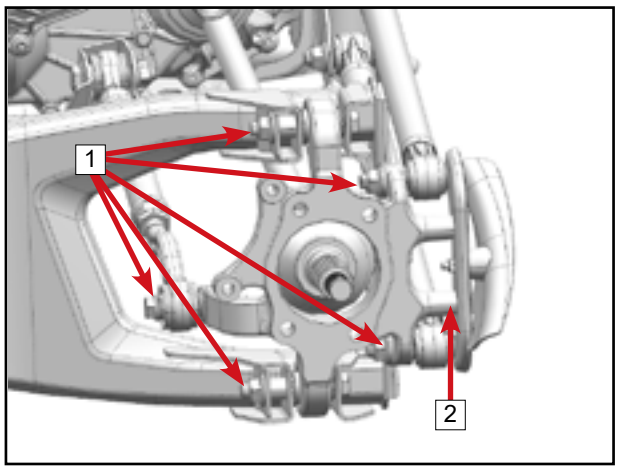

Remove the bolts 3.
Remove mudguard 4.

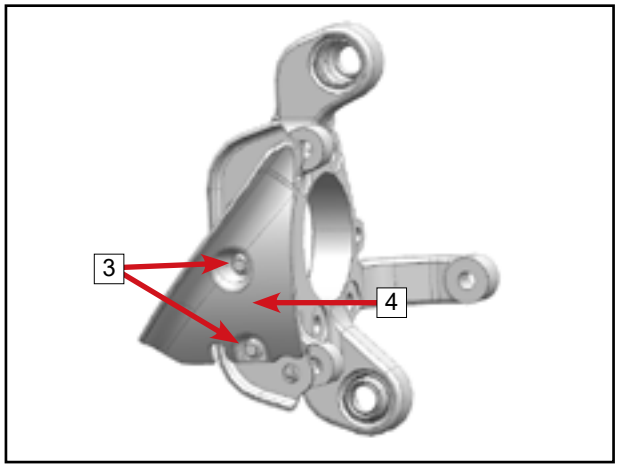

Remove the bolts 5.
Remove rear LH wheel shaft holder mounting plate 6.
Remove rear LH wheel shaft holder 7.

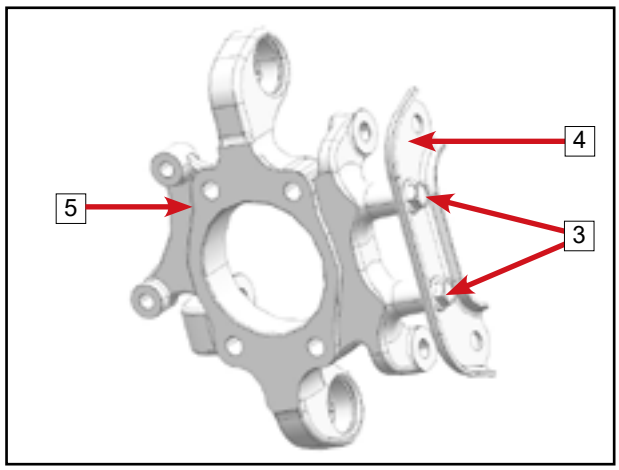

Installation

Reverse the removal procedures for installation. Refer to Chapter 02 for torque specifications.

9.7.2 Rear LH/RH Swing Arm Assembly

Removal

Remove the bolt and nut assembly 1.
Remove the bolts 2 .
Remove the rear LH swing arm assembly.

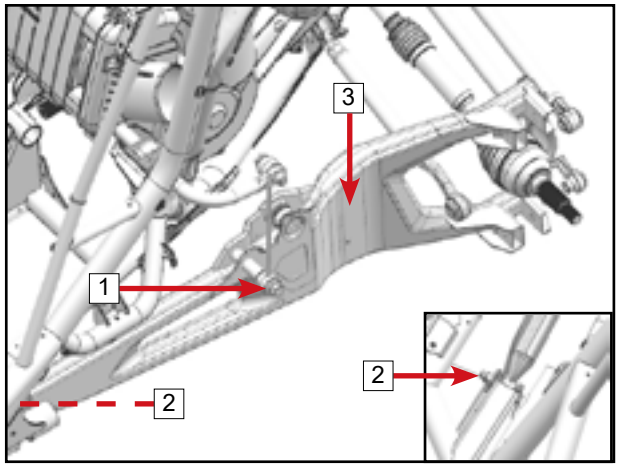

Inspection

Check the swing arm for cracks or damage, replace if any.

Inspect swing arm for smooth movement. Add grease to the nozzle if stuck or blocked (refer to Maintenance Schedule).

© CFMOTO Powersports, Inc. This manual is subject to all applicable copyright laws. Reproduction or duplication in any form, whole or in part, is strictly prohibited.

GO TO CHAPTER INDEX

Check whether the swing arm is stable, if wobbly or the bushing is aged and cracked. Replace the bushing 1.

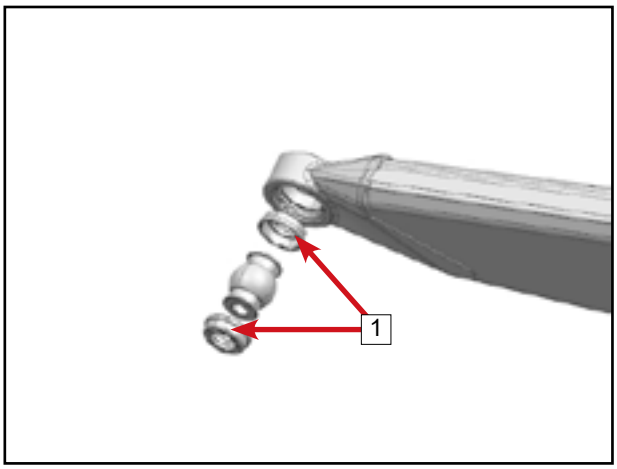

Installation
Reverse the removal procedures for installation.

9.8 Rear Swing Arm Upper/Lower and Adjustable Tie Rod

Removal
Remove the fixing bolts 1.
Remove rear swing arm upper tie rod 2 and lower tie rod 3.
Remove the fixing bolt 4.
Remove the adjustable tie rod assembly 5.
.

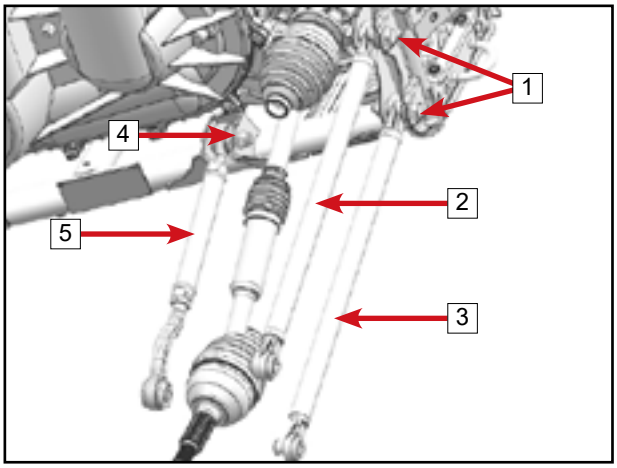

Installation
Reverse the removal procedures for installation. Refer to Chapter 02 for torque specifications.

9.9 Rear Sway Bar

Removal
Remove the LH two nuts 1.
Remove the RH two nuts in the same way.
Remove the rear sway bar press cover 2.
Remove rear sway bar support 3.
Remove rear sway bar assembly 4.

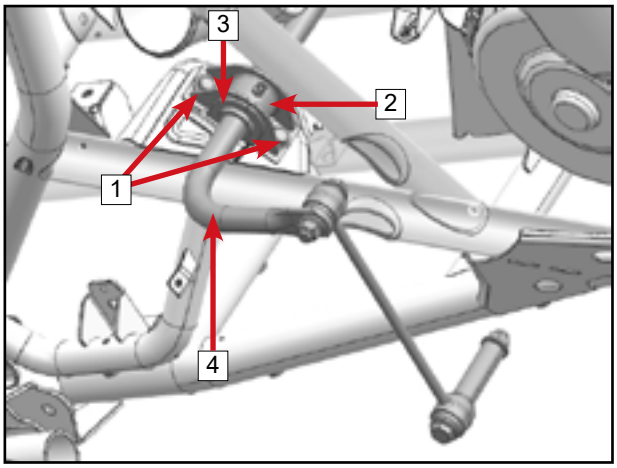

9.9.1 Rear Sway Bar Ball Pin

Removal
Remove the bolts 1.
Remove rear sway bar ball pins 2.

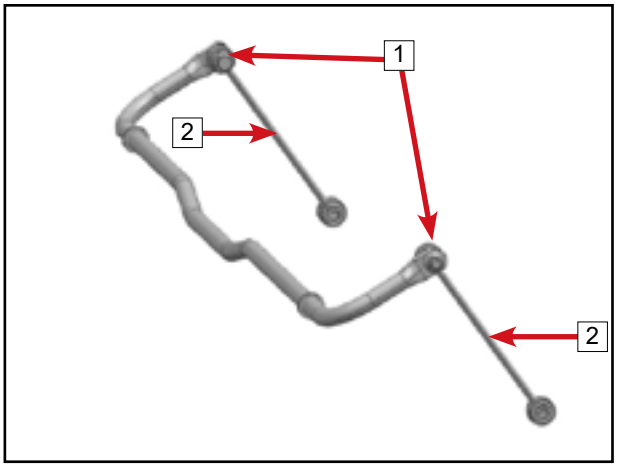

Installation
Reverse the removal procedures for installation.

© CFMOTO Powersports, Inc. This manual is subject to all applicable copyright laws. Reproduction or duplication in any form, whole or in part, is strictly prohibited.

Inspection

Check whether each connecting rod has cracks or rust and corrosion, replace if any.

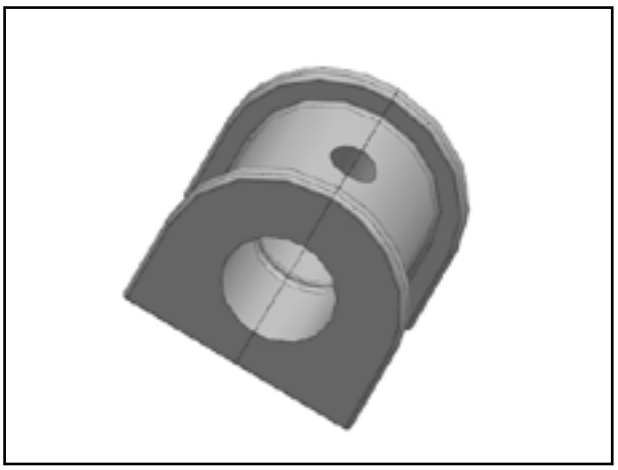

Check the sway bar support. If broken and cracked, replace the support.
Check the sway bar support lubrication, add grease if there is insufficient lubrication.

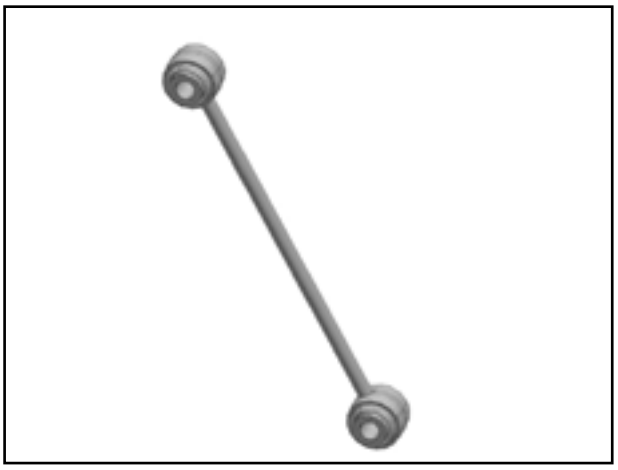

Check whether the ball head swings smoothly in the ball pin assembly.
Check the dust cover in the ball pin assembly for cracks and replace if damaged.

Installation

Add grease to the nozzle 1 (refer to Maintenance Schedule).
Reverse the removal procedures for installation.

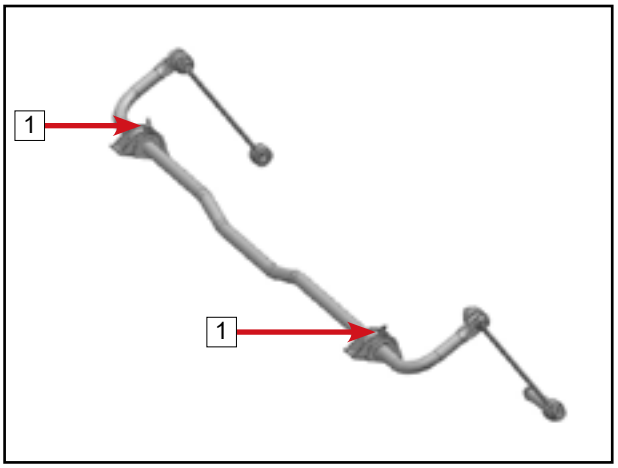

© CFMOTO Powersports, Inc. This manual is subject to all applicable copyright laws. Reproduction or duplication in any form, whole or in part, is strictly prohibited.

9.10 Front Sway Bar

Removal

Remove the fixing bolts 1.
Remove the lower fixing bolt of the ball pin 2.
Remove the rear sway bar press cover 3.
Remove rear sway bar support 4.
Remove rear sway bar assembly 5.

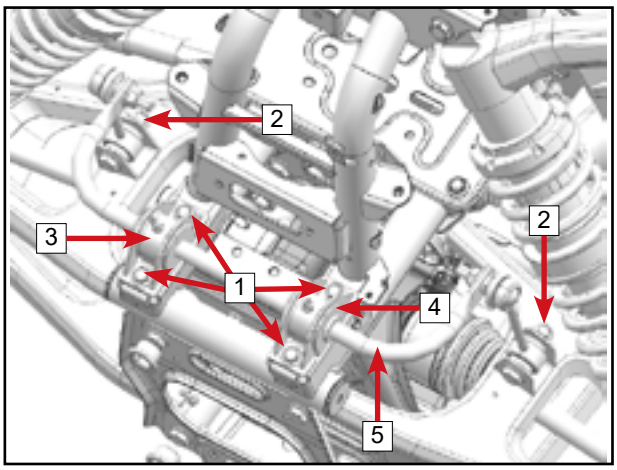

9.10.1 Front Sway Bar Ball Pin

Removal

Remove the bolts 1.
Remove front sway bar ball pin 2.

Installation

Reverse the removal procedures for installation.

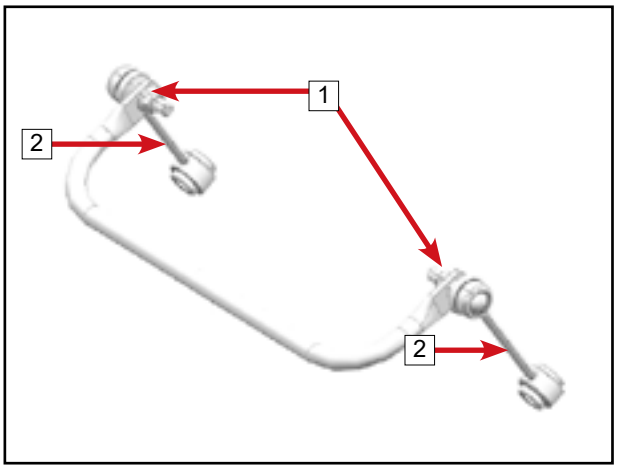

Inspection

Check whether each connecting rod has cracks or rust and corrosion, replace if any.

Check the sway bar support. If broken and cracked, replace the support.
Check the sway bar support lubrication, add grease if there is insufficient lubrication.

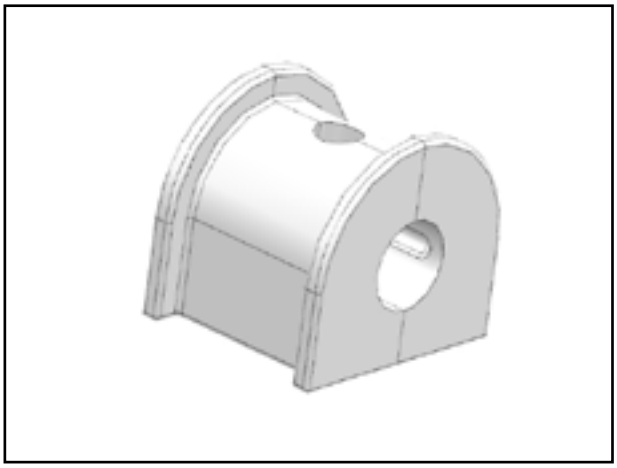

Check whether the ball head swings smoothly in the ball pin assembly.
Check the dust cover in the ball pin assembly for cracks and replace if damaged.



© CFMOTO Powersports, Inc. This manual is subject to all applicable copyright laws. Reproduction or duplication in any form, whole or in part, is strictly prohibited.

Installation

Add grease to the nozzle 1 (refer to Maintenance Schedule).

Reverse the removal procedures for installation.

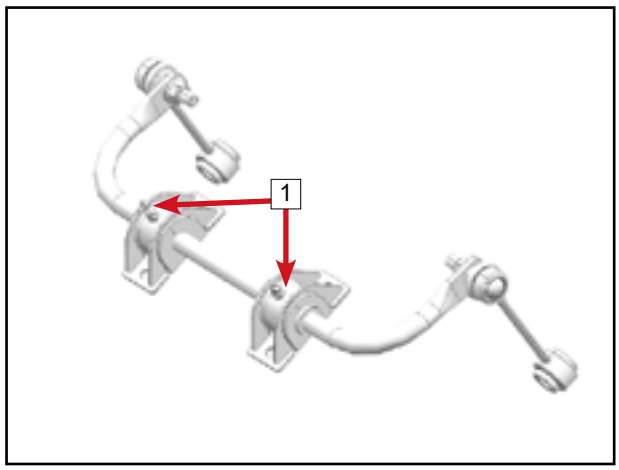

© CFMOTO Powersports, Inc. This manual is subject to all applicable copyright laws. Reproduction or duplication in any form, whole or in part, is strictly prohbited.

10.1 Steering System Exploded View 10-2
10.2 Steering Column and Steering Wheel Inspection 10-3
10.3 Steering Wheel Height Adjustment 10-3
10.4 Steering Wheel Initial Center Adjustment 10-4
10.5 Steering Wheel & Steering System 10-5
10.5.1 Steering Wheel 10-5
10.5.2 Gas Spring Assembly 10-6
10.5.3 Upper Steering Universal Joint 10-6
10.5.4 Lower Steering Universal Joint 10-7
10.5.5 Steering Tie Rod 10-7
10.6 EPS 10-8
10.7 Shift Lever Inspection 10-14
10.8 Shift Cable Adjustment 10-14

© CFMOTO Powersports, Inc. This manual is subject to all applicable copyright laws. Reproduction or duplication in any form, whole or in part, is strictly prohbited.

10.1 Steering System Exploded View

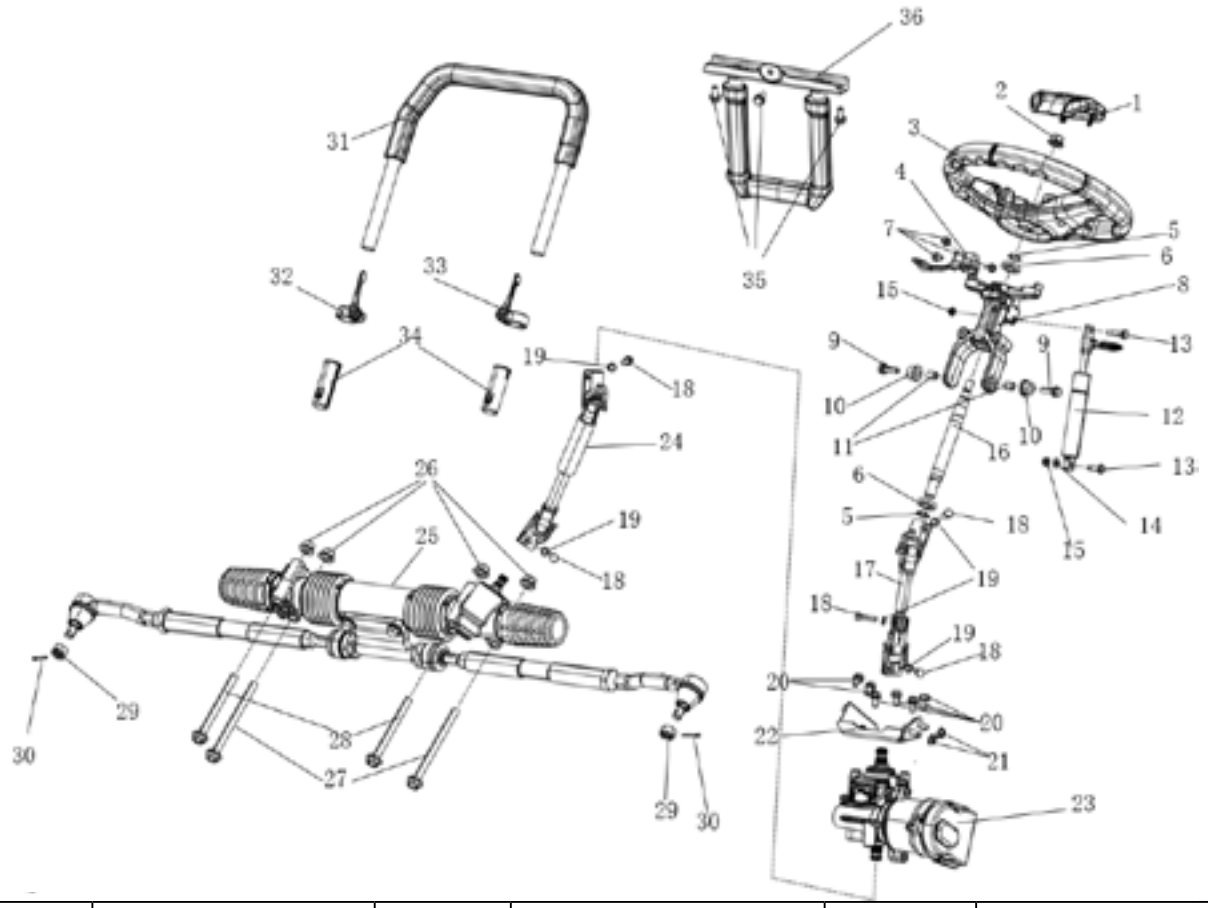

Number	Name	Number	Name	Number	Name
1	Steering wheel press cover	2	Nut	3	Multi-function steering wheel
4	Dashboard bracket	5	Circlip for shaft	6	Rolling bearings
7	Bolts	8	Steering wheel bracket	9	Bolts
10	Steering column nylon bushing	11	Steering column metal bushing	12	Gas spring assembly
13	Gas spring upper fixing bolt	14	Washer	15	Nut
16	Steering column	17	Steering universal joint assembly 1	18	Hex bolt
19	Washer	20	Bolts	21	Nut
22	EPS mounting bracket assembly	23	EPS power unit assembly	24	Steering universal joint assembly 2
25	Mechanical steering with cross tie rod assembly	26	Nut	27	Bolts
28	Bolts	29	Nut (type 1 hex slotted nut)	30	Cotter pin
31	Armrest tube assembly	32	LH armrest clamp assembly	33	RH armrest clamp assembly
34	Armrest tube bushing	35	Bolts	36	Rear armrest tube assembly

© CFMOTO Powersports, Inc. This manual is subject to all applicable copyright laws. Reproduction or duplication in any form, whole or in part, is strictly prohibited.

10.2 Steering Column and Steering Wheel Inspection

Position the vehicle on level ground. Grip the steering wheel and shake the steering wheel up and down to check for free play.

If free play is too large, confirm whether it is the steering column shaking or other parts loosened. Check whether the gas spring has a gap and whether the fixing bolt is tightened, etc., and service accordingly.

If the free play comes from the steering column, tighten the steering column locking nut or remove the steering column for further inspection and repair.

With the vehicle on level ground, turn the steering wheel clockwise and counterclockwise to check for agility.

If the steering is binding at some points, inspect wiring, cables or tie-rod ends for interference. If no interference, check the steering bearing for damage.

WARNING: Inspect the agility of steering system before every ride. Steering failure may result in severe injury or death.

10.3 Steering Wheel Height Adjustment

A tilt lever feature [1] allows the steering wheel to be adjusted to fit the operator. Pull up the lever and adjust the steering wheel tilt angle for comfort. Release the lever, the lever will automatically return to lock the steering wheel angle.

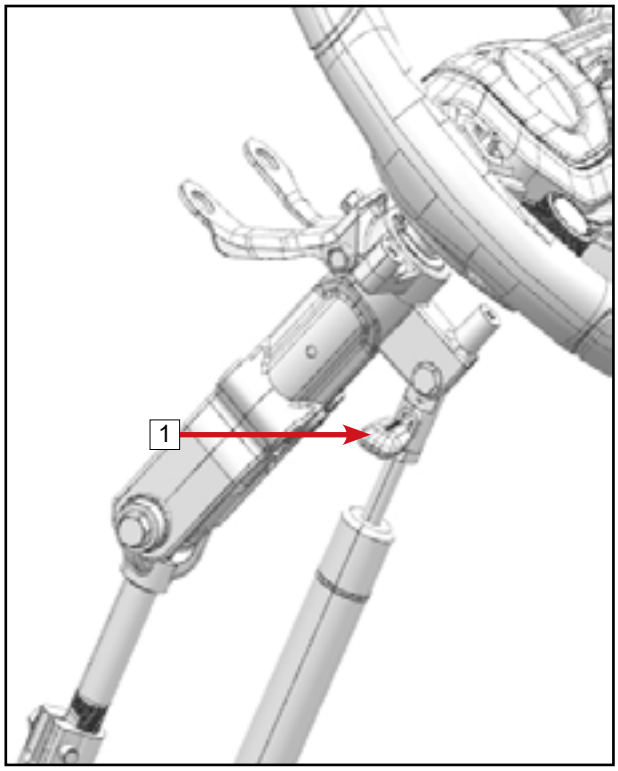

© CFMOTO Powersports, Inc. This manual is subject to all applicable copyright laws. Reproduction or duplication in any form, whole or in part, is strictly prohibited.

10.4 Steering Wheel Initial Center Adjustment

Remove steering wheel deco cover assembly [1].

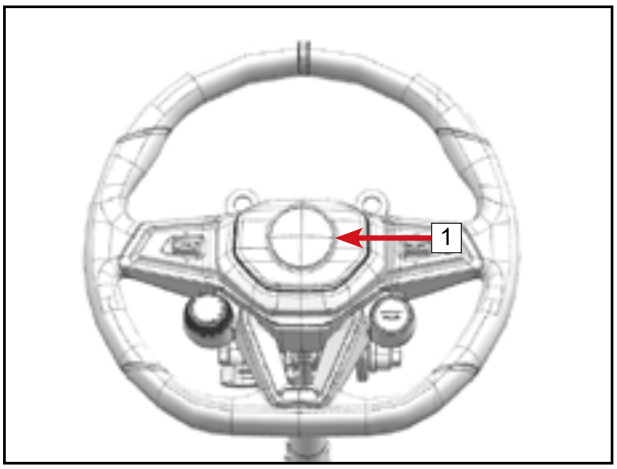

Loosen nut [2].
Turn the steering wheel clockwise to full 1.84 lap.
Turn the steering wheel counter-clockwise by 0.92 lap to align the steering wheel.
Ask another person to support the steering wheel to secure it.

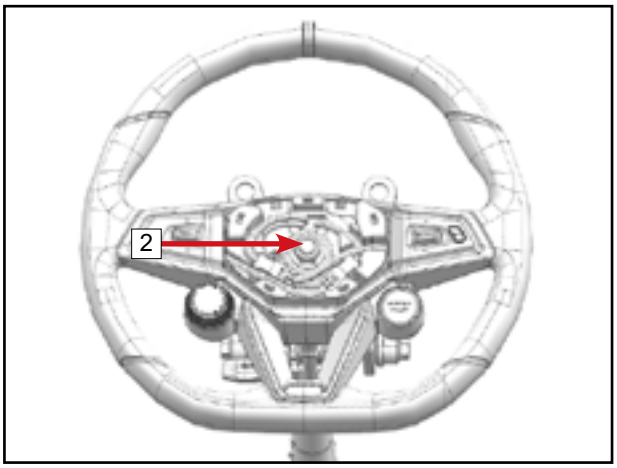

Loosen the nut [3].
Turn the LH&RH steering tie rods [4] until the deviation between front center of tire and the rear center of the tire is within:
5 - 10 mm.

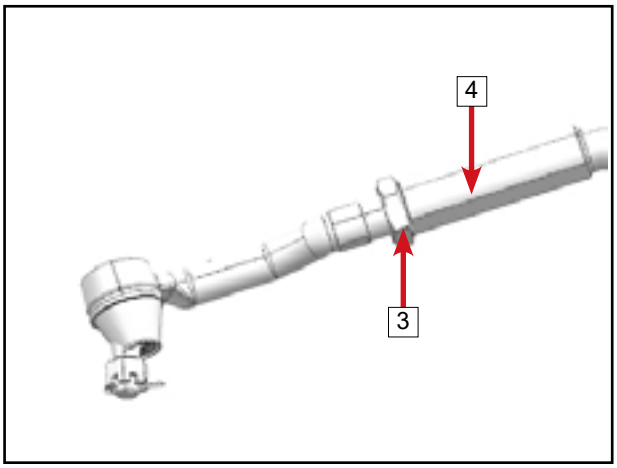

After adjusting the toe, install the steering wheel [5] so that it is symmetrical and in a horizontal position.
Tighten nut [2].

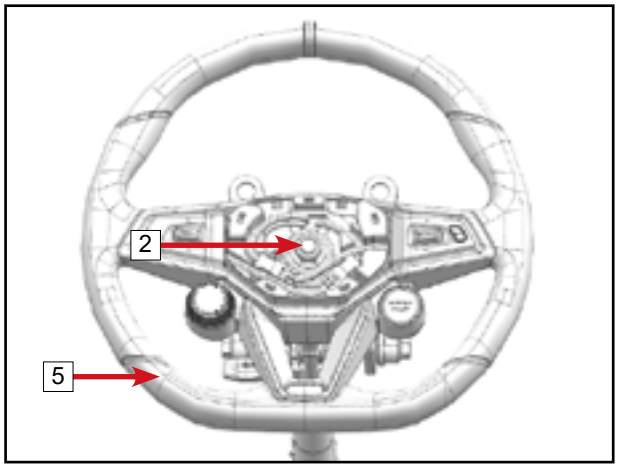

© CFMOTO Powersports, Inc. This manual is subject to all applicable copyright laws. Reproduction or duplication in any form, whole or in part, is strictly prohibited.

Install upper steering wheel deco cover assembly 1.

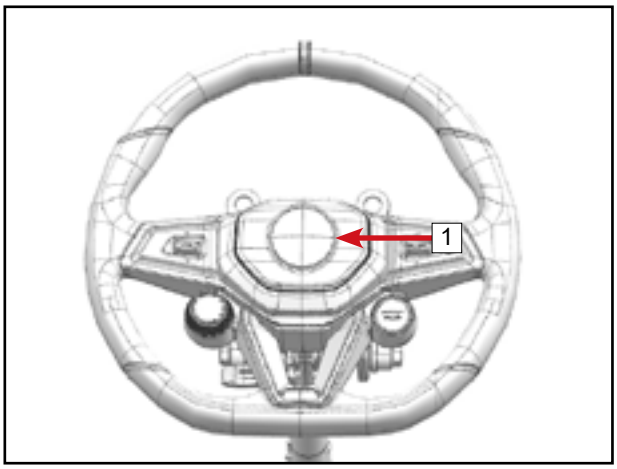

Method 2

Fix the vehicle on positioning device.
Remove steering wheel deco cover assembly 1.
Loosen nut 2.
Adjust the steering wheel 5.
After aligning the steering wheel 5, tighten nut 2.
Install upper steering wheel deco cover assembly 1.

10.5 Steering Wheel & Steering System

10.5.1 Steering Wheel

Removal

Remove the steering wheel press cover 1

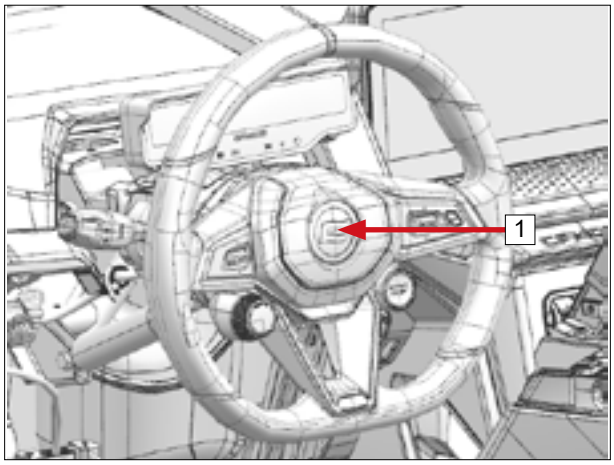

Remove the steering wheel lock nut 2.
Unplug the steering switch cable plugs 3.
Remove the multi-function steering wheel 4.
Pull the cable out of the steering wheel hole 5.

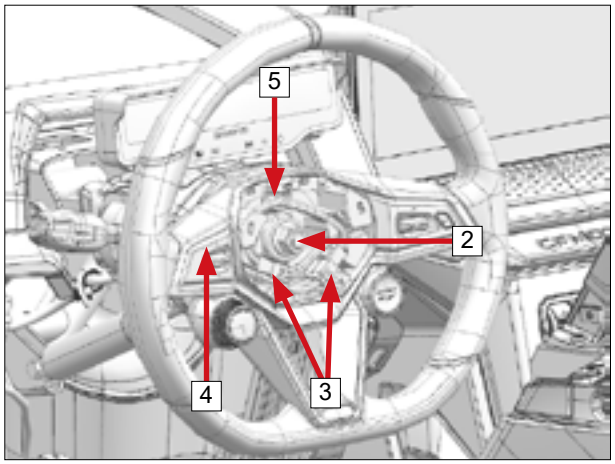

Installation

Reverse the removal procedures for installation. Refer to Chapter 02 for torque specifications.

NOTE: A bent or damaged steering wheel can cause material fatigue and the steering wheel can break. The steering wheel must be replaced.

© CFMOTO Powersports, Inc. This manual is subject to all applicable copyright laws. Reproduction or duplication in any form, whole or in part, is strictly prohbited.

10.5.2 Gas Spring Assembly

Removal

Remove the bolt and nut assembly 1.
Remove the gas spring 2.

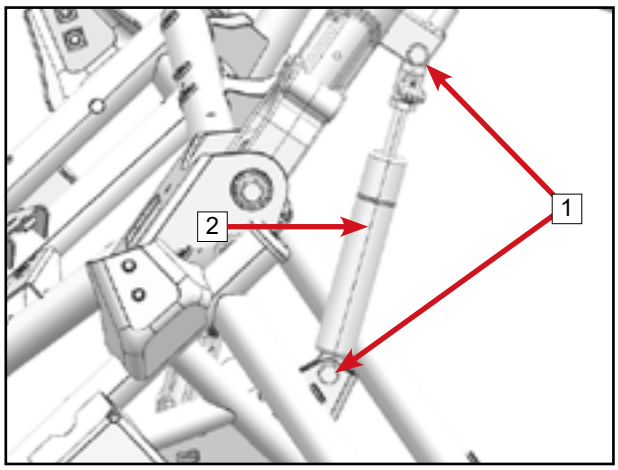

Remove the bolts 3 .
Remove the mounting bracket 4.

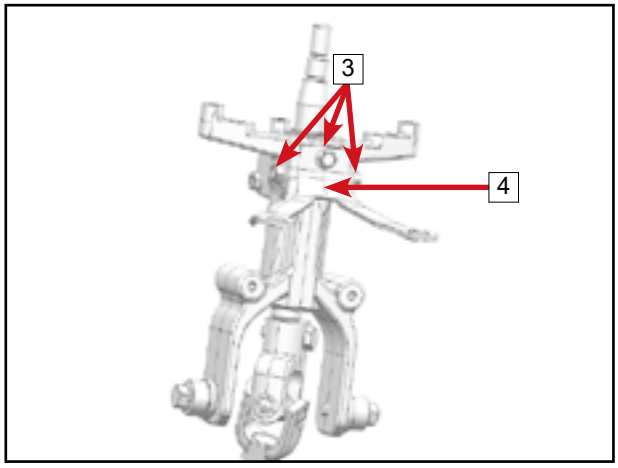

Remove the bolt 5.
Remove the bolts 6.
Remove the steering wheel mounting bracket 7.

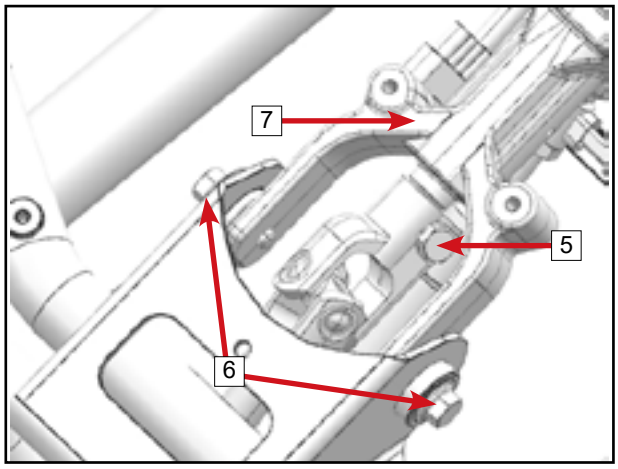

Installation

Reverse the removal procedures for installation. Refer to Chapter 02 for torque specifications.

10.5.3 Upper Steering Universal Joint

Removal

Remove the bolt and washer assembly 1.
Remove the upper steering universal joint assembly 2.

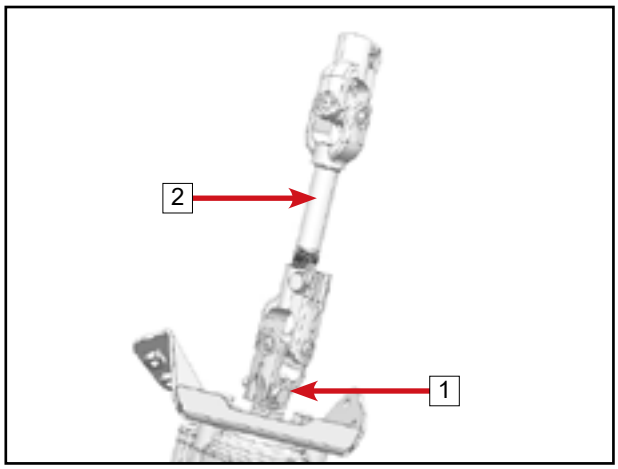

Installation

Reverse the removal procedures for installation. Refer to Chapter 02 for torque specifications.

© CFMOTO Powersports, Inc. This manual is subject to all applicable copyright laws. Reproduction or duplication in any form, whole or in part, is strictly prohbited.

10.5.4 Lower Steering Universal Joint

Removal

Loosen the two bolts [1].

Remove the lower steering universal joint assembly [2].

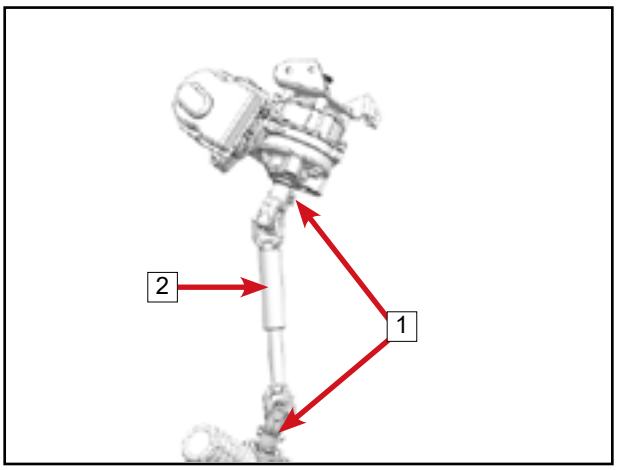

Installation

Reverse the removal procedures for installation. Refer to Chapter 02 for torque specifications.

10.5.5 Steering Tie Rod

Removal

Remove cotter pin [1].

Remove the slotted nut [2].

Remove the wheel end steering tie rod [3]:

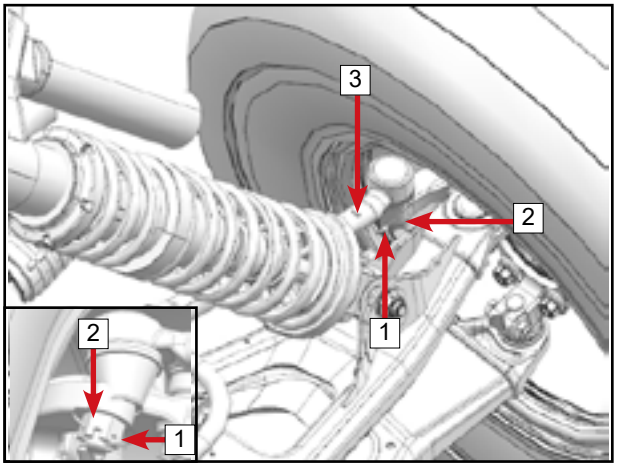

Installation

Reverse the removal procedures for installation. Refer to Chapter 02 for torque specifications.

Inspection

Check the steering unit components [1] (steering rod, steering tie rod ball head, ball head dust cover, etc.).

Look for loose fasteners, worn steering rod ball heads, or other damage. Also check that the cotter pin is in place, replace it if it has been removed.

The steering should be able to rotate freely over the full range of travel without restraint. Check that all cables, hoses and wiring are properly routed to ensure that the steering structure is not restricted or restrained in any way.

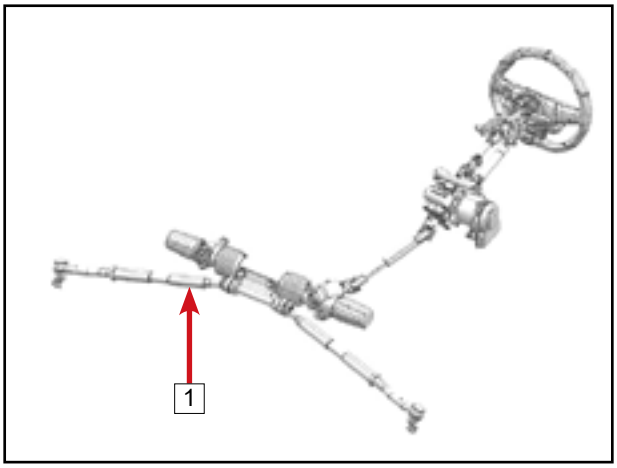

When adjusting the steering rods, make sure the steering wheel is centered straight ahead.

© CFMOTO Powersports, Inc. This manual is subject to all applicable copyright laws. Reproduction or duplication in any form, whole or in part, is strictly prohibited.

10.6 EPS

EPS (electric power steering) system controls power assistance based on vehicle speed and the torque input of the steering wheel to help the driver complete the steering. The system consists of a steering shaft, motor assembly and a controller (ECU). Because the system adopts a speed induction type, it can provide obvious help when the vehicle speed is low, and reduce the fatigue of the driver.

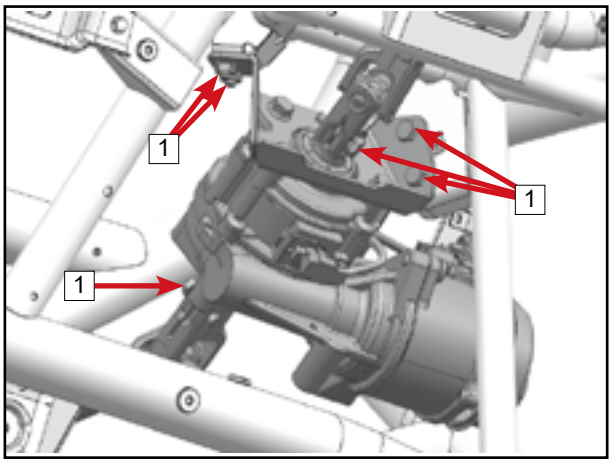

Removal

Pre-work

Unplug the connector connecting the EPS controller to the vehicle cable.
Remove body panels.

Main work

Remove 6 bolts 1.
Remove EPS assembly.
Remove the 4 bolts 2.
Remove the EPS controller 3.

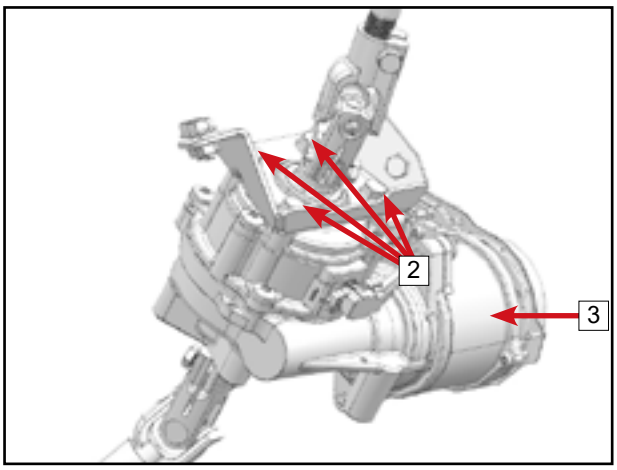

Installation

Reverse the removal procedures for installation. Refer to Chapter 02 for torque specifications.

See Chapter 12 for EPS fuse locations.

NOTE: Once installed, steering flexibility must be checked, left and right at the same angle.

Item	Specification
Operating voltage range	10.8V to 16V
Quiescent current	< 300 mA
Maximum supply current	35 A
Maximum motor current	65 A
Operating temperature range	-40°C to +105°C
Storage temperature range	-40°C to +105°C

Motor Type	Brushless Motor
Rated power	510 W
Rated voltage	DC12V
Rated current	81 A
Rated torque	4.3 N·m

© CFMOTO Powersports, Inc. This manual is subject to all applicable copyright laws. Reproduction or duplication in any form, whole or in part, is strictly prohbited.

EPS Operating System

NOTE:
No parts of the EPS system are available for repair. If malfunction occurs and it is not a cable connection problem, replace the EPS.

EPS Pin Functions:

A Power socket
1.Power positive
2.Power negative

B Vehicle signal socket
1. NULL
2. NULL
3. Ignition signal
4. CAN_H
5. NULL
6. LED (reserved)
7. NULL
8. CAN_L

C Torque-angle signal socket
1. Sensor GND
2. Sensor main moment
3. Sensor positive
4. Sensor secondary moment

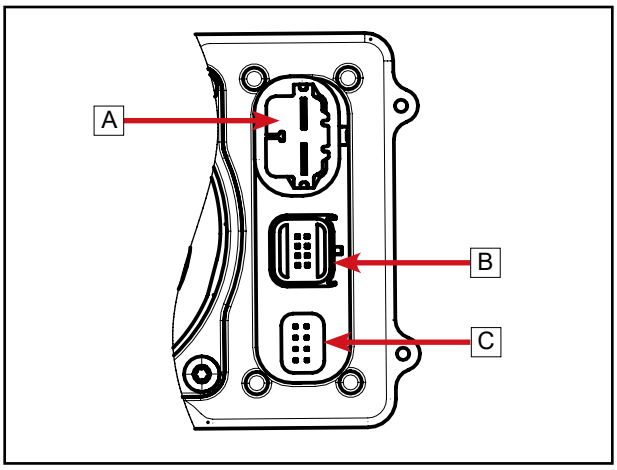

EPS connector outline

See Chapter 12 for EPS fault codes.

© CFMOTO Powersports, Inc. This manual is subject to all applicable copyright laws. Reproduction or duplication in any form, whole or in part, is strictly prohbited.

EPS Fault Analysis and Troubleshooting

Number	Problem	Possible Cause	Troubleshooting
1	Main moment sensor disconnected	1. Torque-angle sensor cable connector loose 2. Torque-angle sensor cable flooded or disconnected 3. Torque-angle sensor faulty 4. Controller internal torque-angle detects circuit fault	1. Re-plug the torque-angle sensor cable connector, if the fault is not resolved, carry out the next one 2. Visually check the plug for water. If yes, clean it and power on to test. Check cable for crushed, deformed, broken or torn. If found, reconnect the cable then power on to test. At this time, the air tightness can no longer be guaranteed, and is only used to make a judgment on the cause of the fault, whether the fault is cleared or not, it is necessary to implement the next. 3. Replace the EPS power unit assembly If none of the above measures resolve the problem, contact customer service
2	Main moment sensor output error	1. Torque-angle sensor cable connector loose 2. Torque-angle sensor cable has water 3. Torque-angle sensor faulty 4. Controller internal torque-angle detects circuit fault	1. Re-plug the torque-angle sensor cable connector, if the fault is not resolved, carry out the next one 2. Visually check the plug for water. If yes, clean it and power on to test. At this time, the air tightness can no longer be guaranteed, and is only used to make a judgment on the cause of the fault, whether the fault is cleared or not, it is necessary to implement the next. 3. Replace the EPS power unit assembly If none of the above measures resolve the problem, contact customer service

© CFMOTO Powersports, Inc. This manual is subject to all applicable copyright laws. Reproduction or duplication in any form, whole or in part, is strictly prohibited.

3	Secondary moment sensor disconnected	1. Torque-angle sensor cable connector loose 2. Torque-angle sensor cable has water or broken 3. Torque-angle sensor faulty 4. Controller internal torque-angle detects circuit fault	1. Re-plug the torque-angle sensor cable connector, if the fault is not resolved, carry out the next one 2. Visually check the plug for water. If yes, clean it and power on to test. Check cable for crushed, deformed, broken or torn. If found, reconnect the cable then power on to test. At this time, the air tightness can no longer be guaranteed, and is only used to make a judgment on the cause of the fault, whether the fault is cleared or not, it is necessary to implement the next. 3. Replace the EPS power unit assembly If none of the above measures resolve the problem, contact customer service
4	Secondary moment sensor output error	1. Torque-angle sensor cable connector loose 2. Torque-angle sensor cable has water 3. Torque-angle sensor faulty 4. Controller internal torque-angle detects circuit fault	1. Re-plug the torque-angle sensor cable connector, if the fault is not resolved, carry out the next one 2. Visually check the plug for water. If yes, clean it and power on to test. At this time, the air tightness can no longer be guaranteed, and is only used to make a judgment on the cause of the fault, whether the fault is cleared or not, it is necessary to implement the next. 3. Replace the EPS power unit assembly If none of the above measures resolve the problem, contact customer service

© CFMOTO Powersports, Inc. This manual is subject to all applicable copyright laws. Reproduction or duplication in any form, whole or in part, is strictly prohbited.

5	Main and secondary moment difference too big	1. Torque-angle sensor cable connector loose 2. Torque-angle sensor cable has water 3. Torque-angle sensor faulty 4. Controller internal torque-angle detects circuit fault	1. Re-plug the torque-angle sensor cable connector, if the fault is not resolved, carry out the next one 2. Visually check the plug for water. If yes, clean it and power on to test. At this time, the air tightness can no longer be guaranteed, and is only used to make a judgment on the cause of the fault, whether the fault is cleared or not, it is necessary to implement the next. 3. Replace the EPS power unit assembly If none of the above measures resolve the problem, contact customer service
6	Motor unassisted	1. Starting in a state of battery loss. 2. Controller drive circuit fault 3. Motor fault	1. Start the vehicle and wait for the battery to be partially charged before starting. Carry out the next if the fault is not resolved. 2. Replace the battery and start it again. Carry out the next if the fault is not resolved. 3. Replace the EPS power unit assembly If none of the above measures resolve the problem, contact customer service
7	Bus overcurrent	1. Controller drive circuit fault 2. Current sample circuit abnormal	1. Replace the EPS power unit assembly If none of the above measures resolve the problem, contact customer service
8	Pre-drive initialization configuration failed	Battery voltage too low	If the battery voltage has returned to normal, power-up to see fault still exists, it is recommended to depot repair
9	Broken rotor angle PWM signal break	1. Rotor angle chip failure 2. Angle signal transmission circuit faulty	1. Replace the EPS power unit assembly If none of the above measures resolve the problem, contact customer service
10	Rotor angle SPI break	1. Rotor angle chip failure 2. Angle signal transmission circuit faulty	1. Replace the EPS power unit assembly If none of the above measures resolve the problem, contact customer service
11	Both rotor angle signals are lost	1. Rotor angle chip failure 2. Angle signal transmission circuit faulty	1. Replace the EPS power unit assembly If none of the above measures resolve the problem, contact customer service

© CFMOTO Powersports, Inc. This manual is subject to all applicable copyright laws. Reproduction or duplication in any form, whole or in part, is strictly prohbited.

12	Steering angle disconnect	1.T orque-angle sensor cable connector loose 2. Torque-angle sensor cable has water or break 3. Torque-angle sensor faulty 4. Controller internal torque-angle detects circuit fault	1. Re-plug the torque-angle sensor cable connector, if the fault is not resolved, carry out the next one 2. Visually check the plug for water. If yes, clean it and power on to test. Check cable for crushed, deformed, broken or torn. If found, reconnect the cable then power on to test. At this time, the air tightness can no longer be guaranteed, and is only used to make a judgment on the cause of the fault, whether the fault is cleared or not, it is necessary to implement the next. 3. Replace the EPS power unit assembly If none of the above measures resolve the problem, contact customer service
13	Steering wheel angle range exceeded	1. Steering wheel angle midpoint offset 2. Steering gear damaged 3. Torque-angle sensor faulty	1. Use the diagnostic tool to read the steering wheel angle. If the reading direction angle can continuously change with the steering wheel movement, the torque-angle sensor is normal. Then determine whether the left and right limit angle exceeds the set threshold (±900°). If exceeded, use the diagnostic tool to center the steering wheel angle. If the fault does not resolve, carry out the next step. 2. Check whether the steering gear is damaged. If so, replace the steering gear to test. If the fault is not resolved, carry out the next one. 3. Replace the EPS power unit assembly If none of the above measures resolve the problem, contact customer service
14	Steering wheel midpoint value not written	1. Steering wheel angle not centered 2. Steering wheel angle midpoint cleared 3. External EEPROM chip inside controller is damaged	1. Use the diagnostic tool to center the steering wheel angle after the steering wheel is turned straight. If the fault is not resolved, carry out the next one. 2. Replace the EPS power unit assembly If none of the above measures resolve the problem, contact customer service

© CFMOTO Powersports, Inc. This manual is subject to all applicable copyright laws. Reproduction or duplication in any form, whole or in part, is strictly prohbited.

10.7 Shift Lever Inspection

Engage the shift lever [1] in P gear:
If the vehicle cannot be pushed, it is normal.
If the vehicle can be pushed, adjustment of the shift cable is required.

Engage the shift lever [1] in Neutral:
If the vehicle can be be pushed, it is normal.
If the vehicle cannot be pushed, adjustment of the shift cable is required.

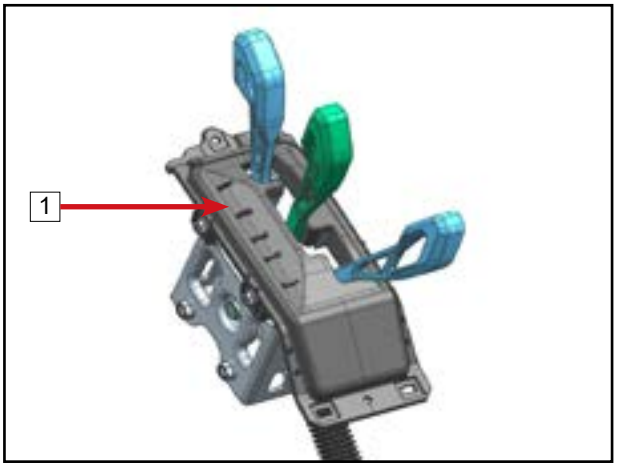

NOTE: When the vehicle load is greater than 195 kg, use low gear (L gear) for driving.

10.8 Shift Cable Adjustment

Engage the shift lever in P gear.
Loosen the 2 nuts [1] and adjust the shift cable [2] as necessary until the shift lever is aligned with P gear.
Tighten the 2 nuts [1].
Engage the lever in Reverse gear , Neutral , High gear , and Low gear respectively.
Repeat the adjustment procedure and adjust the shift cable as necessary.

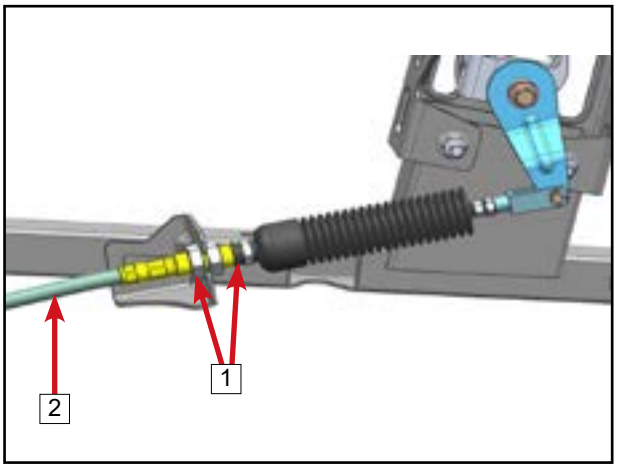

© CFMOTO Powersports, Inc. This manual is subject to all applicable copyright laws. Reproduction or duplication in any form, whole or in part, is strictly prohibited.

11.1 Main Specifications 11-2
11.2 Cooling System Exploded View 11-3
11.3 Coolant Level Inspection 11-4
11.4 Cooling System 11-4
11.4.1 Engine Expansion Tank 11-4
11.4.2 Cooling Pipes 11-5
11.5 Intercooler 11-6
11.5.1 Inspection 11-6
11.5.2 Sealing Test 11-7
11.6 Cooling Module 11-7
11.6.1 Cooling Fan 11-7
11.7 Inspection 11-8
11.8 Radiator Fan Inspection 11-10
11.9 Cooling System Sealing Inspection 11-12
11.10 Coolant Replacement 11-13

© CFMOTO Powersports, Inc. This manual is subject to all applicable copyright laws. Reproduction or duplication in any form, whole or in part, is strictly prohbited.

11.1 Main Specifications

Antifreeze & Water Mix Ratio: 1:1

Coolant	Capacity
Total capacity (including expansion tank)	6.5L
Replacement capacity (including expansion tank)	6.5 L
Reservoir	MIN 0.3 L, MAX 0.7 L, total 1 L

Recommended Coolant:
Any high quality Organic Acid Technology (OAT) antifreeze containing corrosion inhibitors for aluminum engines.
CFMOTO Recommended Coolant Freeze Protection Level: -35°C.

(The freezing resistance temperature of coolant is different with different mixing ratio. Adjust the mixing ratio according to the minimum temperature in the area where the vehicle is used.)

⚠WARNING:
Make sure radiator cools down before making operations on it.

⚠WARNING:
To avoid burns, do not remove the expansion tank pressure cap when the engine is hot.

⚠WARNING:
Only open the expansion tank pressure cap after the engine has cooled down to avoid scalding from coolant spray.

⚠CAUTION:
Do not use pure antifreeze or pure water in the cooling system. Pure water contains minerals and is prone to produce contaminants when used in cooling systems. In cold season, pure water can cause system damage or freeze the coolant which decreases cooling efficacy. For aluminum engines, it is strongly recommended to adhere to ethylene glycol coolant containing preservatives.

⚠WARNING:
The coolant is very hot and under pressure when driving. Do not open or touch the radiator, expansion tank, radiator hoses or other cooling system components when the engine is at operating temperature.

⚠CAUTION:
1. Check radiator after the engine and cooling system cool down. If burned, rinse wounded part with cold water immediately and seek medical attention.
2. Coolant is toxic. Do not drink nor spill on skin, eyes, clothing. If coolant comes into contact with eyes or skin, flush immediately with water and seek medical attention. If you swallow coolant, seek medical attention immediately. If coolant spills on clothes, change clothes.
3. Keep coolant out of the reach of children and pets.
4. To ensure the safety of the radiator, use the coolant specified or recommended by CFMOTO.

© CFMOTO Powersports, Inc. This manual is subject to all applicable copyright laws. Reproduction or duplication in any form, whole or in part, is strictly prohibited.

GO TO CHAPTER INDEX

11.2 Cooling System Exploded View

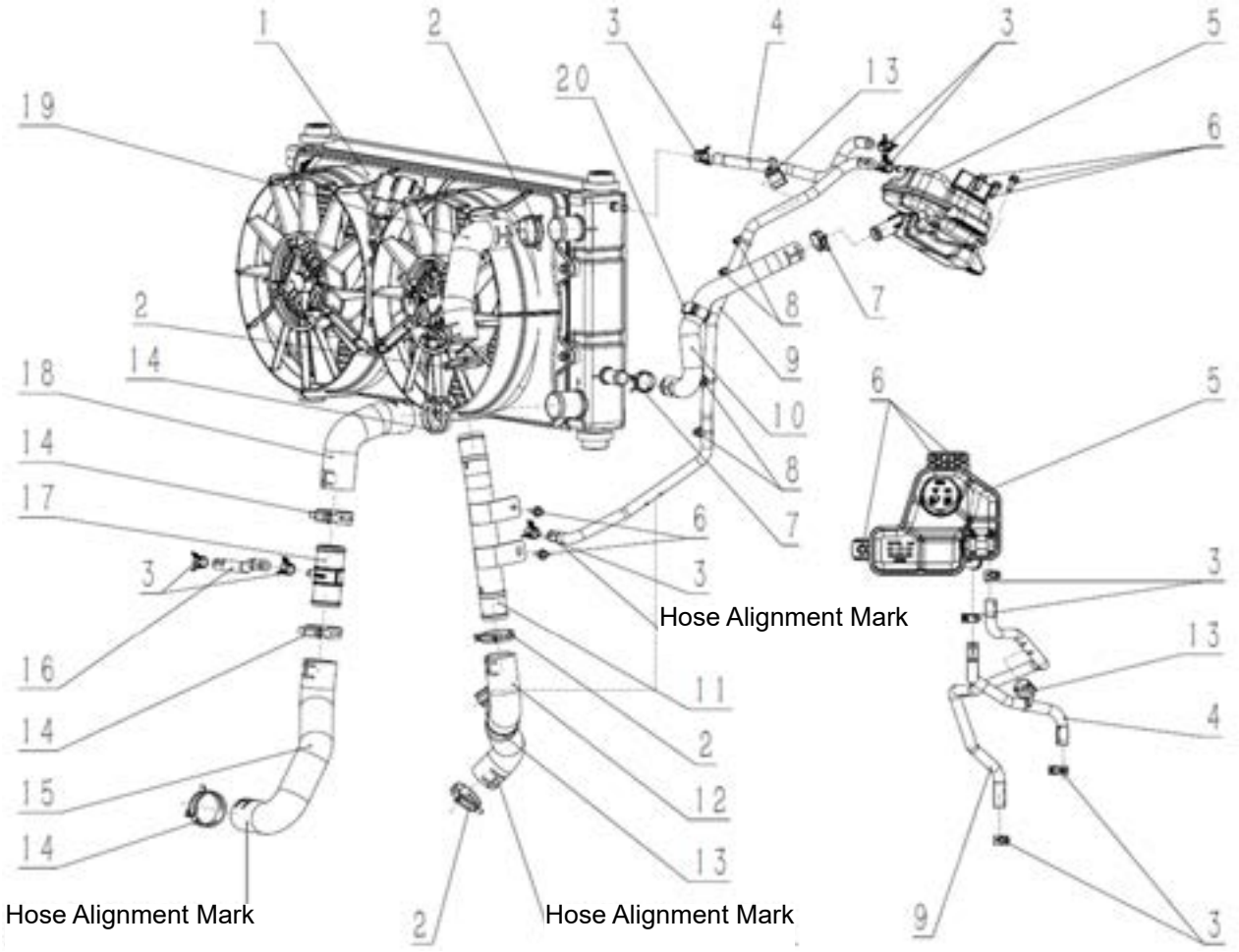

NO.	Name	NO.	Name	NO.	Name
1	Cooling module	2	Hose clip	3	Clamp A15
4	High-temperature radiator degas pipe	5	Expansion tank	6	Bolt
7	Clamp B28	8	Clasp 15	9	Engine degas pipe
10	Engine feed pipe	11	Connecting alum pipe 1	12	Engine outlet pipe
13	Hose clip 15-37	14	Spring band clamp	15	Engine inlet pipe
16	Turbocharger outlet pipe	17	Engine water inlet T-joint	18	High-temperature radiator outlet pipe
19	Turbocharger inlet pipe	20	Clasp 27		

© CFMOTO Powersports, Inc. This manual is subject to all applicable copyright laws. Reproduction or duplication in any form, whole or in part, is strictly prohbited.

11.3 Coolant Level Inspection

Park the vehicle on level ground, turn off power, keep it in parking state.

Wait until the engine has cooled down to room temperature before checking the coolant level.

Check whether the coolant level of the reservoir is between the upper and lower limits through the view hole 1.

If lower than the lower limit, unscrew the expansion tank cap, add coolant to the upper and lower limit, and tighten the cap.

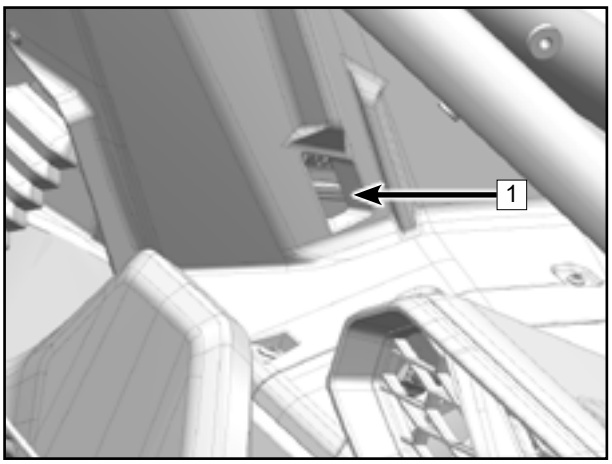

⚠WARNING

If level increases, contact your dealer to inspect the antifreeze content of the coolant as soon as possible.

Distilled water can be used for a short time if coolant is not available, softened tap water could be a second choice. Never add hard water or salt water, as it is harmful to the engine cooling system.

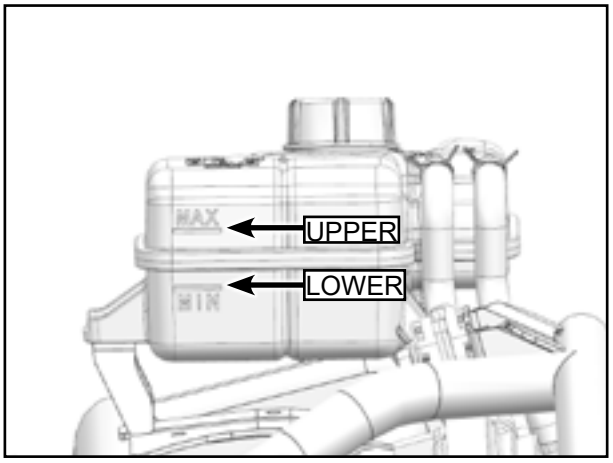

11.4 Cooling System

11.4.1 Engine Expansion Tank Removal

Open expansion tank pressure cap 1.

⚠CAUTION: If the engine was running before or is still running, do not unscrew the expansion tank cap. It is necessary to shut down the engine and wait until the engine cools completely. To avoid being scalded by coolant, wear gloves or cover with a thick towel when opening the expansion tank cap. Loosen the expansion tank cap for two turns to release the pressure, then remove it.

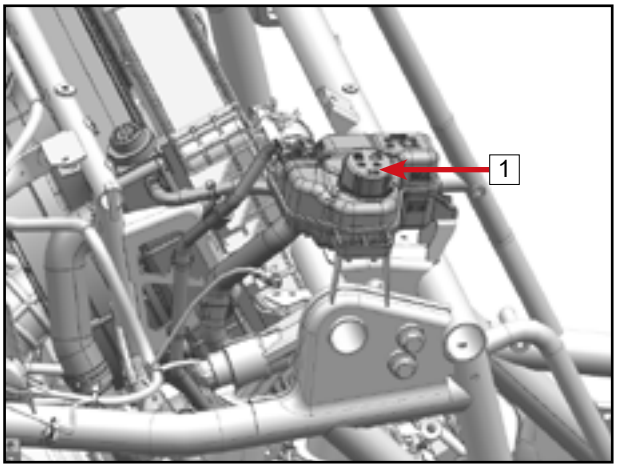

Place a container under the inlet pipe 2 of the engine to collect the coolant.

Remove the bottom clamp 3 of the engine inlet pipe.

Pull off the inlet pipe 2.

Drain the coolant.

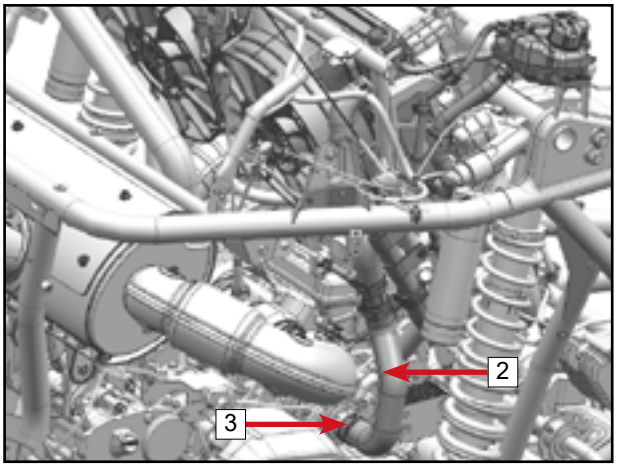

© CFMOTO Powersports, Inc. This manual is subject to all applicable copyright laws. Reproduction or duplication in any form, whole or in part, is strictly prohibited.

GO TO CHAPTER INDEX

Remove the bolts [4].

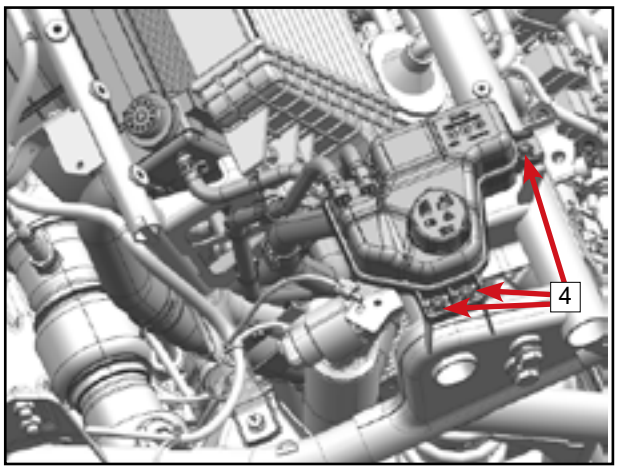

Remove the degas pipes [5].
Remove the engine feed pipe [6].
Remove the engine expansion tank [7].

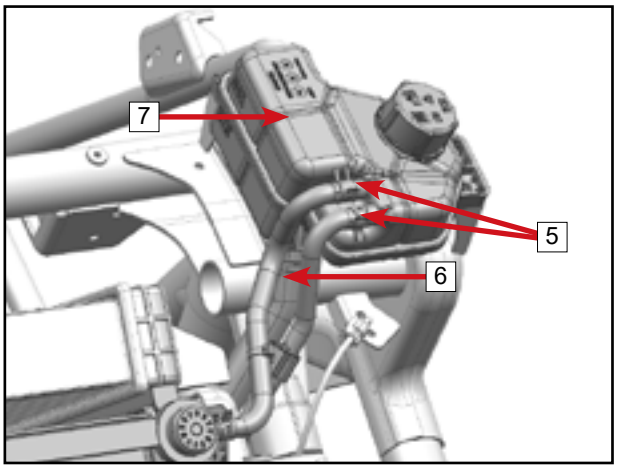

Installation
Reverse the removal procedures for installation.

11.4.2 Cooling Pipes

Removal
Remove clamp [1].
Remove engine feed pipe [2].
Loosen the clamp [3], and remove the clasp.
Remove radiator degas pipe [4].

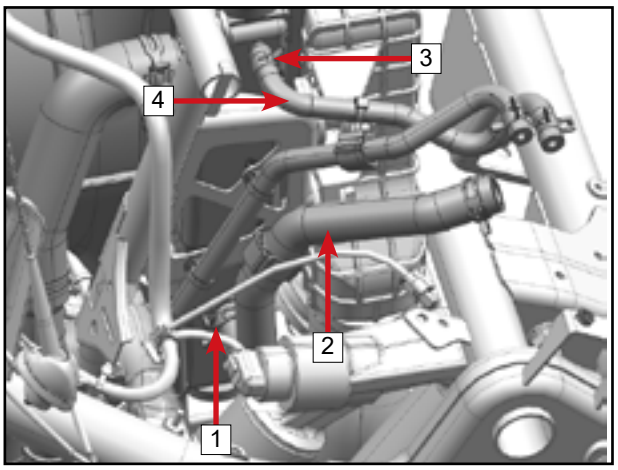

Remove the bolts [5].
Loosen the clamp [6] and clamp [7].
Remove radiator inlet pipe, engine outlet pipe and connecting aluminum pipe 1 assembly [8].
Loosen the clamp [9], and remove the clasp.
Remove engine degas pipe [10].

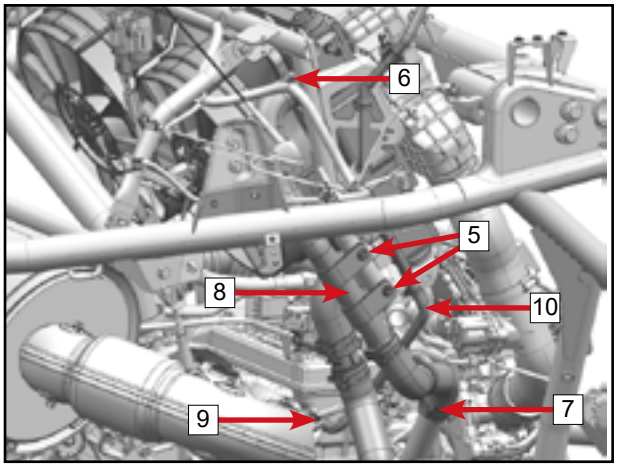

© CFMOTO Powersports, Inc. This manual is subject to all applicable copyright laws. Reproduction or duplication in any form, whole or in part, is strictly prohibited.

Remove the clamp on the engine side of the turbocharger outlet pipe 11.
Loosen the clamp 12, and remove one end of the radiator outlet pipe.
Loosen the clamp 13, and remove one end of the engine water inlet pipe.
Remove the radiator outlet pipe and the engine inlet pipe assembly 14.

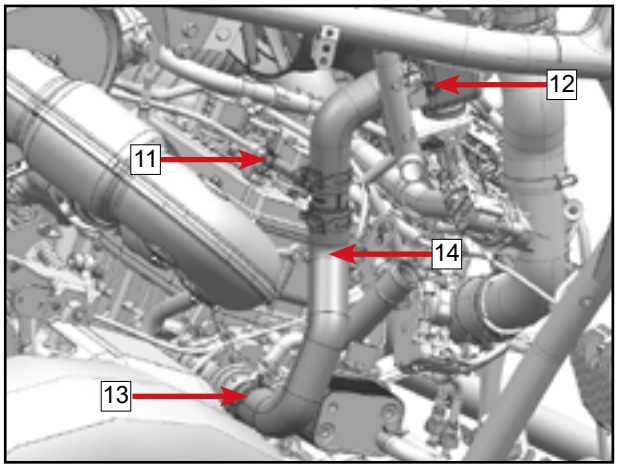

Installation
Reverse the removal procedures for installation.

11.5 Intercooler

Removal
Loosen the clamp 1.
Remove bracket bolts 2.

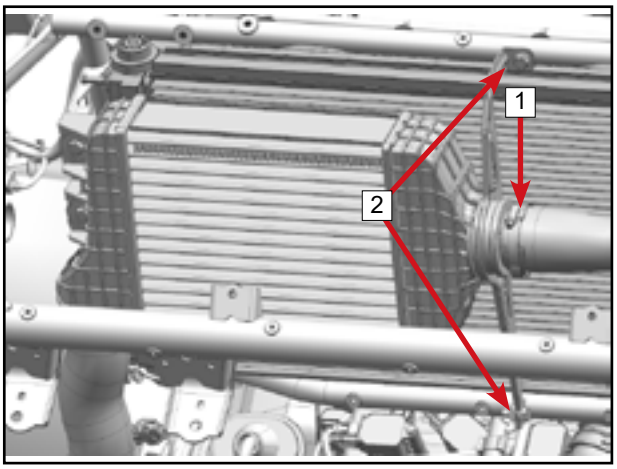

Loosen the clamp 3.
Remove bracket bolts 4.
Remove intercooler 5.

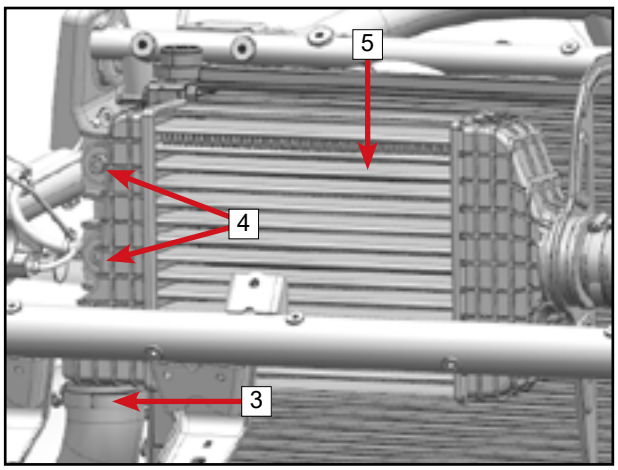

Installation
Reverse the removal procedures for installation.

11.5.1 Inspection

Check whether the heat dissipation fins of the intercooler are blocked by oil sludge, dust, etc., and whether there are phenomena such as aging rubber hoses or loose clamps.
If necessary, clean with low-pressure water or low-pressure compressed air. Do not use acidic or alkaline liquids to clean the intercooler surfaces.

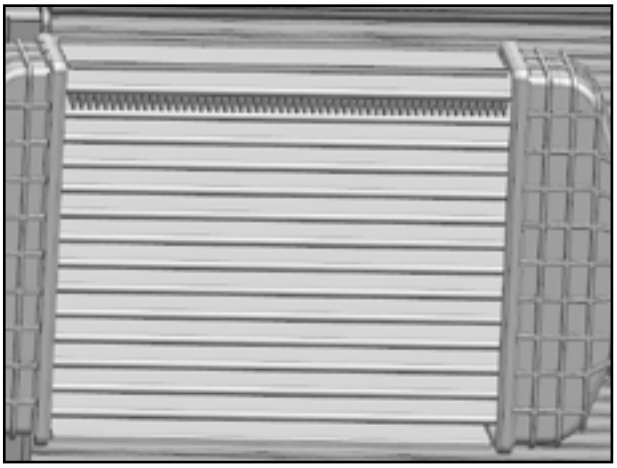

© CFMOTO Powersports, Inc. This manual is subject to all applicable copyright laws. Reproduction or duplication in any form, whole or in part, is strictly prohbited.

11.5.2 Sealing Test

Remove the intercooler from the engine and block one end of the outlet.
Introduce a pressure of 250kPa (36.2 Psi) (relative pressure) through the other end, and maintain the pressure for 1 minute. The leakage should be no more than 4ml/min.

If disassembly is not possible, pressurize the intake system while it is installed, then apply soapy water to all joints, hoses, and clamps to check for bubble formation.

11.6 Cooling Module

Removal

Remove the bolts 1 of the water tank mounting brackets.
Unplug the rear fan connector and remove the pipe connected to the cooling module 2. Tilt the cooling module 2 slightly towards the front of the vehicle and lift it up.
NOTE: When lifting out the cooling module, prevent the rubber pad assemblies 3 from falling and getting lost.

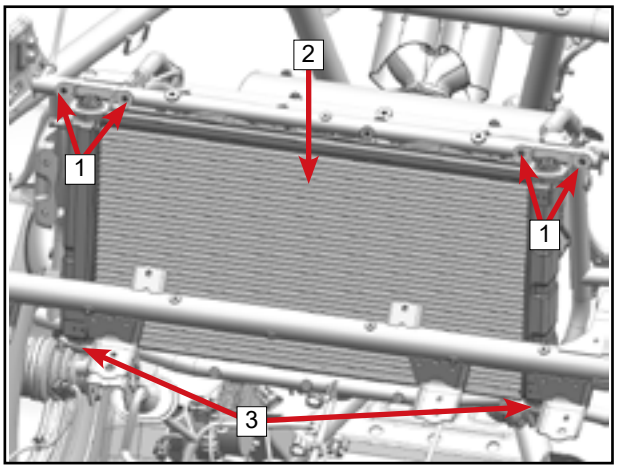

Installation

Reverse the removal procedures for installation.

11.6.1 Cooling Fan

Removal

Remove four bolts 1.
Remove the fan motor assembly 2.

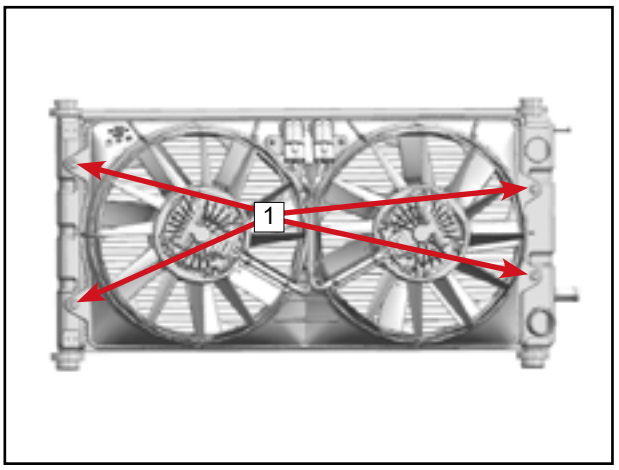

Installation

Reverse the removal procedures for installation.

© CFMOTO Powersports, Inc. This manual is subject to all applicable copyright laws. Reproduction or duplication in any form, whole or in part, is strictly prohbited.

11.7 Inspection

Check for any dirt on the surface of the radiator. If so, clean it with low-pressure water or low-pressure compressed air.

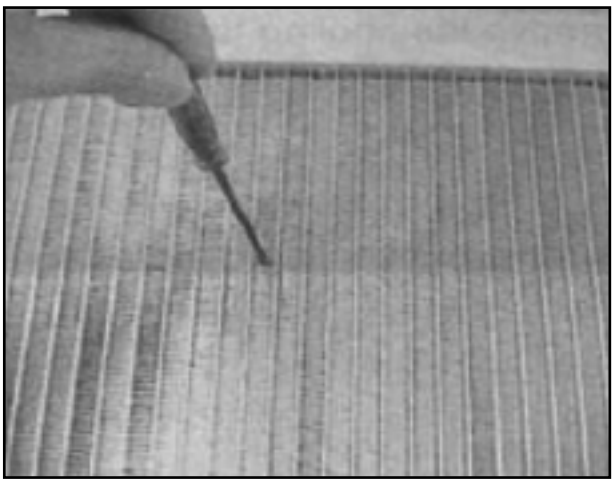

NOTE:
Do not clean radiator when the temperature is still high. Operate until radiator cools down.

NOTE:
Cleaning with a high-pressure cleaner can cause damage to the radiator blades, which can affect the radiator performance. Therefore, high pressure cleaning is not recommended.

NOTE:
Check the fins for deposits (e.g.: dirt, dust, leaves, etc.), any deposits prevent efficient cooling of the radiator.

Repair the heat sink with a small screwdriver.

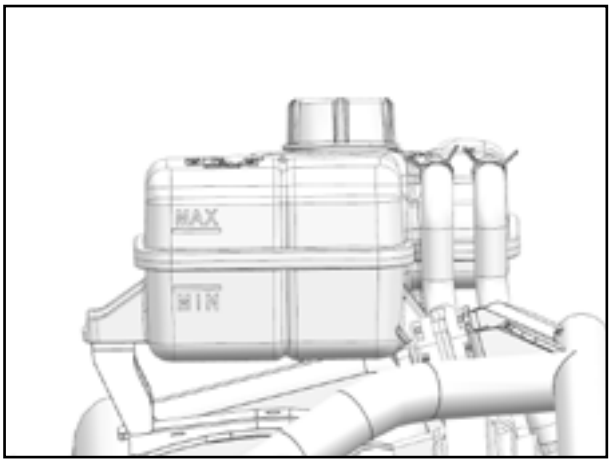

Engine Expansion Tank

Check if there is any damage or crack in the engine expansion tank. If damaged, replace it.

Check if there is any damage or crack in the pipes to the engine expansion tank. If found, replace them.



Pipe Clamps

Check the clamps for wear, deformation or cracks. If found, replace.

© CFMOTO Powersports, Inc. This manual is subject to all applicable copyright laws. Reproduction or duplication in any form, whole or in part, is strictly prohbited.

Inlet/Outlet Pipe
Check the radiator pipes for damage and cracks.
Rubber tubes will naturally age as a result of heating and time, and the cooling system when heated will cause the tubes to rupture. Pinch the rubber pipes with fingers to check for cracks, and replace if damaged or broken.

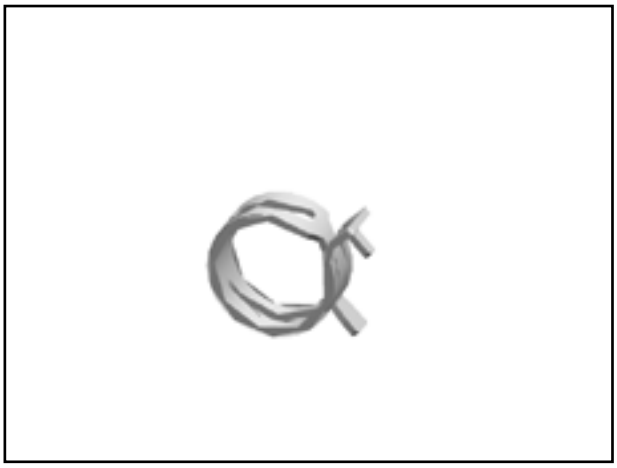

Check the fastening of the coolant pipe clamps, tighten or replace.

Check whether the water pump, water pipe and connection parts are leaking, and replace if there are any leaks.

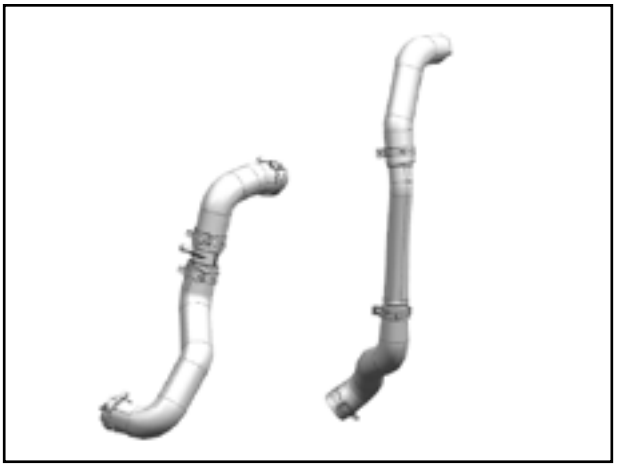

Water Pump Inspection
(For the removal of water pump, refer to Section 05 - Water Pump Assembly Removal)

Water Pump Impeller
Check if the water pump impeller 1 is damaged. If so, replace it with a new one.

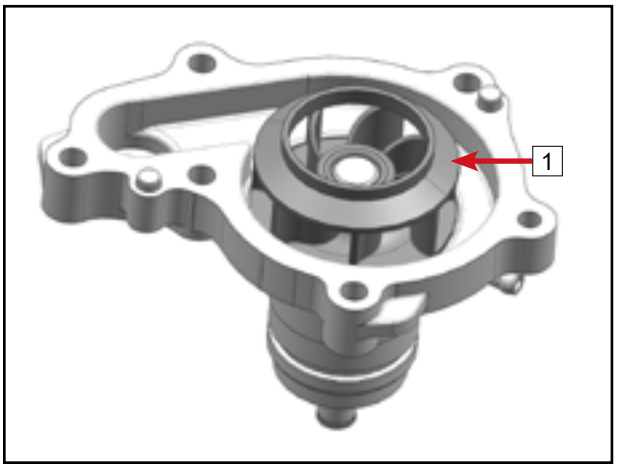

Water Pump Cover
Check if there are any cracks in the pump housing and if there are any pits or protrusions on the sealing surface. If found, replace the parts with new ones.
Check whether the sealing ring 2 of water pump has become hard, broken or damaged. If damaged, replace the pump.

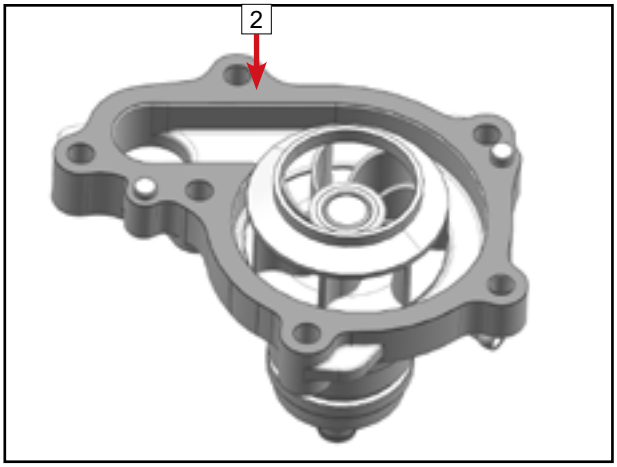

NOTE: The water pump assembly is a component with extremely high sealing requirements. During maintenance, except for the water pump housing, sealing gasket and O-ring which can be replaced separately, the rest should be replaced as a whole. It is recommended to replace the entire water pump assembly.

© CFMOTO Powersports, Inc. This manual is subject to all applicable copyright laws. Reproduction or duplication in any form, whole or in part, is strictly prohbited.

11.8 Radiator Fan Inspection

Analyze fan faults according to the following logical diagram.

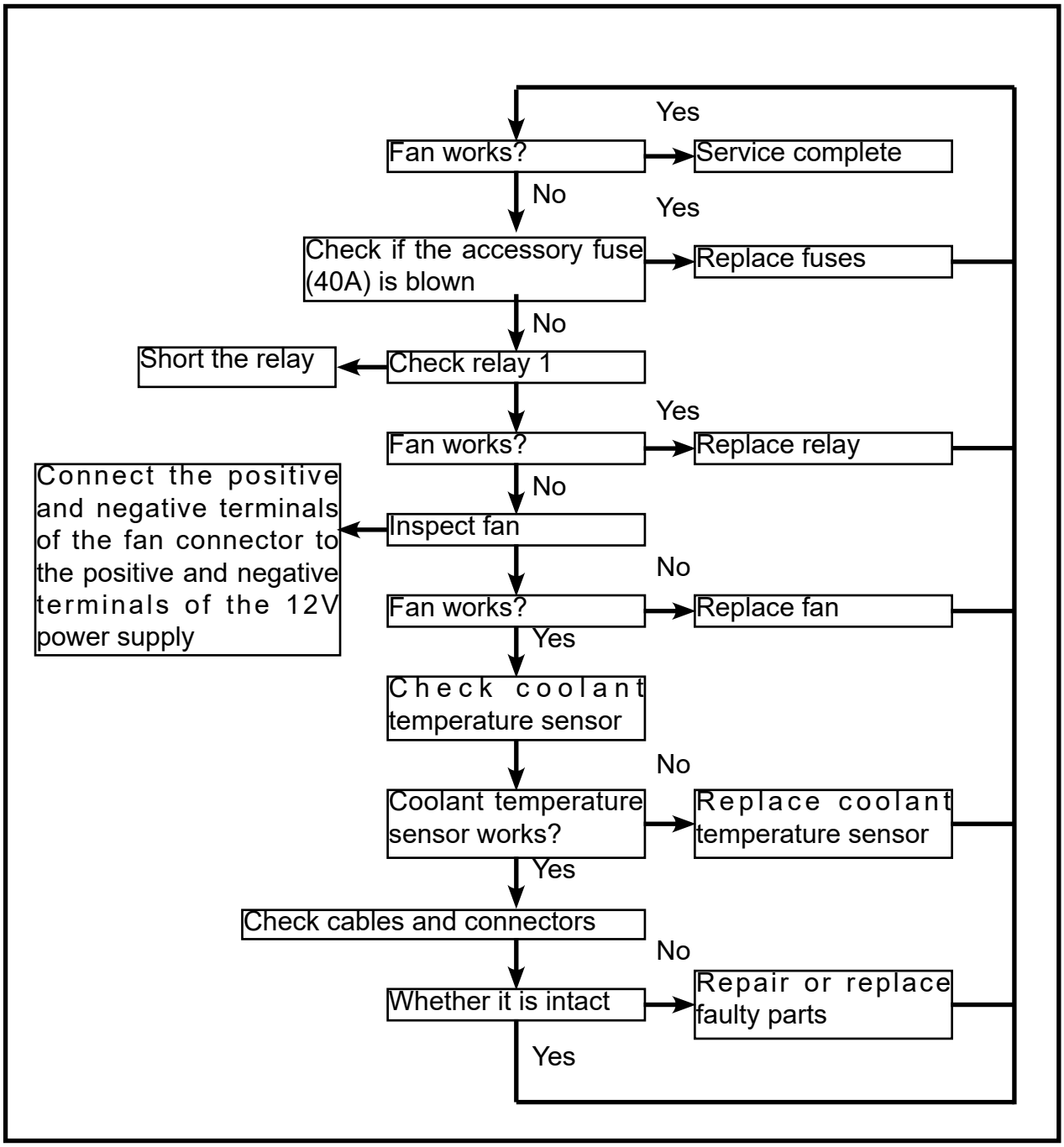

© CFMOTO Powersports, Inc. This manual is subject to all applicable copyright laws. Reproduction or duplication in any form, whole or in part, is strictly prohibited.

© CFMOTO Powersports, Inc. This manual is subject to all applicable copyright laws. Reproduction or duplication in any form, whole or in part, is strictly prohbited.

Radiator Fan Relay

Relay 1 Installation

NOTE: One relay exists for each of the high and low speeds. Ensure proper installation and operation. Ensure to align the inserts of relay with terminals of fuse holder correctly when installing.



Relay Function Inspection

The easiest way to check a relay is to remove it and bypass 2 it with a jumper. Replace the relay if radiator fan turns. The relay is shorted as shown.

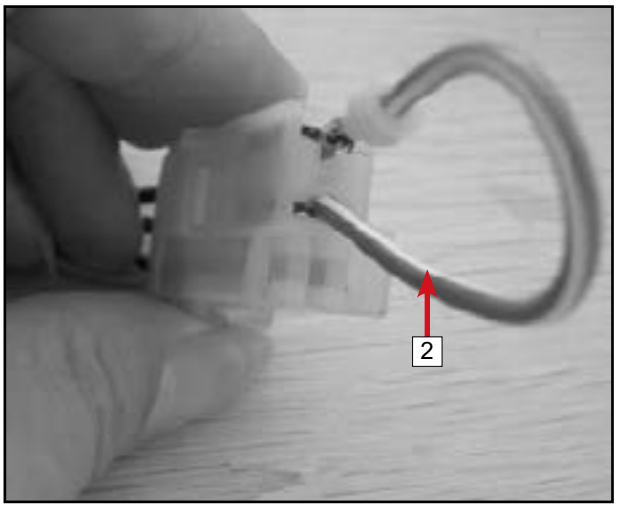

Relay Continuity Test

Remove the relay.

Use multimeter and select the Ω position.

Probe test locations are shown on the right.

Insert		Resistance
30	87	Open circuit (OL)



Connect the battery to test the relay again as shown on the right.

Insert		Resistance
30	87	0.2 or less

If one of the relay tests fails, replace the relay.

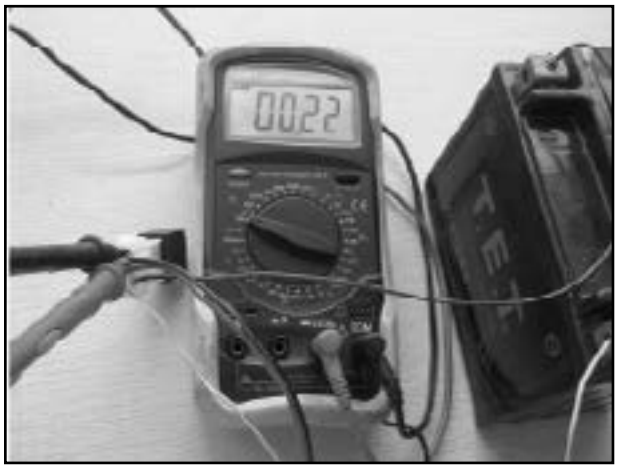

11.9 Cooling System Sealing Inspection

Sealing Inspection

Connect the tester [2] to the expansion tank opening [1].

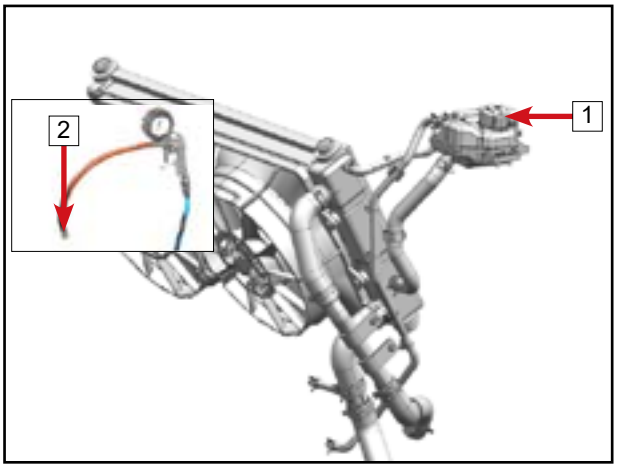

Pressurize 0.15 MPa (21.7 Psi) and maintain for 60 seconds.
If the pressure decreases in 60 s, it indicates a leakage in the cooling system. Inspect the whole system and replace the faulty parts.

⚠CAUTION: Cover a cloth on radiator cap when removing the tester, in case coolant spills out.

Inspect radiator pipes for damage or cracks.
Rubber tubes will naturally age as a result of heating and time, and may rupture when cooling system is heated.

Inspect pipes for cracks or damage by pinching it. Replace if any defect is found.

Inspect cooling system pipe clamps for tightness. Tighten or replace with new parts if loosen.

Inspect water pump, pipes and jointing areas for leaking. Replace if necessary.

© CFMOTO Powersports, Inc. This manual is subject to all applicable copyright laws. Reproduction or duplication in any form, whole or in part, is strictly prohibited.

11.10 Coolant Replacement

⚠WARNING

If the engine was running before or is still running, do not unscrew the expansion tank cap. It is necessary to shut down the engine and wait until the engine cools completely. To avoid being scalded by coolant, wear gloves or cover with a thick towel when opening the expansion tank cap. Loosen the expansion tank cap for two turns to release the pressure, then remove it.

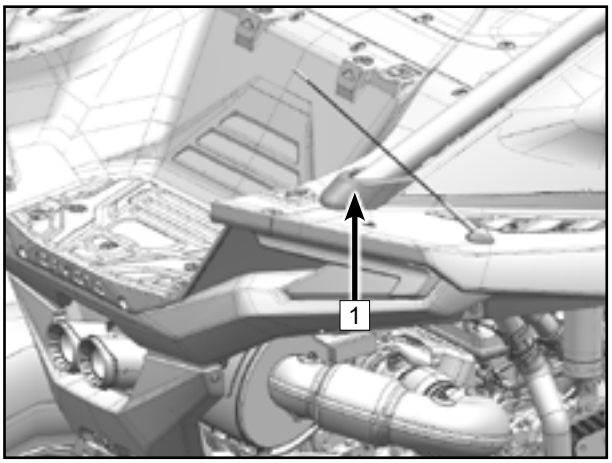

1. Place the vehicle on level ground and park it.
2. Remove the protective sleeve of the cab joint 1.

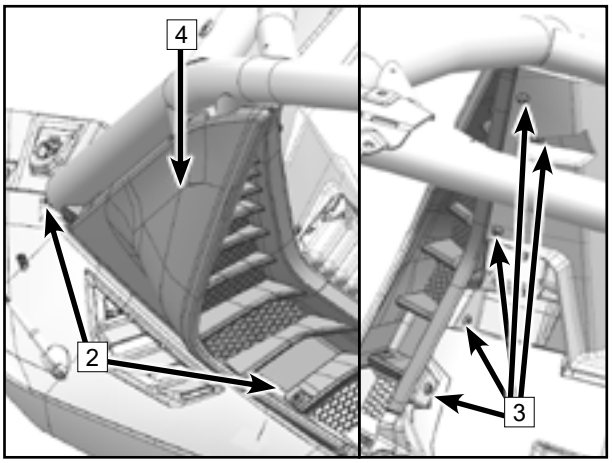

3. Remove the outer bolts 2.
4. Remove the inner bolts 3.
5. Remove the RH upper filter panel assembly 4.

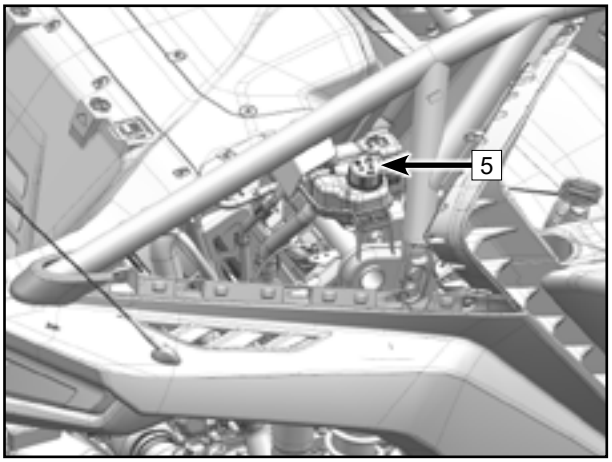

6. Remove expansion tank cover 5.

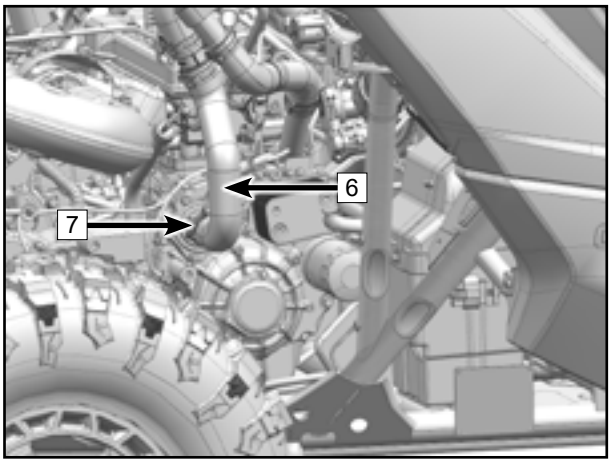

7. Place a container under the engine water inlet pipe 6 to collect the coolant.
8. Loosen the clamp 7 , remove the engine water inlet pipe 6 and drain the coolant.
9. After the coolant has been drained completely, reinstall the engine water inlet pipe 6 and fasten the clamp 7.

© CFMOTO Powersports, Inc. This manual is subject to all applicable copyright laws. Reproduction or duplication in any form, whole or in part, is strictly prohbited.

10. Open the pressure cover 8 of the expansion tank, add coolant, and fill the coolant to the MAX level line of the expansion tank.

11. Start the vehicle and let the engine idle for 60s (without closing the expansion tank pressure cap during this period). Observe if coolant flows out from the engine degas pipe to the exhaust port 9 in the expansion tank. Then, close the expansion tank pressure cap.
12. Keep the engine running until the cooling fan turns on, and then turn off the engine.
13. After the engine cools down, check the coolant level in the expansion tank to ensure that it is between the upper and lower limit lines. If the coolant is insufficient, add coolant between the upper and lower limit lines.
14. Check if there is any leakage in the cooling system. If found, inspect and repair the cooling system.
15. Tighten the expansion tank cover, reinstall any removed parts in the reverse order of disassembly, and reassemble the vehicle.
16. Properly dispose the discarded coolant.

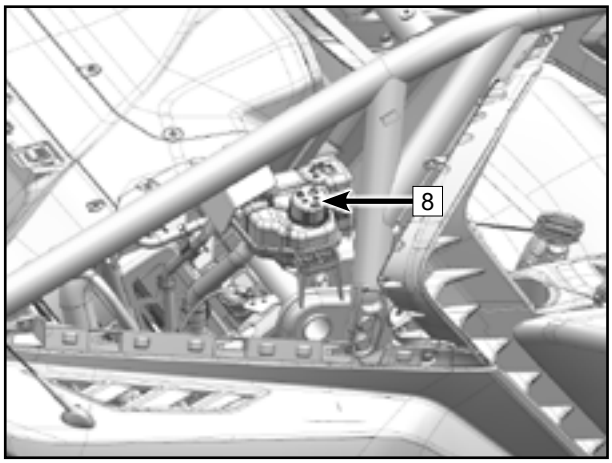

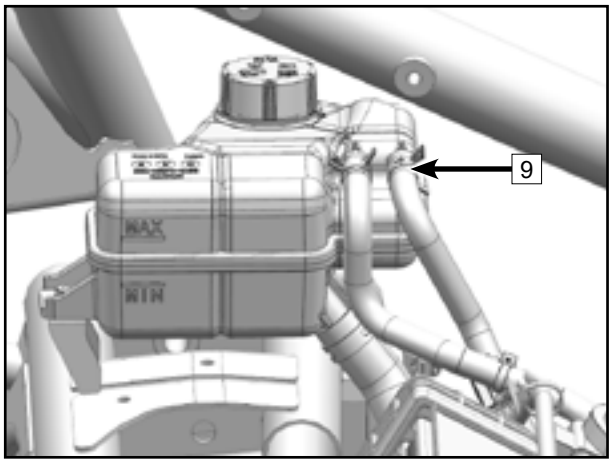

Recommended Antifreeze:

Any Organic Acid Technology (OAT) antifreeze with corrosion inhibitors suitable for aluminum engines.
CFMOTO recommends an antifreeze rating of: -35°C.
Antifreeze-to-water mixing ratio: 1:1.
Z10/Z10-4
Total coolant capacity (filled between MIN and MAX lines of the expansion tank): 6.87 qt. (6.5 L)
Coolant replacement volume: 6.87 qt. (6.5 L)
Expansion tank capacity: MIN line 0.3L，MAX line 0.7L, total volume 1L

© CFMOTO Powersports, Inc. This manual is subject to all applicable copyright laws. Reproduction or duplication in any form, whole or in part, is strictly prohbited.

12.1 Special Tools 12-5
12.1.1 DSCAN and Diagnostic Port 12-5
12.2 Lights 12-6
12.2.1 Lights Location Map 12-6
12.2.2 Headlight Inspection 12-8
12.2.3 Taillight Inspection 12-8
12.2.4 Brake Light Inspection 12-9
12.2.5 Turn Light Inspection 12-9
12.3 Fuse and Relay Box 12-10
12.3.1 Fuse/Relay Guide 12-10
12.3.2 Fuse and Relay Box (1) 12-10
12.3.3 Fuses and Relays (2) 12-11
12.4 Switch System 12-12
12.4.1 Switch Position Diagram 12-12
12.4.2 Switch Inspection and Testing 12-13
12.4.2.1 Dimmer Switch 12-13
12.4.2.2 Function Switch 12-14
12.4.2.3 2/4WD Switch 12-14
12.4.2.4 Mode Switch 12-14
12.4.2.5 Keyless Start Switch 12-15
12.4.2.6 Electronic Shock Absorber Switch 12-15
12.4.2.7 Volume Switch 12-15
12.5.8 Front Gear Case Electrical System 12-16
12.4.3.1 Front Gear Motor Input Voltage Check 12-16
12.5 Charging System and Battery 12-17
12.5.1 Charging System Location Map 12-17
12.6 Charging System 12-18
12.6.1 Charging Circuit Diagram 12-18
12.6.2 Battery 12-19
12.6.3 Battery Current Draw Test 12-20
12.6.4 Regulator 12-21

© CFMOTO Powersports, Inc. This manual is subject to all applicable copyright laws. Reproduction or duplication in any form, whole or in part, is strictly prohbited.

12.6.5 Regulator Pin Definition 12-22
12.6.6 Regulator Charging Voltage Inspection 12-23
12.6.7 Magneto Stator 12-23
12.6.7.1 Magneto Coil Path Check 12-24
12.7 Electric Horn (Select Markets) 12-25
12.8 Starting System 12-26
12.8.1 Starting System Location Map 12-26
12.9 Starter Relay 12-27
12.9.1.1 Starter Relay Circuit Check 12-27
12.9.1 Starter Motor 12-28
12.9.1.1 Exterior Inspection of Starter Motor 12-28
12.9.1.2 Starter Motor Operation Inspection 12-28
12.9.2 Engine RPM Sensor 12-29
12.9.2.1 Operation Check 12-29
12.11 Fuel System /EVAP Fuel Evaporation System 12-30
12.11.1 Fuel System/EVPA Location Map 12-30
12.12 EVAP/Fuel Pump 12-31
12.12.1 EVAP System Overview 12-31
12.12.2 Canister Test 12-32
12.12.3 Canister Magnetic Valve Test 12-32
12.12.4 Fuel Pump 12-33
12.12.4.1 Fuel Pump Pressure Test 12-33
12.12.4.2 Fuel Pump Removal 12-33
12.12.4.3 Fuel Level Sensor Test 12-33
12.13 EFI System 12-34
12.13.1 EFI System Location Map 12-34
12.14 EFI System 12-35
12.14.1 EFI System Construction 12-35
12.14.2 Sensors 12-35
12.14.3 ECM 12-35
12.14.4 Actuators 12-35

© CFMOTO Powersports, Inc. This manual is subject to all applicable copyright laws. Reproduction or duplication in any form, whole or in part, is strictly prohibited.

12.14.5 EFI System Maintenance Precautions 12-36
12.14.6 Electronic Throttle Body 12-37
12.14.6.1 Throttle Body Motor Fault Diagnosis 12-38
12.14.6.2 Throttle Body Sensor Fault Diagnosis 12-39
12.14.7 Electronic Throttle Pedal Assembly 12-40
12.14.7.1 E-throttle Pedal Pin Definition 12-40
12.14.7.2 Electronic Throttle Assembly Inspection 12-40
12.14.7.3 Electronic Throttle Pedal Sensor Fault Diagnosis 12-41
12.14.8 Ignition Coil Inspection 12-42
12.14.9 Coolant Temperature Sensor 12-43
12.14.10 Oxygen Sensor 12-44
12.14.11 Fuel Injector 12-44
12.14.11.1 Fuel Injector Resistance Test 12-44
12.14.11.2 Fuel Injector Input Voltage Detection 12-44
12.14.12 Air Intake Pressure & Temperature Sensor 12-45
12.14.13 ECM 12-46
12.15 EPS 12-49
12.15.1 EPS Location Map 12-49
12.15.2 EPS Fault Code Table 12-50
12.16 T-BOX 12-55
12.16.1 T-BOX PIN Function 12-55
12.16.2 T-BOX Troubleshooting 12-56
12.17 Electronics System 12-57
12.17.1 Electronic Device Overview 12-57
12.17.2 BCM 12-58
12.17.2.1 BCM Pin Function 12-58
12.17.3 MMI Instrument 12-61
12.17.3.1 MMI Pin Function 12-61
12.17.3.2 MMI Fault Code Table 12-62
12.17.3.3 MMI Replacement 12-63
12.17.4 Speed Sensor 12-64
12.17.4.1 Speed Sensor Pin Definition 12-64

© CFMOTO Powersports, Inc. This manual is subject to all applicable copyright laws. Reproduction or duplication in any form, whole or in part, is strictly prohbited.

12.17.4.2 Speed Sensor Fault Diagnosis 12-64
12.17.5 Gear Sensor 12-65
12.17.5.1 Gear Sensor Pin Definition 12-65
12.17.5.2 Gear Sensor Fault Diagnosis 12-65
12.17.6 Turbocharger Exhaust Waste Gate 12-65
12.17.6.1 Exhaust Waste Gate Pin Definition 12-65
12.17.6.2 Exhaust Waste Gate Fault Diagnosis 12-66
12.17.7 PEPS 12-67
12.17.7.1 PEPS Pin Function 12-67
12.17.7.2 NFC Key Matching 12-67
12.17.7.3 PEPS Fault Code Table 12-68
12.17.8 Audio Amplifier 12-69
12.17.8.1 Audio Amplifier Pin Function 12-69
12.17.9 Camshaft Sensor 12-70
12.17.9.1 Camshaft Sensor Pin Function 12-70
12.17.9.2 Camshaft Sensor Voltage Inspection 12-70
12.17.10 Boost Pressure Temperature Sensor 12-70
12.17.10.1 Boost Pressure Temperature Sensor Pin Definition 12-70
12.17.10.2 Boost Pressure Temperature Sensor Fault Diagnosis 12-71
12.17.11 Dashboard 12-72
12.17.11.1 Dashboard Pin Function 12-72
12.18 Fault Code Diagnostics 12-73
12.18.1 ECM Fault Code Table 12-73
12.18.2 BCM Fault Code Table 12-77
12.18.3 DASH Fault Code Table 12-82
12.18.4 EDS Fault Code Table 12-83
12.18.5 FAMD Fault Code Table 12-85
12.18.6 MMI Fault Code Table 12-87
12.18.7 PEPS Fault Code Table 12-88
12.18.8 SCU Fault Code Table 12-89
12.19 Troubleshooting Based on Engine Fault 12-92

© CFMOTO Powersports, Inc. This manual is subject to all applicable copyright laws. Reproduction or duplication in any form, whole or in part, is strictly prohibited.

12.1 Special Tools

CFMOTO DSCAN Diagnostics



Functions: Read/clear EFI system fault code, observe data flow, update ECU program, etc.

12.1.1 DSCAN and Diagnostic Port

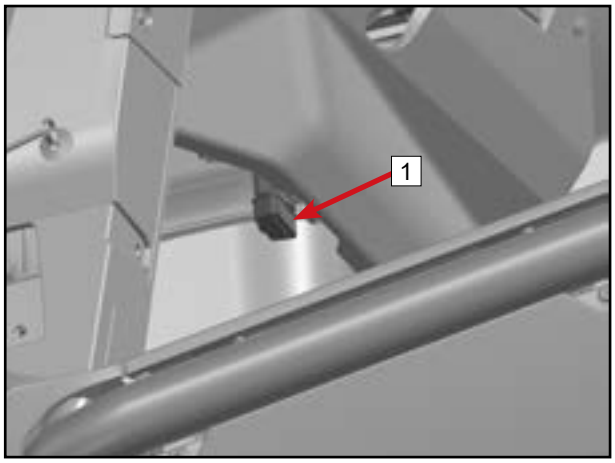

OBD diagnostic port 1 is located under the front service cover.

The 16 pin DSCAN VCI module connects to the OBD diagnostic port.

A Type-C cable connects the VCI module to the user device containing the DSCAN software.

For specific operation and functions, refer to the help files included in the DSCAN software.

Z10 Fox Suspension App

NOTE: To correctly read and diagnose suspension system fault codes, technicians should download and connect to the vehicle with the FOX App. Refer to the Owner's Manual for download and pairing instructions.

A flashing icon displays on the MMI to alert vehicle users of a suspension electrical issue.

© CFMOTO Powersports, Inc. This manual is subject to all applicable copyright laws. Reproduction or duplication in any form, whole or in part, is strictly prohbited.

12.2 Lights

12.2.1 Lights Location Map

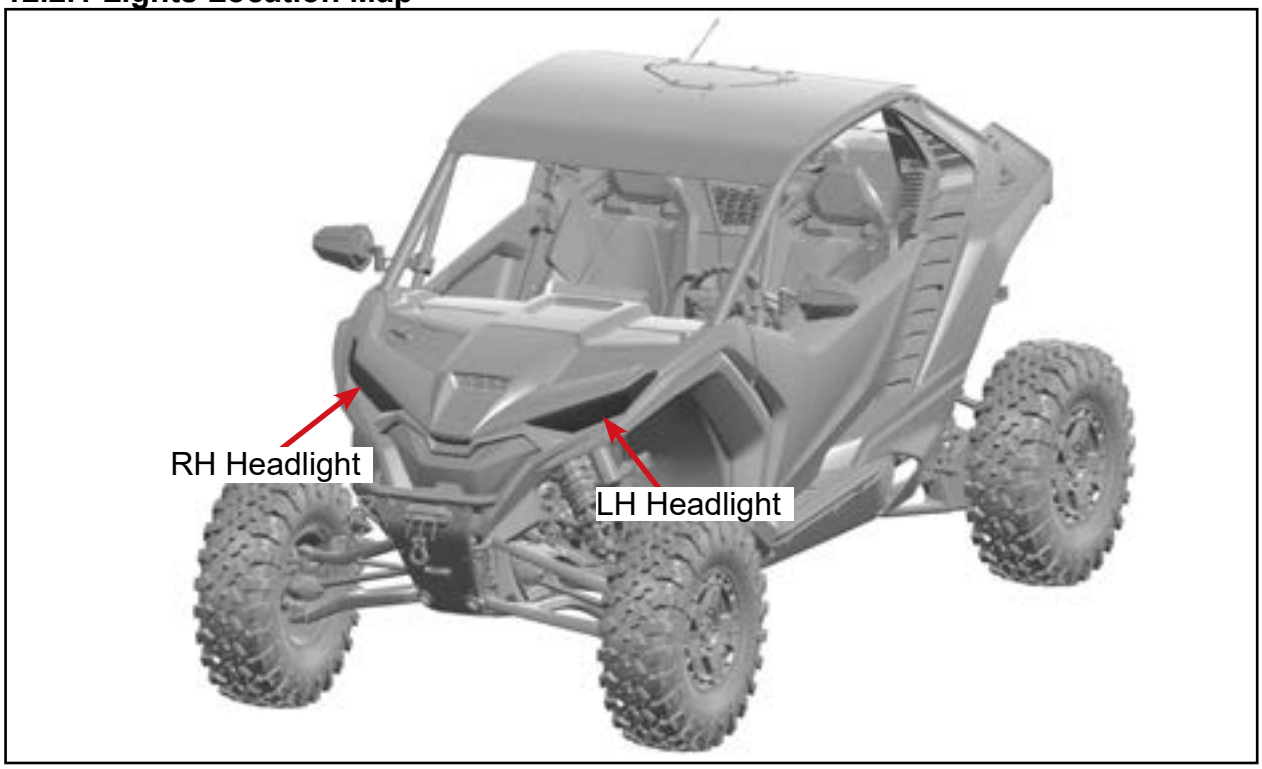

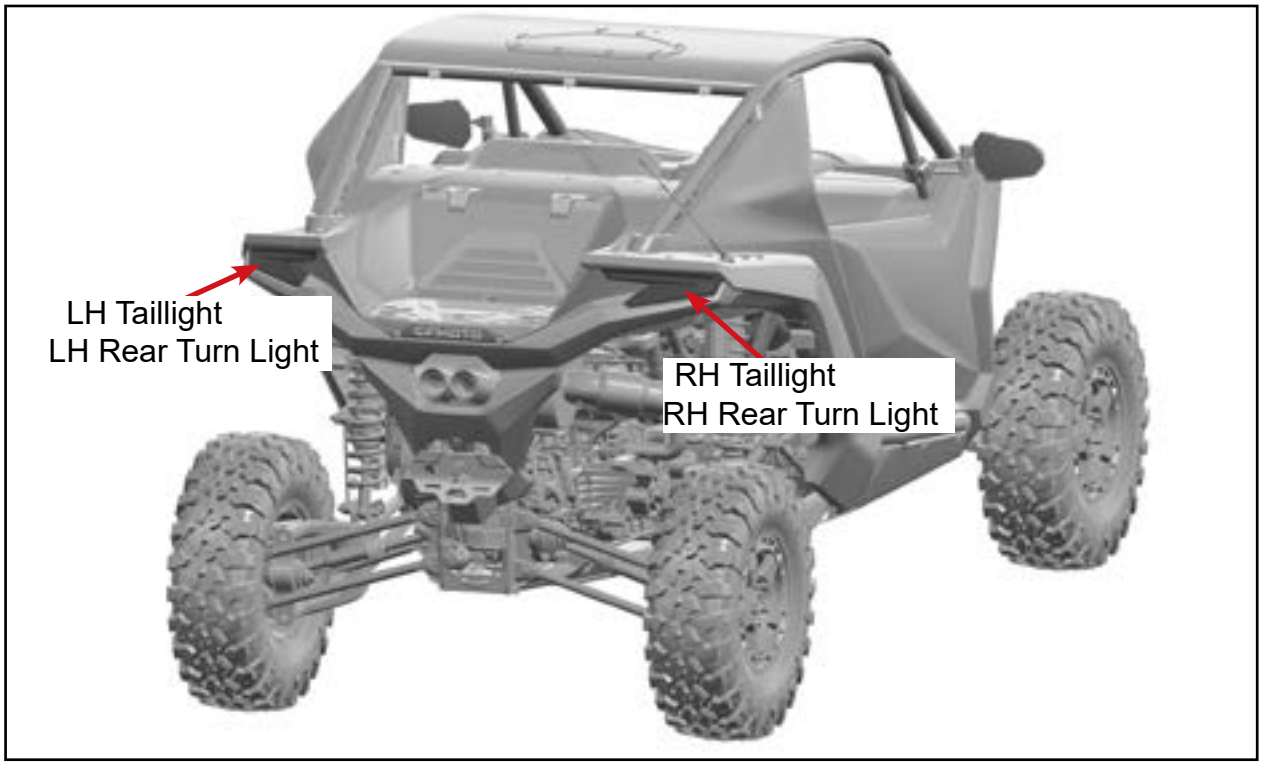

© CFMOTO Powersports, Inc. This manual is subject to all applicable copyright laws. Reproduction or duplication in any form, whole or in part, is strictly prohibited.

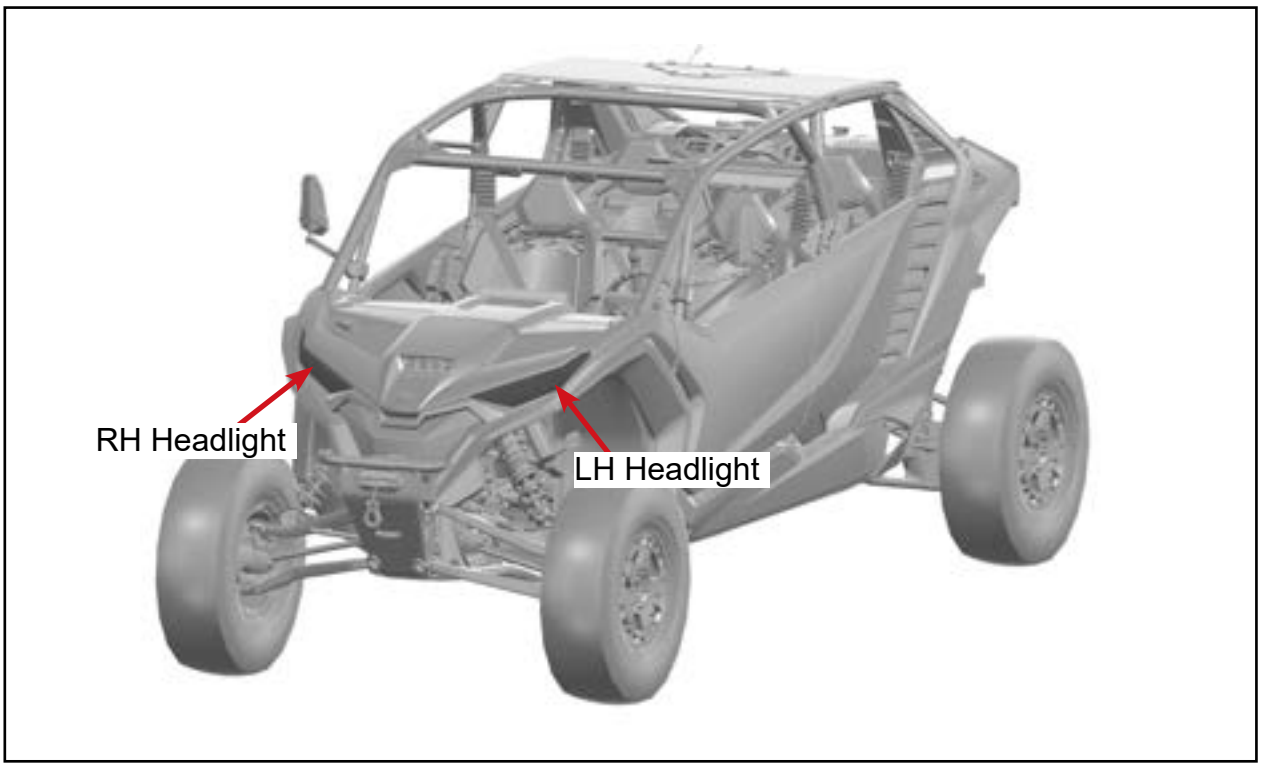

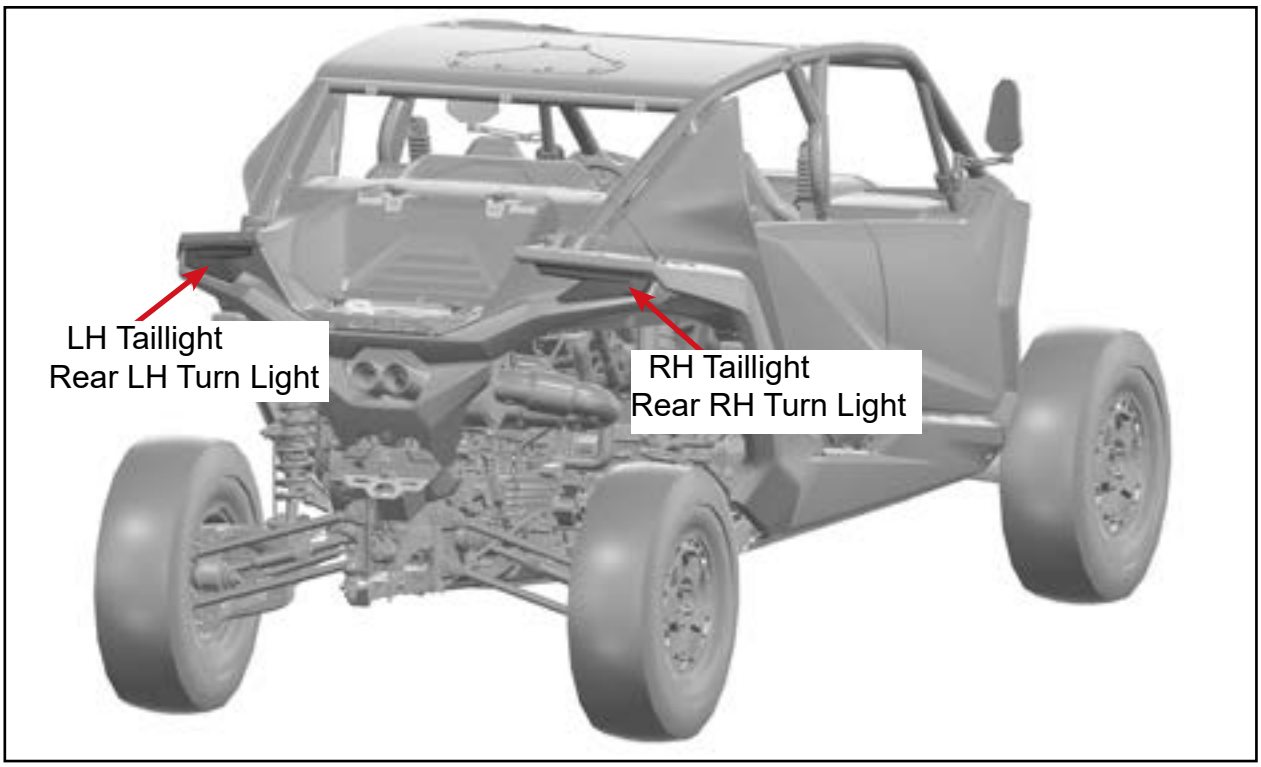

© CFMOTO Powersports, Inc. This manual is subject to all applicable copyright laws. Reproduction or duplication in any form, whole or in part, is strictly prohbited.

12.2.2 Headlight Inspection

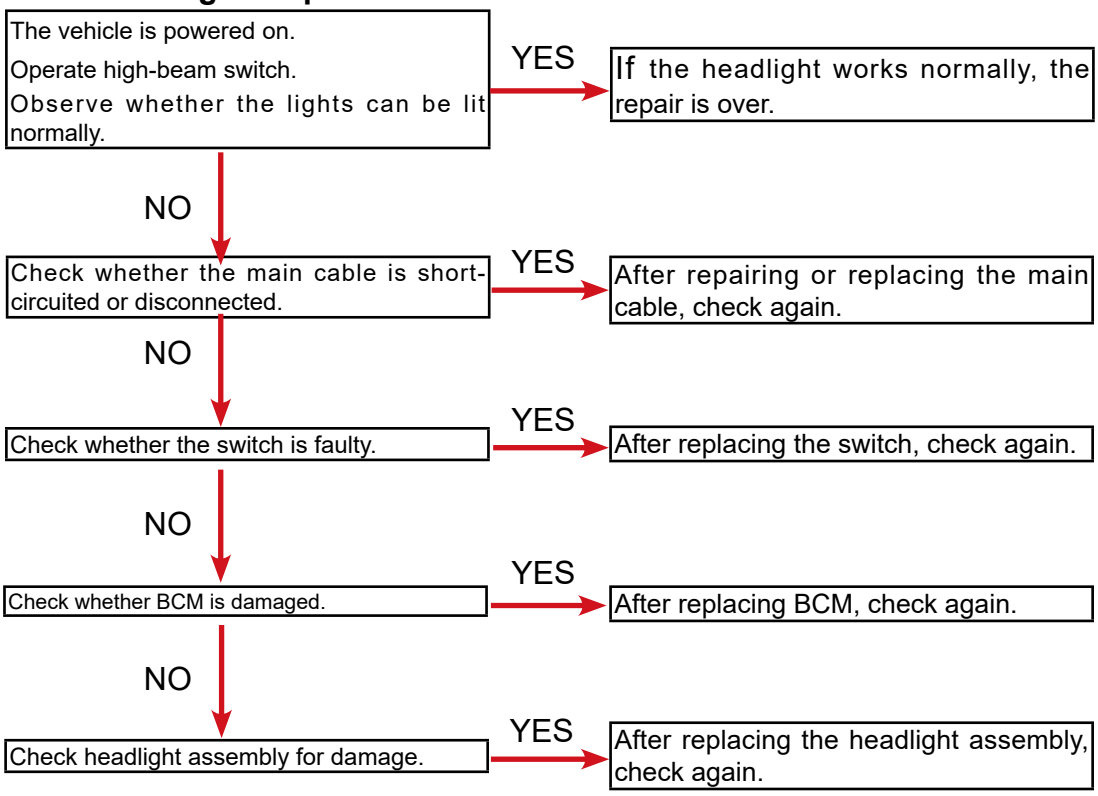

12.2.3 Taillight Inspection

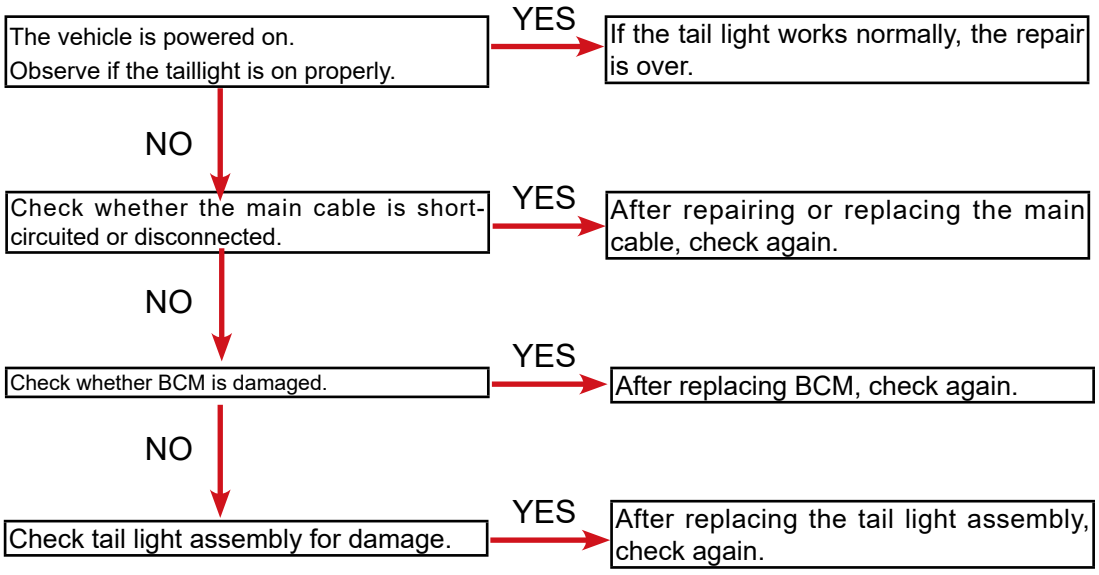

© CFMOTO Powersports, Inc. This manual is subject to all applicable copyright laws. Reproduction or duplication in any form, whole or in part, is strictly prohibited.

12.2.4 Brake Light Inspection

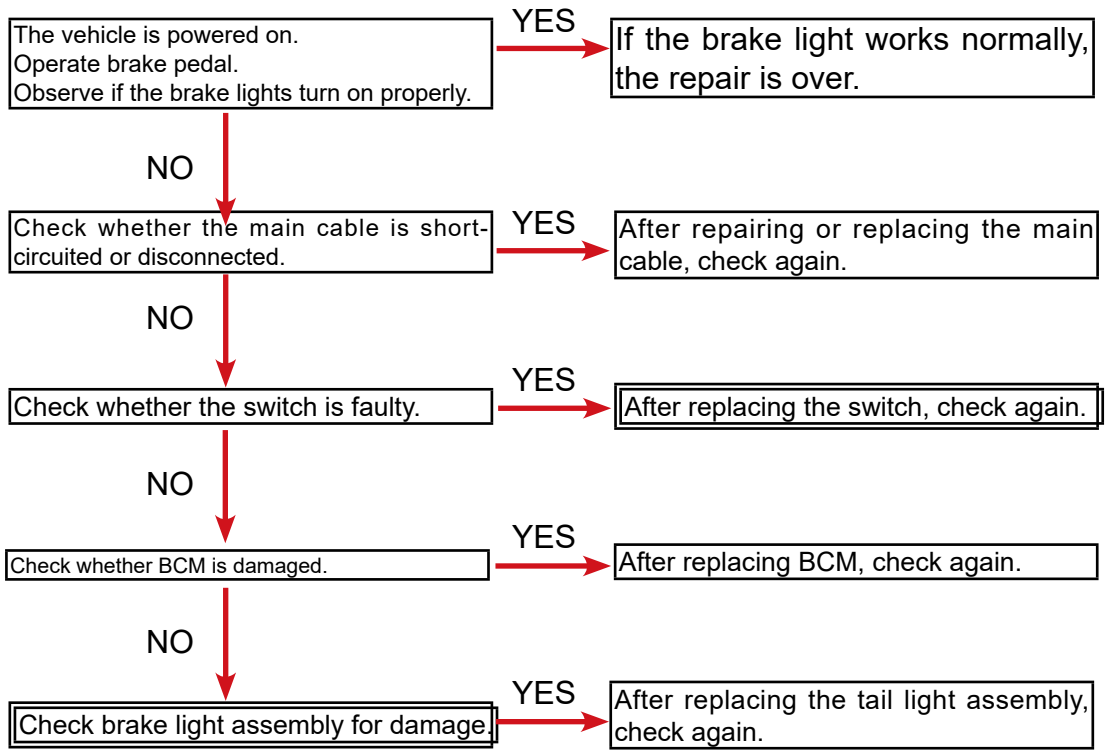

12.2.5 Turn Light Inspection

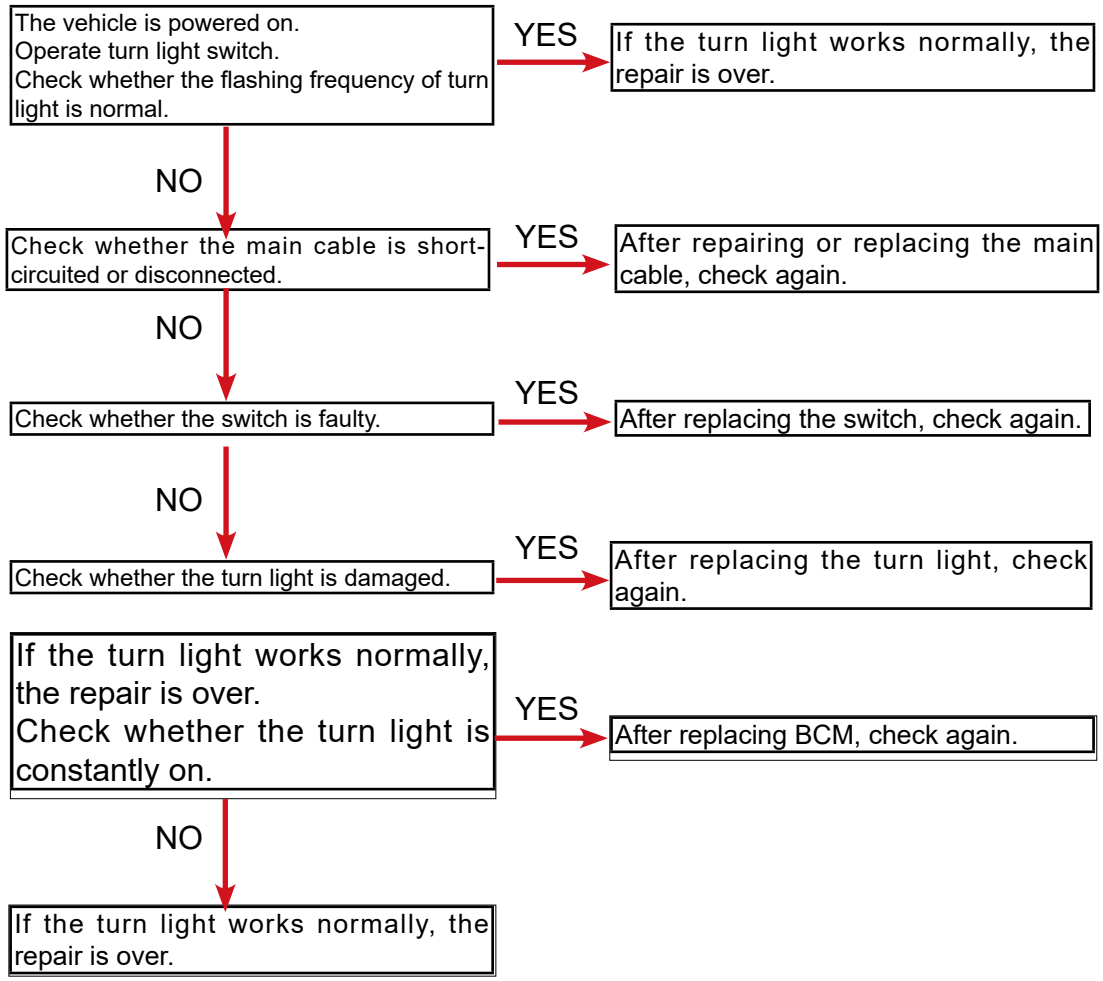

© CFMOTO Powersports, Inc. This manual is subject to all applicable copyright laws. Reproduction or duplication in any form, whole or in part, is strictly prohibited.

12.3 Fuse and Relay Box

12.3.1 Fuse/Relay Guide

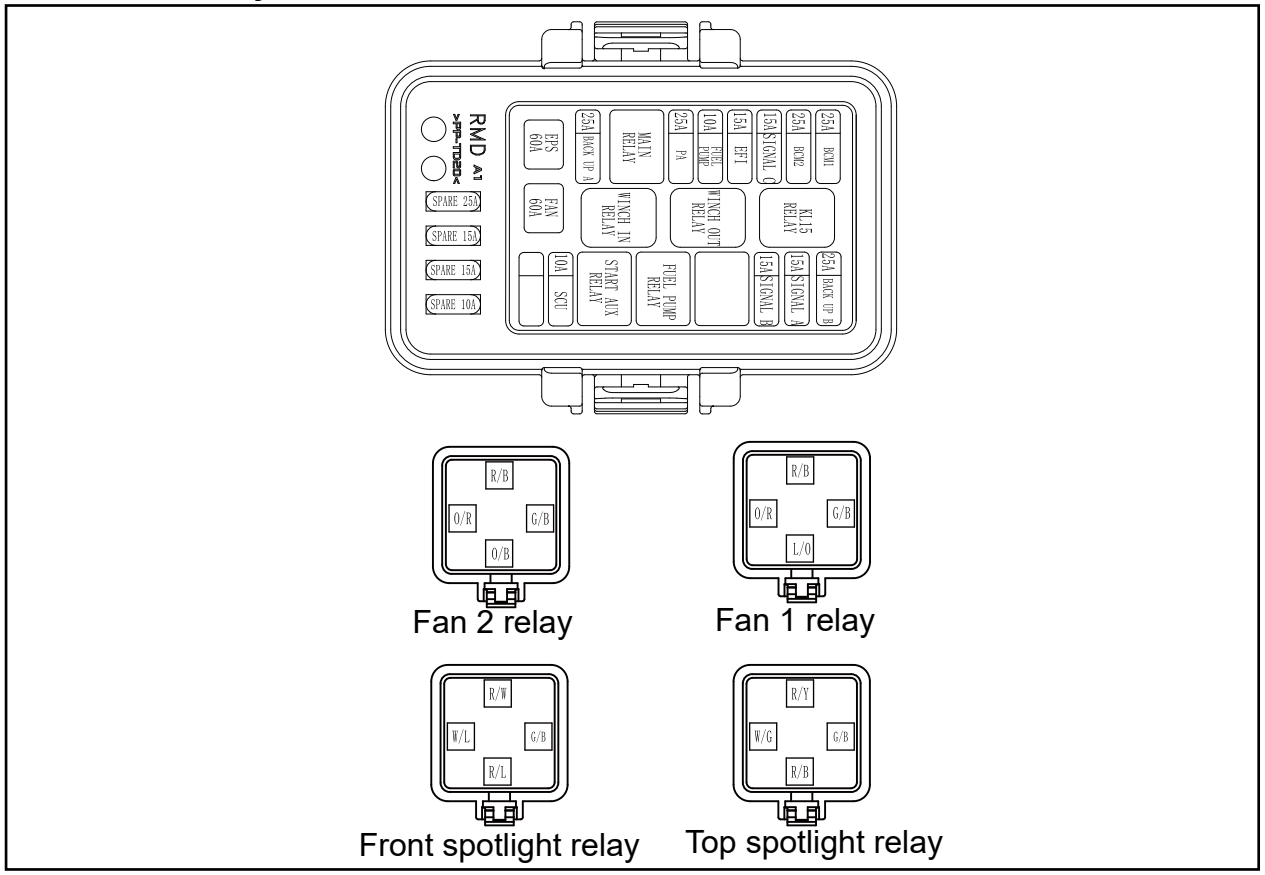

12.3.2 Fuse and Relay Box (1)

Remove service cover 1.

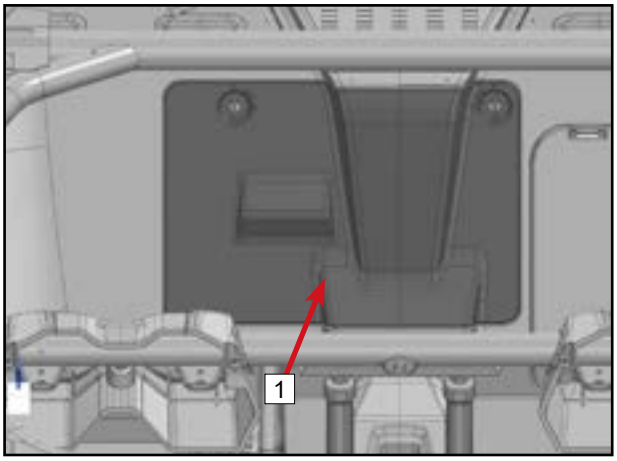

Fuse/Relay box and cooling fan relays 2.

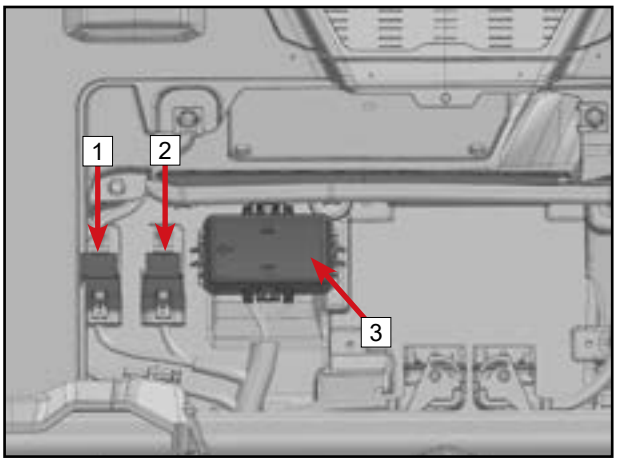

NOTE:
Replace fuses with the specified rating. For the fuse rating, refer to the fuse specification portion of the wire diagram. If a newly replaced fuse blows again shortly after replacement, there may be a fault in the electrical system, requiring repair.

Installing a fuse with a rating other than specified, or using a non-genuine fuse, may overload the vehicle's electrical circuit, resulting in excessive discharge of the battery, overheating of the wiring harness, and damage to the vehicle's electrical system.

© CFMOTO Powersports, Inc. This manual is subject to all applicable copyright laws. Reproduction or duplication in any form, whole or in part, is strictly prohibited.

12.3.3 Fuses and Relays (2)

Remove the front access panel (see chapter 06 for details).

Front Spotlight Fuse 1.

Top Spotlight Fuse 2.

Front Spotlight Relay 3.

Top Spotlight Relay 4.

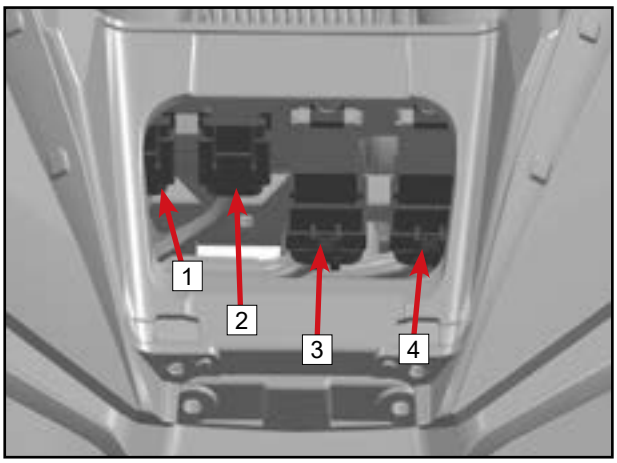

NOTE:

Replace fuses with the specified rating. For the fuse rating, refer to the fuse specification portion of the wire diagram. If a newly replaced fuse blows again shortly after replacement, there may be a fault in the electrical system, requiring repair.

Installing a fuse with a rating other than specified, or using a non-genuine fuse, may overload the vehicle's electrical circuit, resulting in excessive discharge of the battery, overheating of the wiring harness, and damage to the vehicle's electrical system.

© CFMOTO Powersports, Inc. This manual is subject to all applicable copyright laws. Reproduction or duplication in any form, whole or in part, is strictly prohbited.

12.4 Switch System

12.4.1 Switch Position Diagram

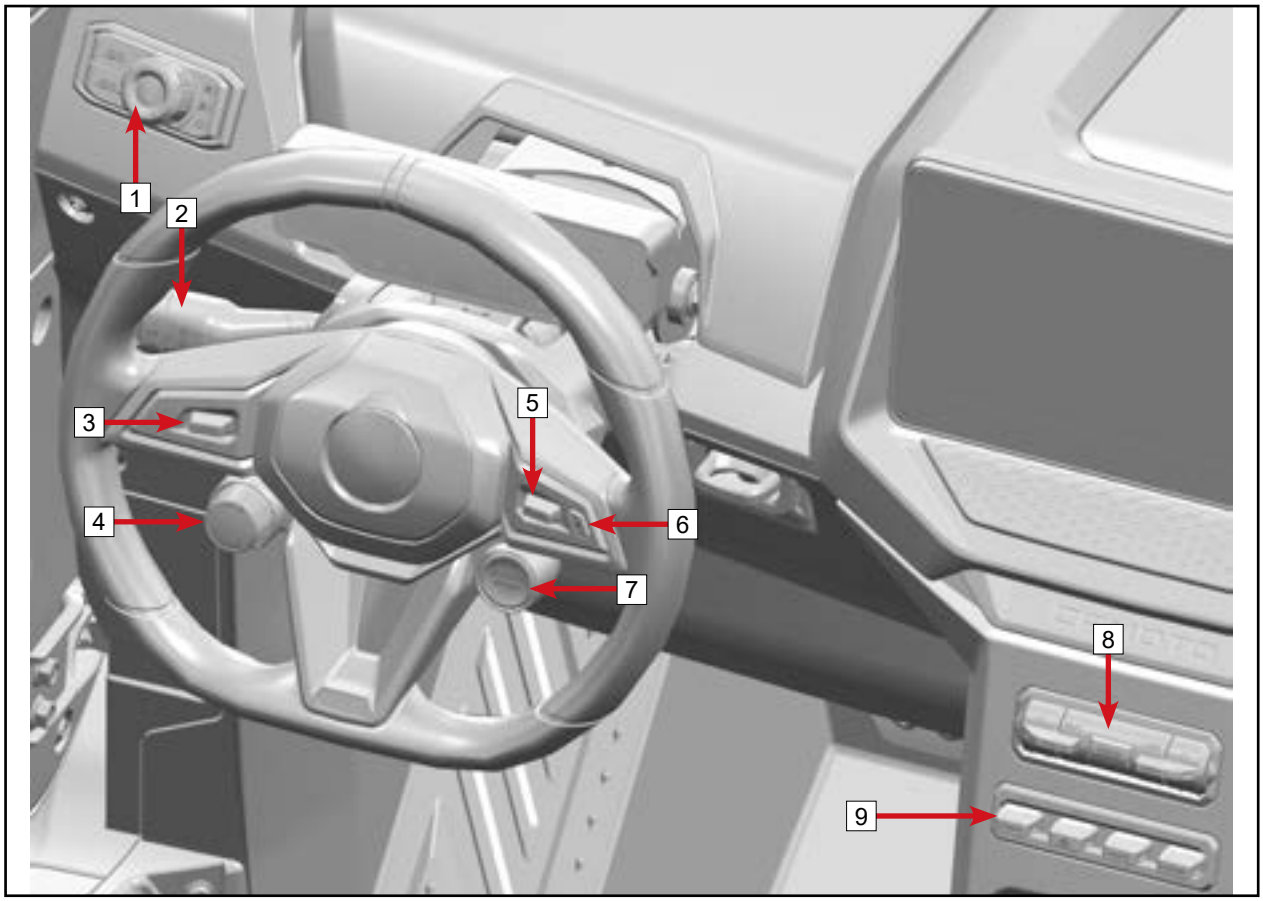

No.	Name	No.	Name	No.	Name
1	Light dimmer switch AUX Light 1 / 2	2	Combination switch group (turning, horn)	3	Volume adjustment switch
4	MODE switch	5	Suspension control switch	6	Voice Recognition (VR) switch
7	One-touch start/stop switch	8	2WD/4WD switch	9	Auxiliary function switches

© CFMOTO Powersports, Inc. This manual is subject to all applicable copyright laws. Reproduction or duplication in any form, whole or in part, is strictly prohbited.

12.4.2 Switch Inspection and Testing

1. Check whether the appearance of the switch is damaged, operate it, and observe if the switch is stuck or does not rebound.
2. Operate each switch to test whether the components controlled by the switch can function normally.
3. If it appears that after operating the switch, the controlled components do not work, but there is no sticking or non-rebounding phenomenon, disconnect the main cable connector connected to the switch, check the continuity of the switch and check the conductivity between the main cable and the terminals connected to the switch (see electrical schematic diagram).

12.4.2.1 Dimmer Switch

6-PIN Switch

Color / Function	1	2	3	4	5	6
					●	●
	●	●	●		●	●
	●	●		●	●	●

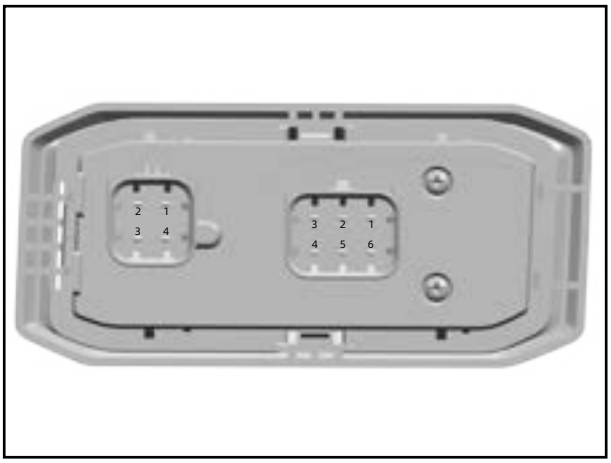

4-PIN Switch

Color / Function	1	2	3	4
AUX LIGHT1	●	●		●
AUX LIGHT2	●		●	●

© CFMOTO Powersports, Inc. This manual is subject to all applicable copyright laws. Reproduction or duplication in any form, whole or in part, is strictly prohbited.

12.4.2.2 Function Switch

Winch Switch						
Color / Function	1	2	3	4	5	6
▲	●	●				
Winch					●	●
▼		●	●			



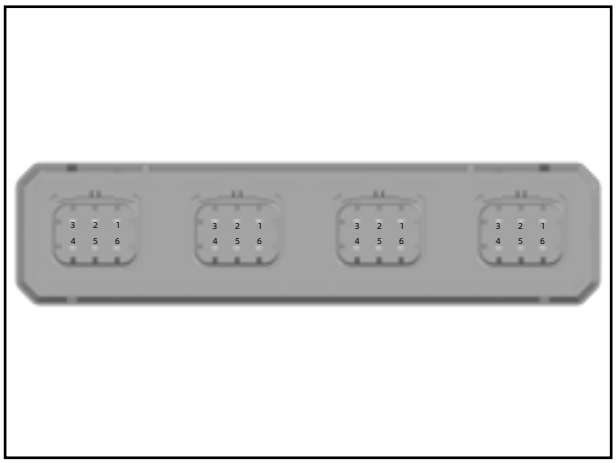

Hazard Switch (Optional)						
Color / Function	1	2	3	4	5	6
▲	●	●				
⚠					●	●
▼	●	●				



AUX 1 Switch						
Color / Function	1	2	3	4	5	6
▲	●	●				
AUX1					●	●
▼		●	●			



AUX 2 Switch						
Color / Function	1	2	3	4	5	6
▲	●	●				
AUX2					●	●
▼	●	●				



12.4.2.3 2/4WD Switch

6-PIN Switch						
Color / Function	1	2	3	4	5	6
2×4	●	●				●
4×4	●		●			●
LOCK	●			●		●
UNLOCK	●	●	●			



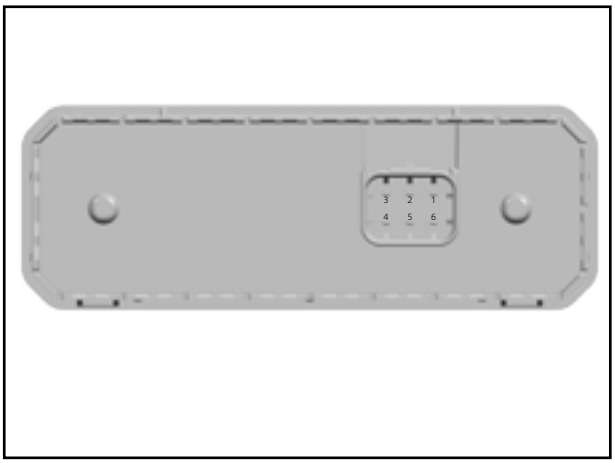

12.4.2.4 Mode Switch

Mode Switch Diagram				
Color / Function	B	SB	LG	R
Mode1				●
Mode2	●	●	●	●
Mode3	●		●	●



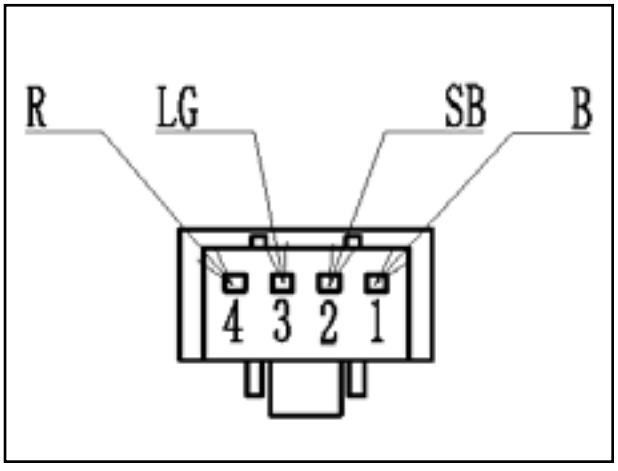

© CFMOTO Powersports, Inc. This manual is subject to all applicable copyright laws. Reproduction or duplication in any form, whole or in part, is strictly prohibited.

12.4.2.5 Keyless Start Switch

Keyless Start Switch Diagram					
Pin / Function	G	O	B	Y	B/BR
ON	●	●	●	●	●
OFF	●	●	●		

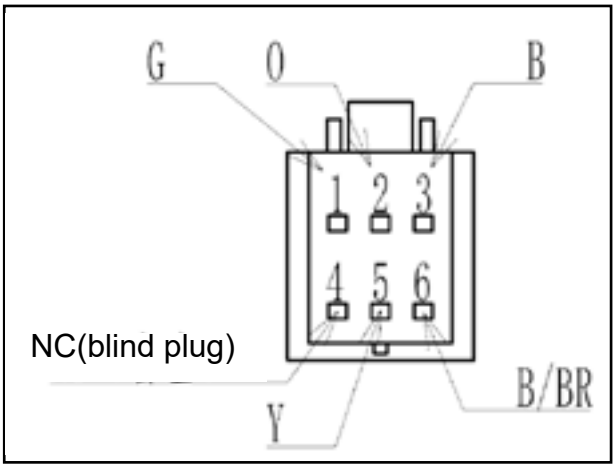

12.4.2.6 Electronic Shock Absorber Switch

E-shock Absorber Switch					
Color / Function	B	W	P	GR	R
▲	●	●			●
SUSP	●				●
▼	●		●		●
	●			●	●

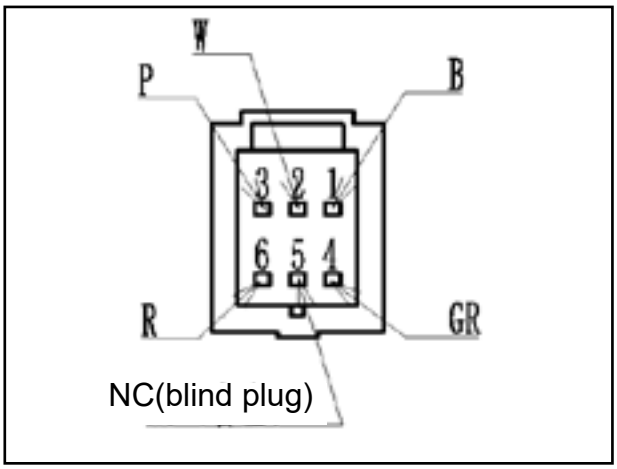

12.4.2.7 Volume Switch

Volume Switch Diagram				
Color / Function	B	V	L	R
▲	●	●		●
VOL	●			●
▼	●		●	●

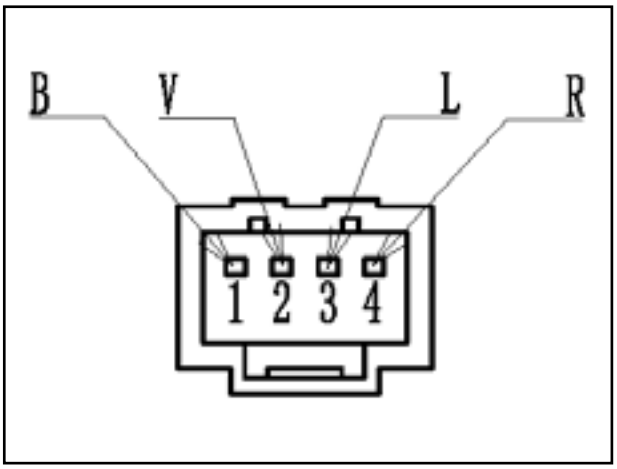

© CFMOTO Powersports, Inc. This manual is subject to all applicable copyright laws. Reproduction or duplication in any form, whole or in part, is strictly prohbited.

12.5.8 Front Gear Case Electrical System

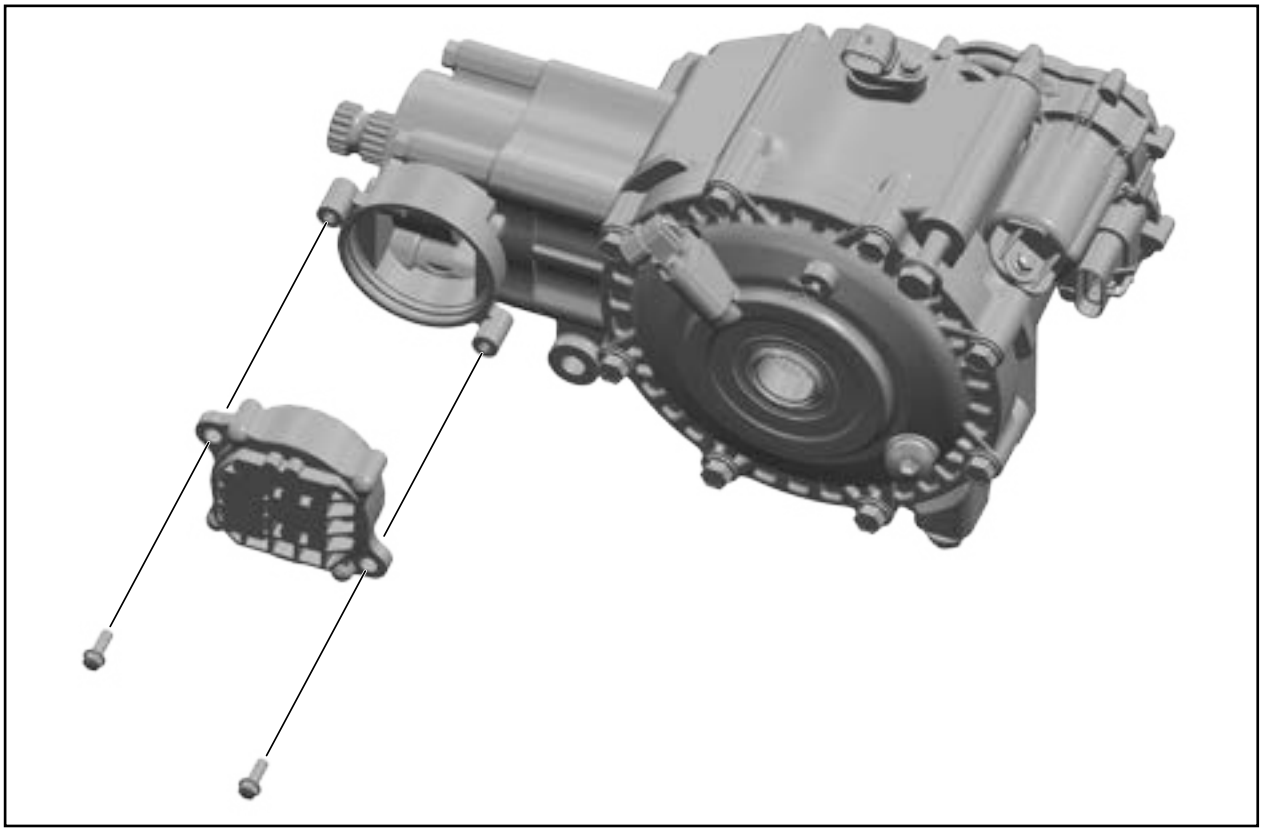

No.	Name
1	Electrical front gear case motor

12.4.3.1 Front Gear Motor Input Voltage Check

Disconnect front gear motor connector.

Set a multimeter to DC voltage.

With the vehicle powered on, check whether the wiring harness connection voltage is 12V.

The test method is shown in the image.

If the voltage is unstable or 0V is displayed, check the wiring harness and connector.

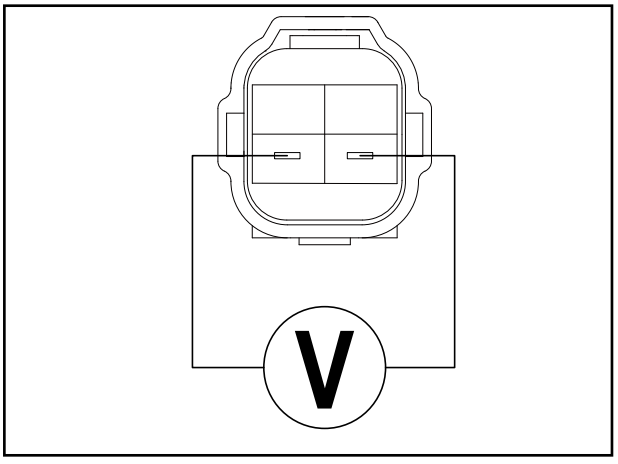

© CFMOTO Powersports, Inc. This manual is subject to all applicable copyright laws. Reproduction or duplication in any form, whole or in part, is strictly prohibited.

12.5 Charging System and Battery

12.5.1 Charging System Location Map

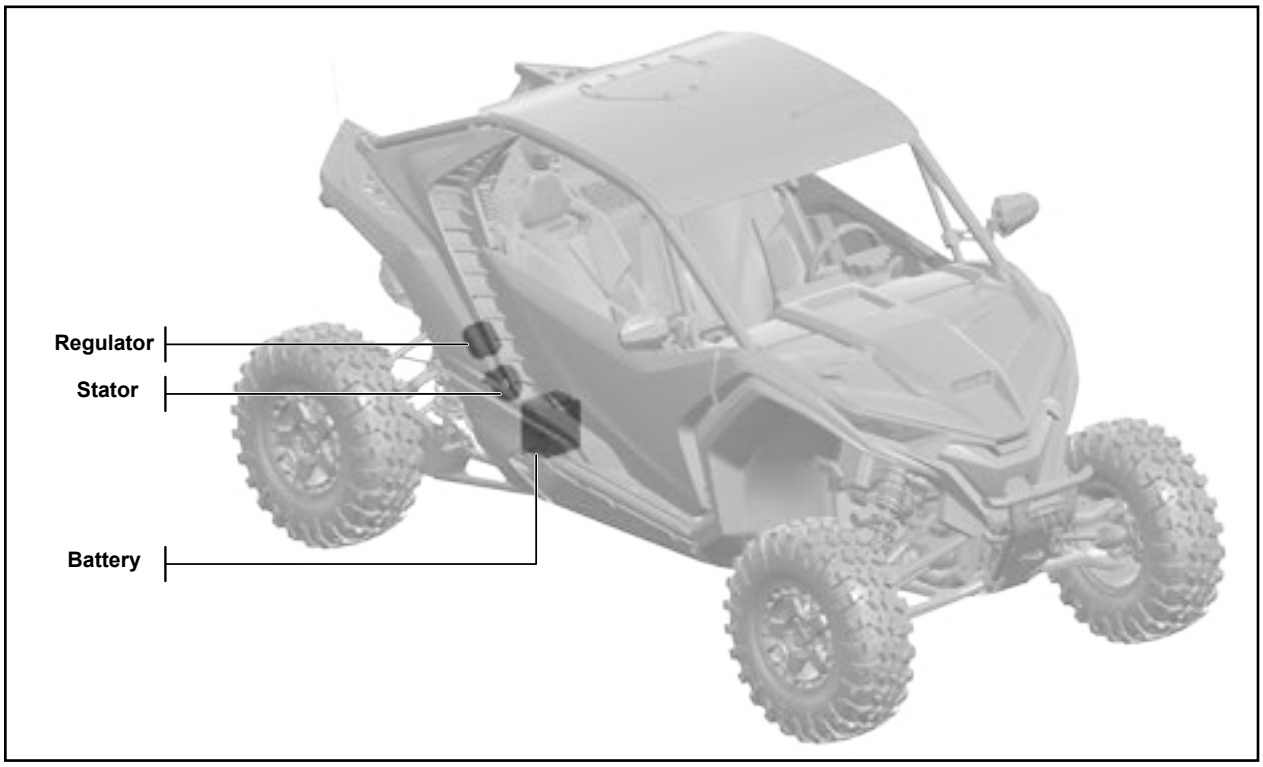

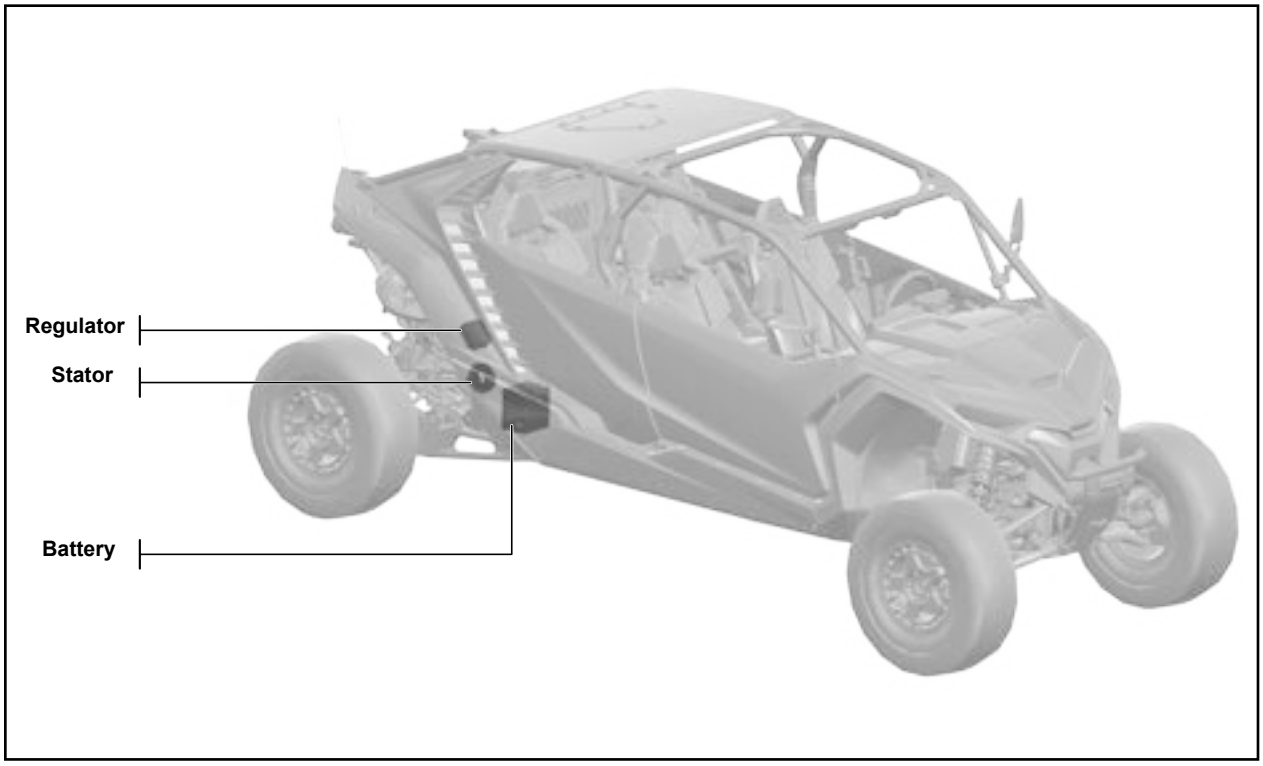

© CFMOTO Powersports, Inc. This manual is subject to all applicable copyright laws. Reproduction or duplication in any form, whole or in part, is strictly prohbited.

12.6 Charging System

12.6.1 Charging Circuit Diagram

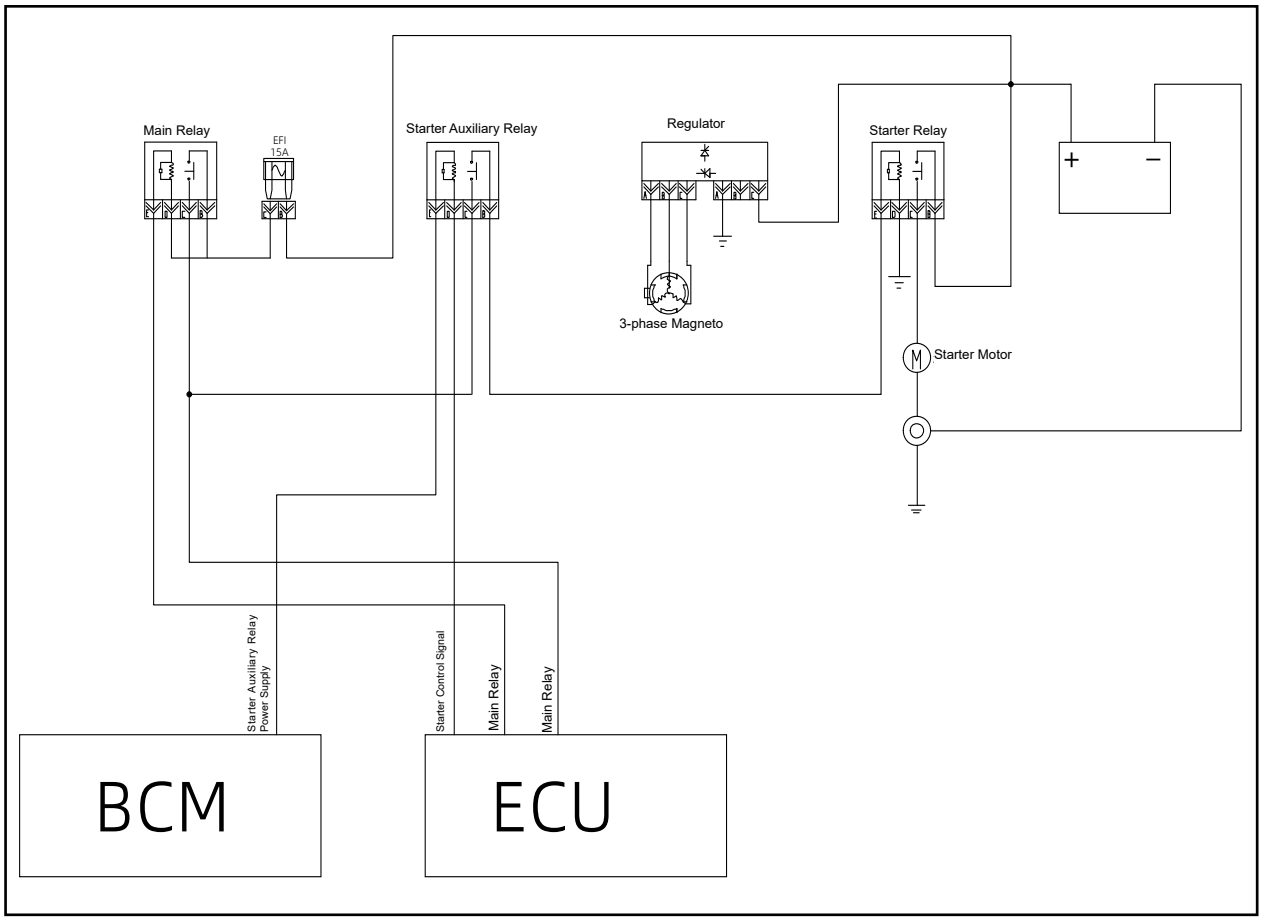

Precautions for removing and installing batteries

⚠WARNING

1. **Battery acid and battery gas can cause serious corrosion. Avoid contact with battery acid and battery gas.**
2. **Keep battery out of the reach of children.**
3. **When battery acid comes into contact with skin, rinse with plenty of water. If battery acid gets into eyes, rinse with water for at least 15 minutes and seek medical attention.**

NOTE

1. **Wear protective clothing, goggles, and keep the battery away from sparks and open flames. Charge only in a well ventilated area.**
2. **When connecting the battery, the positive and negative terminals of the battery should not be connected incorrectly. To remove the battery, first remove the negative wire to avoid damaging electronic components. This system uses negative grounding.**
3. **When engine is running, it is not allowed to remove battery cable.**
4. **Before welding on the vehicle, the positive and negative cables of the battery and the electronic control unit must be removed.**
5. **Do not use the method of piercing the wire jacket to detect electrical signal input and output of components.**
6. **Establish environmental protection awareness and properly dispose of waste generated during the maintenance or repair process.**

© CFMOTO Powersports, Inc. This manual is subject to all applicable copyright laws. Reproduction or duplication in any form, whole or in part, is strictly prohibited.

12.6.2 Battery

Removal

Remove the passenger seat (Z10-4 is right rear passenger seat).

Remove battery protection cover 1.

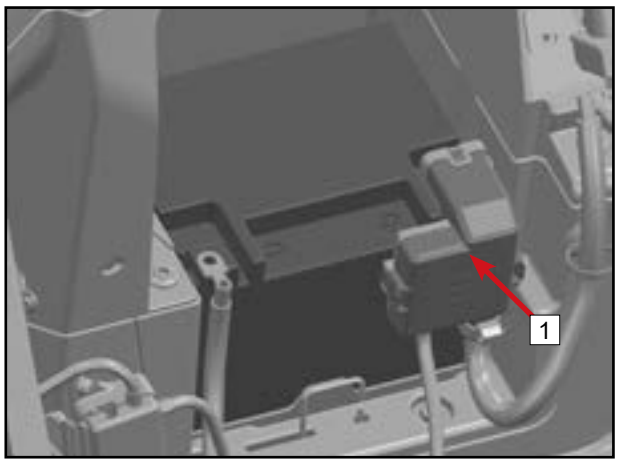

Remove the bolt and the negative cable of the battery 2.

Remove the bolt and the positive cable of the battery 3.

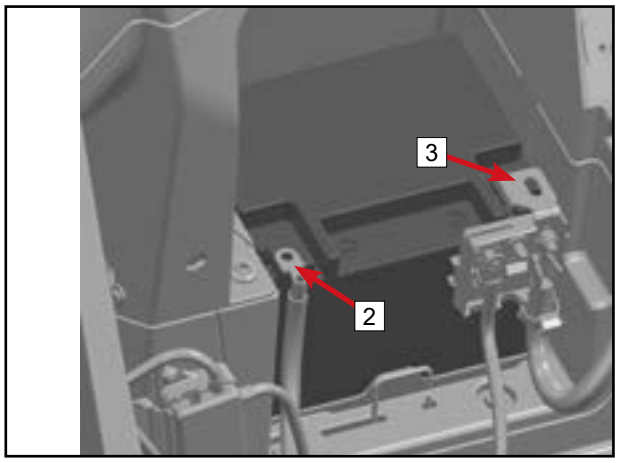

Remove battery 4.

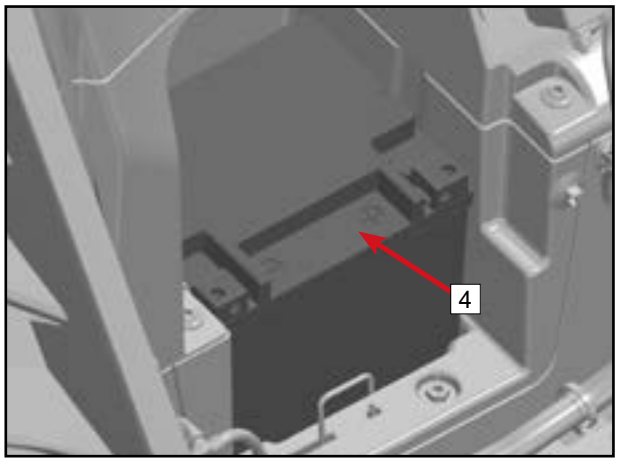

Installation

Reverse the removal procedures for installation.

© CFMOTO Powersports, Inc. This manual is subject to all applicable copyright laws. Reproduction or duplication in any form, whole or in part, is strictly prohbited.

12.6.3 Battery Current Draw Test

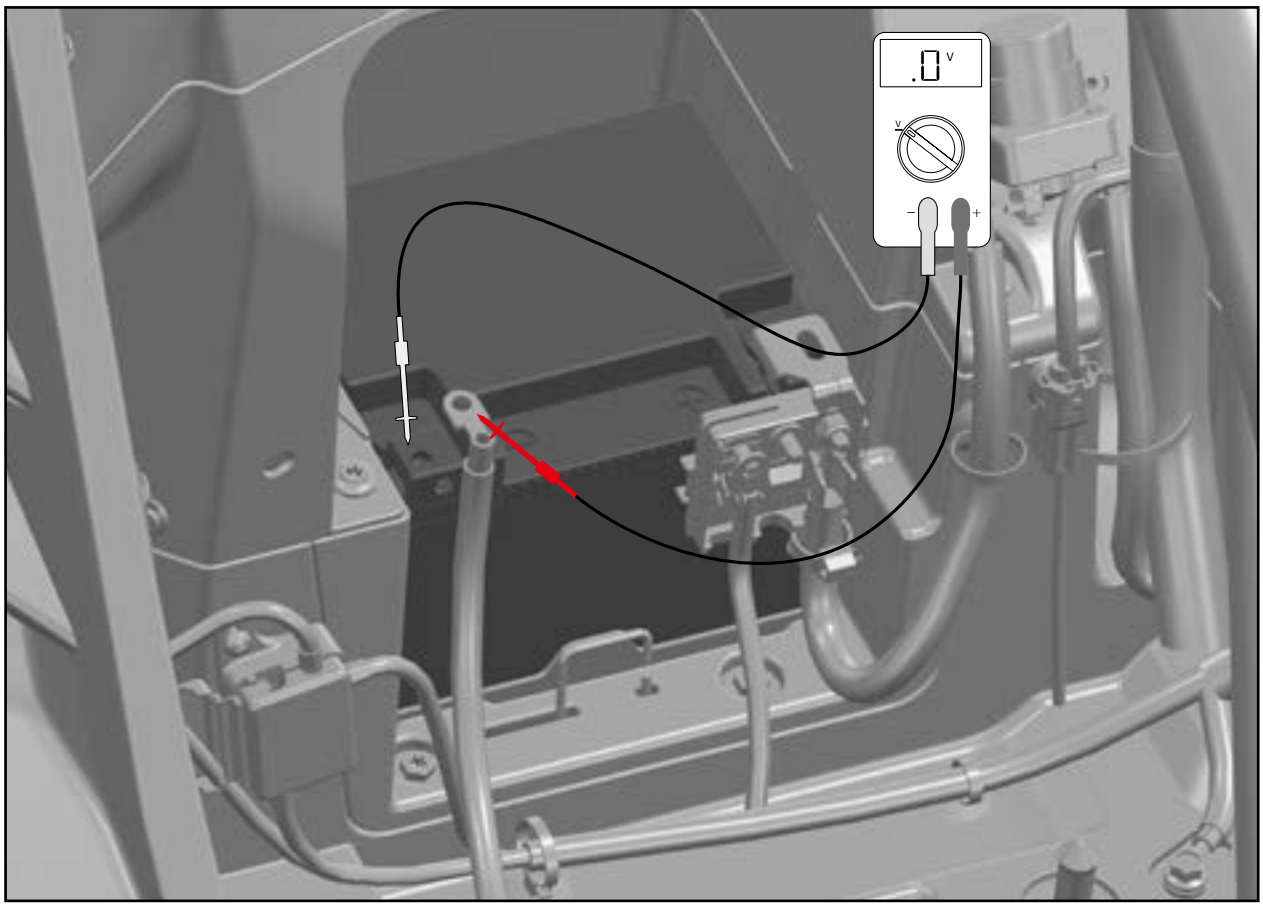

As shown in the image:
Allow to stand for 5 minutes or more with the power turned off. When using a multimeter to measure current, set it to a high setting and then reduce the range to the appropriate setting to prevent damage to the multimeter.

The maximum current draw should not exceed 5 mA.
For models equipped with T-BOX, it is necessary to disconnect the T-BOX connector first. A slight vibration caused by the vehicle being touched will cause the T-BOX to wake up, resulting in an increase in current draw to about 100mA for about 2 minutes, which will affect the measurement value.
If the leakage current exceeds the maximum range value, a circuit may be short-circuited.
Locate the short circuit by disconnecting electrical connections one by one and measuring the current.

NOTE
Do not energize the vehicle while measuring current. A sudden high current may damage the multimeter.

© CFMOTO Powersports, Inc. This manual is subject to all applicable copyright laws. Reproduction or duplication in any form, whole or in part, is strictly prohibited.

12.6.4 Regulator

Removal

Remove the connector [1].

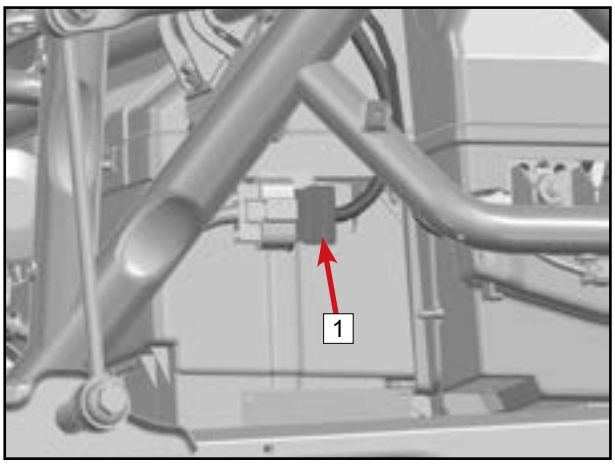

Remove bolt [2].
Remove wire harness [3].

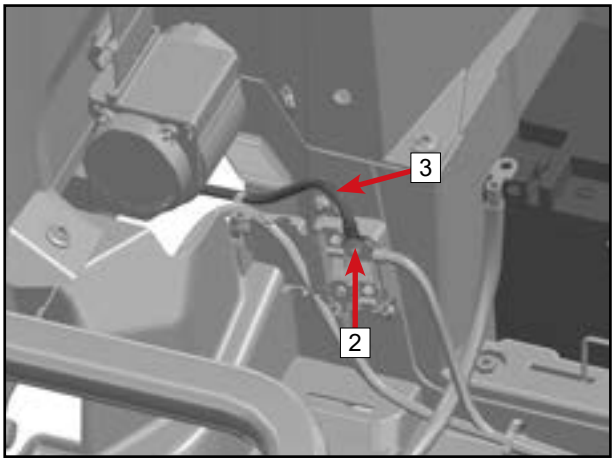

Remove bolt [4].
Remove wire harness [5].
Remove bolt [6].
Remove regulator [7].

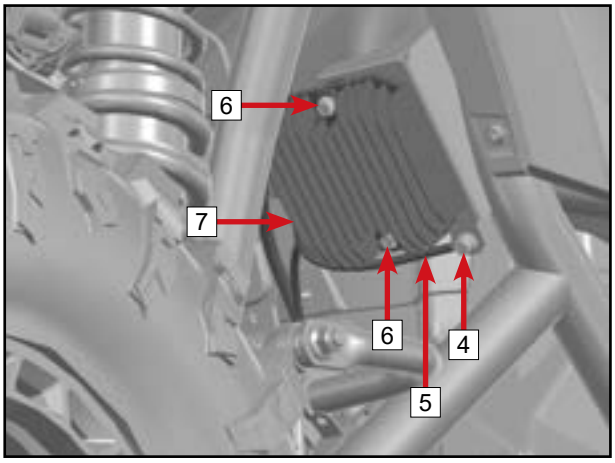

Installation

Reverse the removal procedures for installation.

© CFMOTO Powersports, Inc. This manual is subject to all applicable copyright laws. Reproduction or duplication in any form, whole or in part, is strictly prohbited.

12.6.5 Regulator Pin Definition

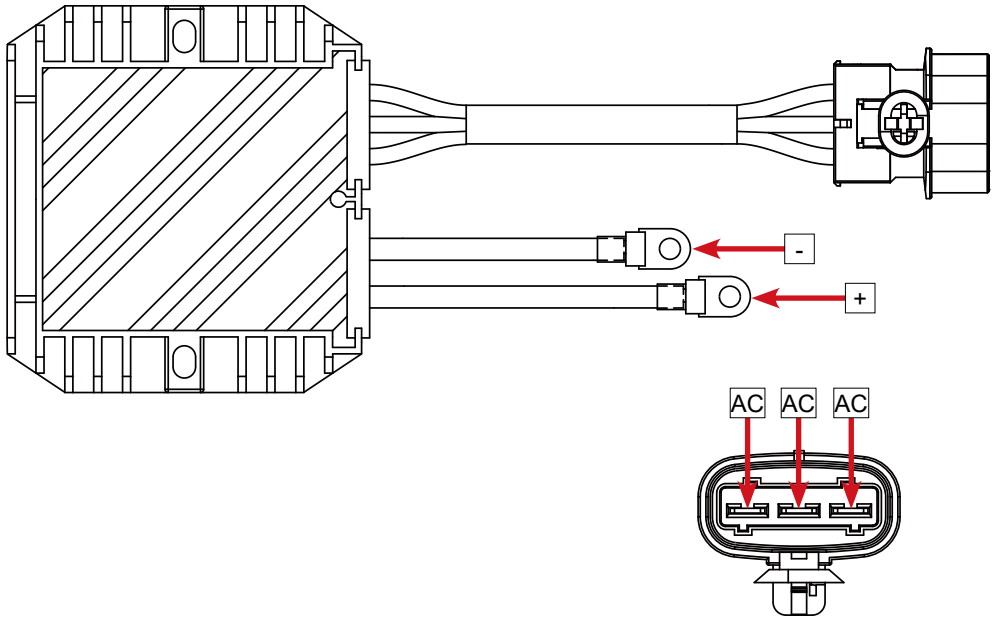

© CFMOTO Powersports, Inc. This manual is subject to all applicable copyright laws. Reproduction or duplication in any form, whole or in part, is strictly prohibited.

12.6.6 Regulator Charging Voltage Inspection

The battery must function properly and be fully charged.
Start the vehicle for voltage measurement.
Measure point positive (+), and measure point GND (-).

Charging Voltage	
5000 Rpm	13.2 ~ 14.8V

If the charging voltage is abnormal, check the stator or regulator.

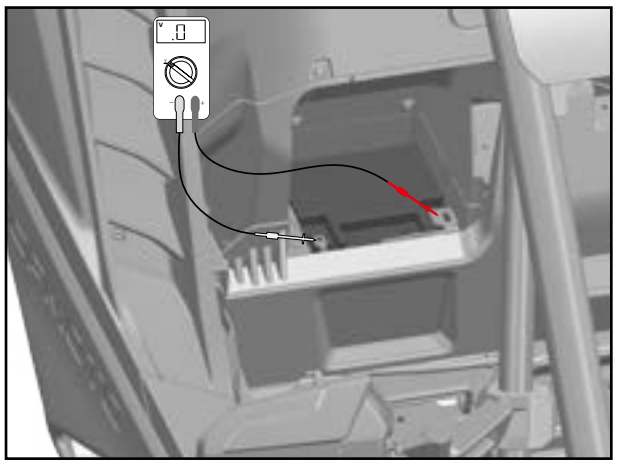

12.6.7 Magneto Stator

Removal:

Remove magneto cover assembly (See Chapter 05)
Remove wire harness fixing plate.
Remove the stator assembly as shown in the diagram.

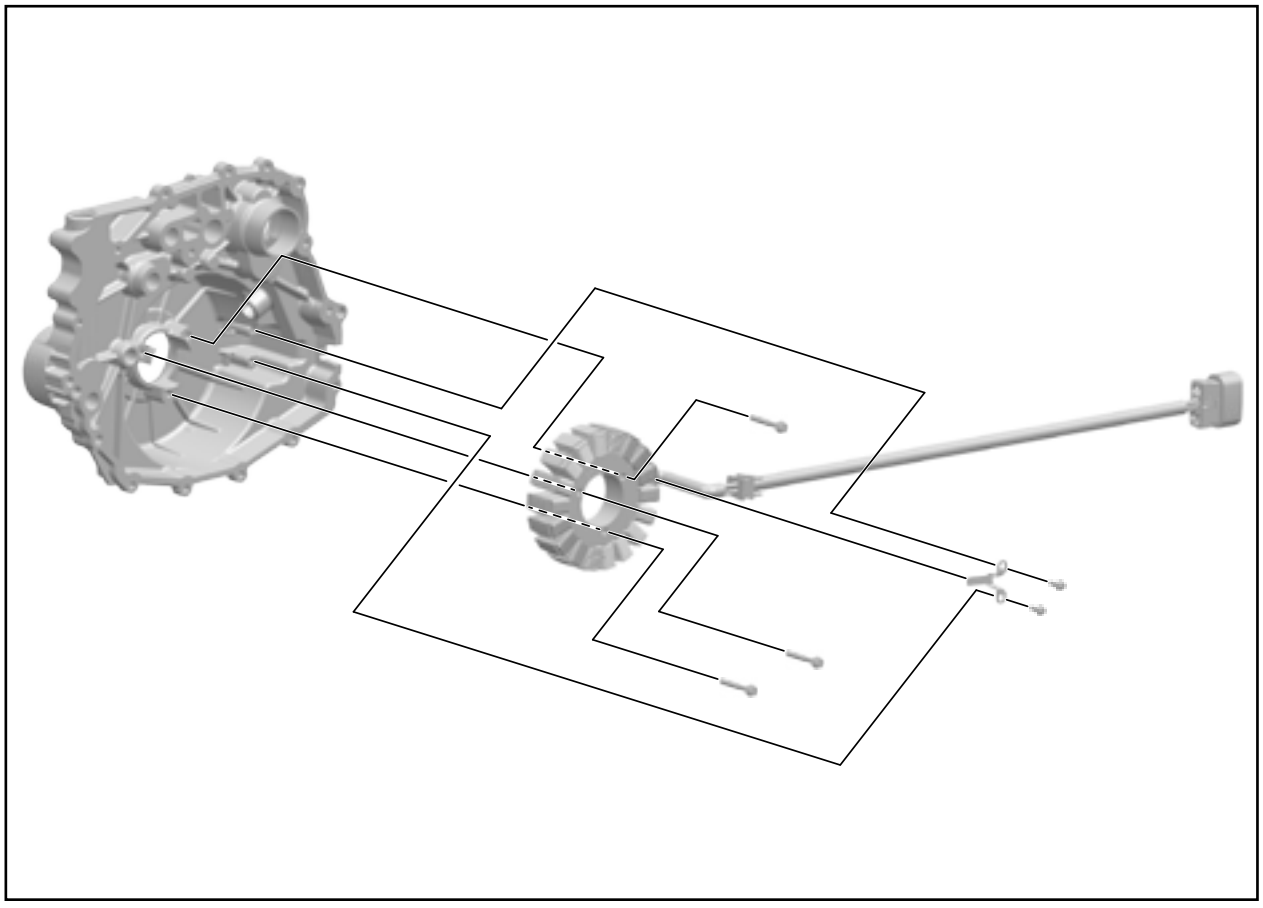

© CFMOTO Powersports, Inc. This manual is subject to all applicable copyright laws. Reproduction or duplication in any form, whole or in part, is strictly prohbited.

12.6.7.1 Magneto Coil Path Check
Measure the path between the pins of the stator coil of a three-phase magneto.
If there is no continuity, replace with a new part.

Set the multimeter to continuity beep.
Measure the path between pins.

The test method is shown in the images.

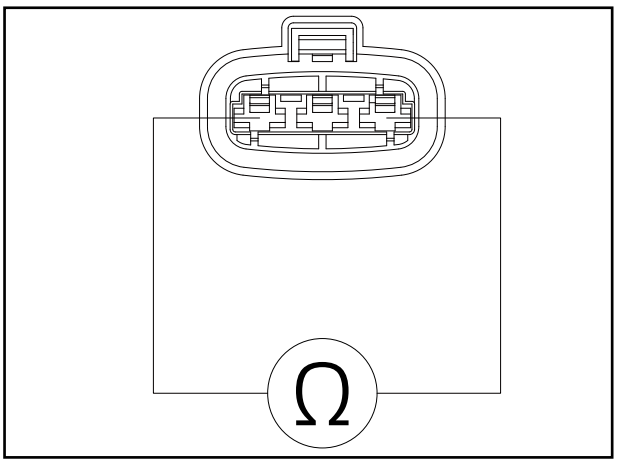

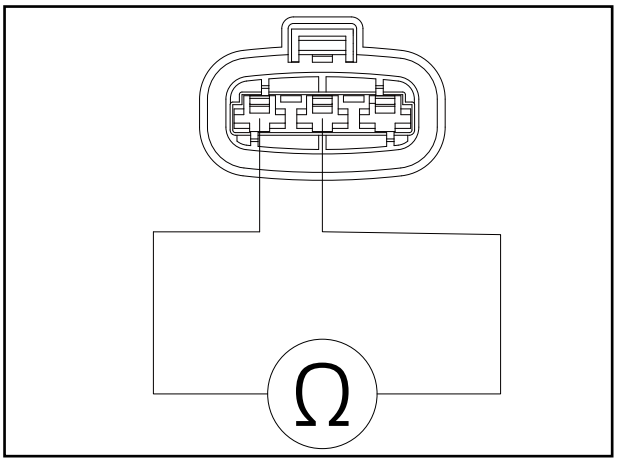

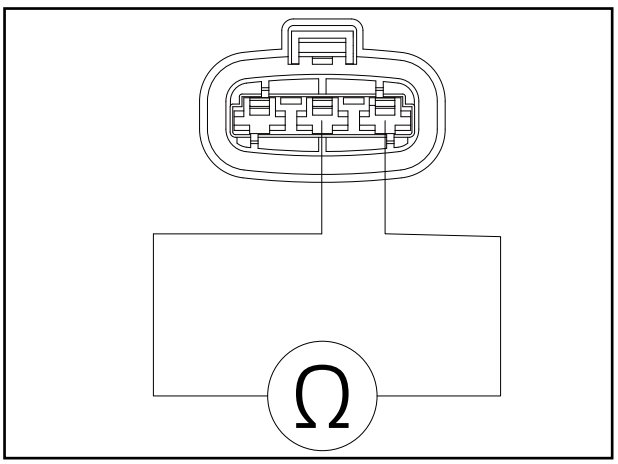

© CFMOTO Powersports, Inc. This manual is subject to all applicable copyright laws. Reproduction or duplication in any form, whole or in part, is strictly prohibited.

12.7 Electric Horn (Select Markets)

Removal

Disconnect connector 1.

Remove bolt 2.

Remove electric horn 3.

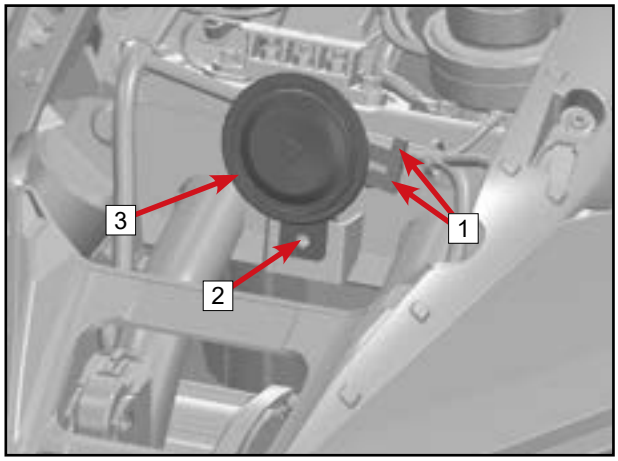

Installation

Reverse the removal procedures for installation.

Electric Horn Inspection

Remove electric horn

Connect the 12V battery as shown in the picture.

Check whether the electric horn sound is normal.

If the electric horn is working properly, check the harness end or the electric horn switch.

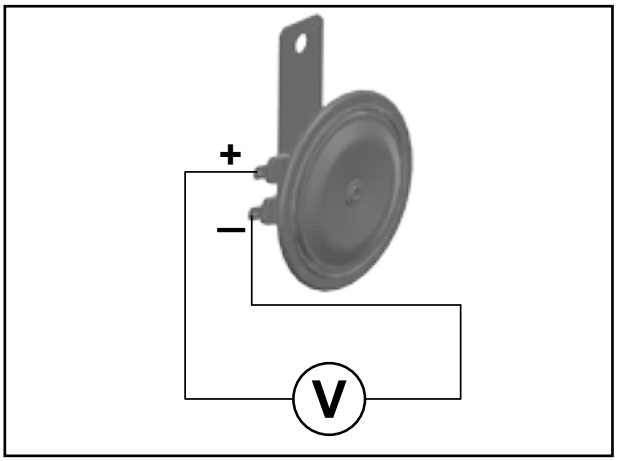



If the electric horn sound is not functioning or the sound is abnormal, replace it with a new one.

© CFMOTO Powersports, Inc. This manual is subject to all applicable copyright laws. Reproduction or duplication in any form, whole or in part, is strictly prohbited.

12.8 Starting System

12.8.1 Starting System Location Map

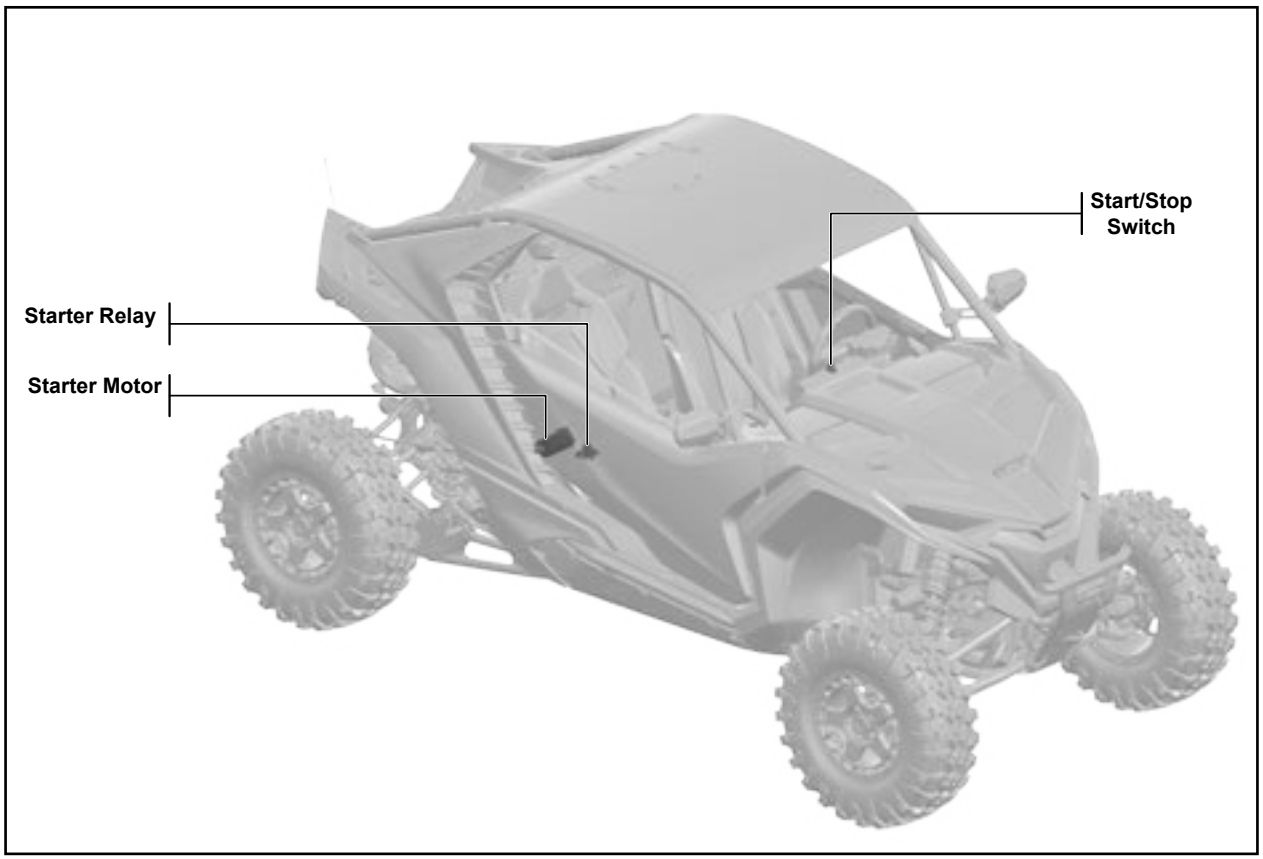

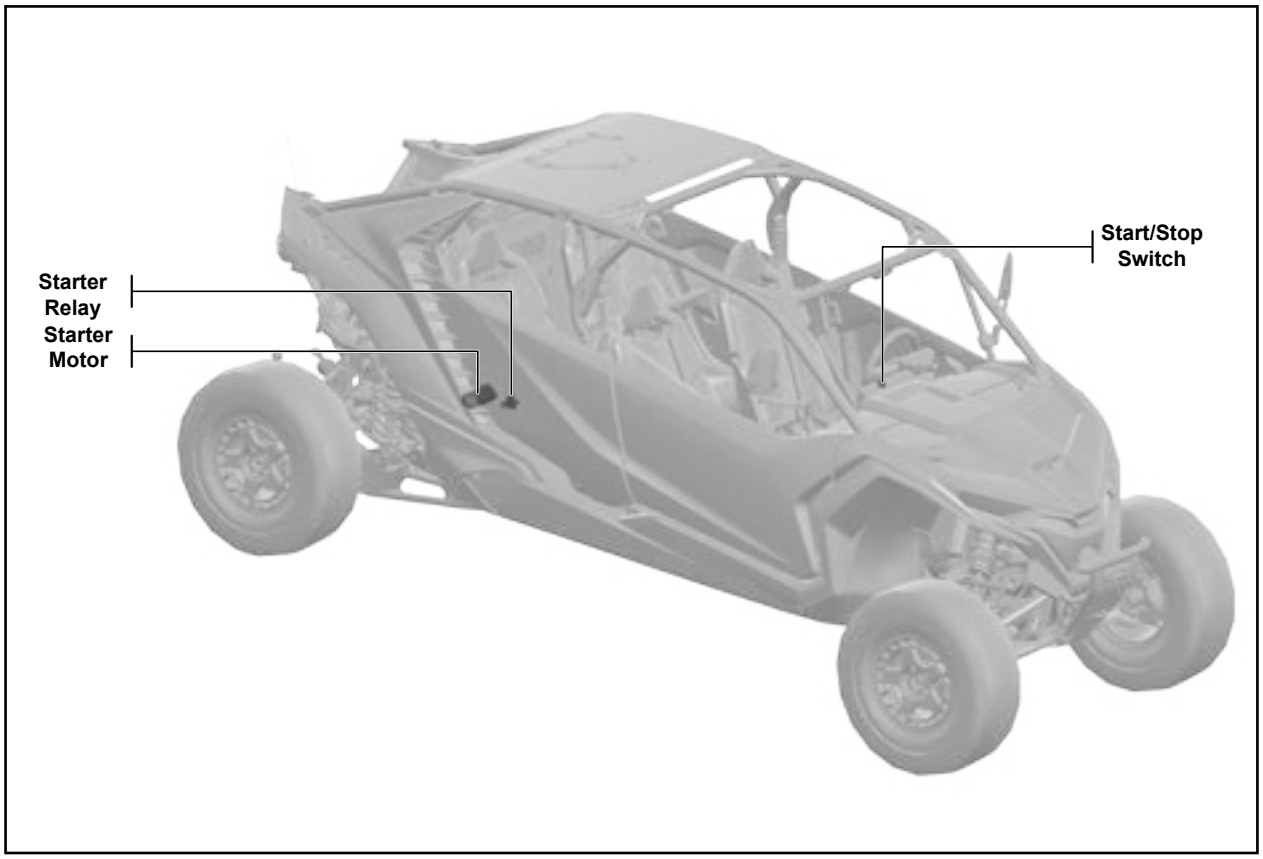

© CFMOTO Powersports, Inc. This manual is subject to all applicable copyright laws. Reproduction or duplication in any form, whole or in part, is strictly prohibited.

12.9 Starter Relay

12.9.1.1 Starter Relay Circuit Check

Set the multimeter to continuity beep.

Use a multimeter to check for continuity between the pins as shown.

If there is no beep, the starter relay may be damaged and should be replaced.

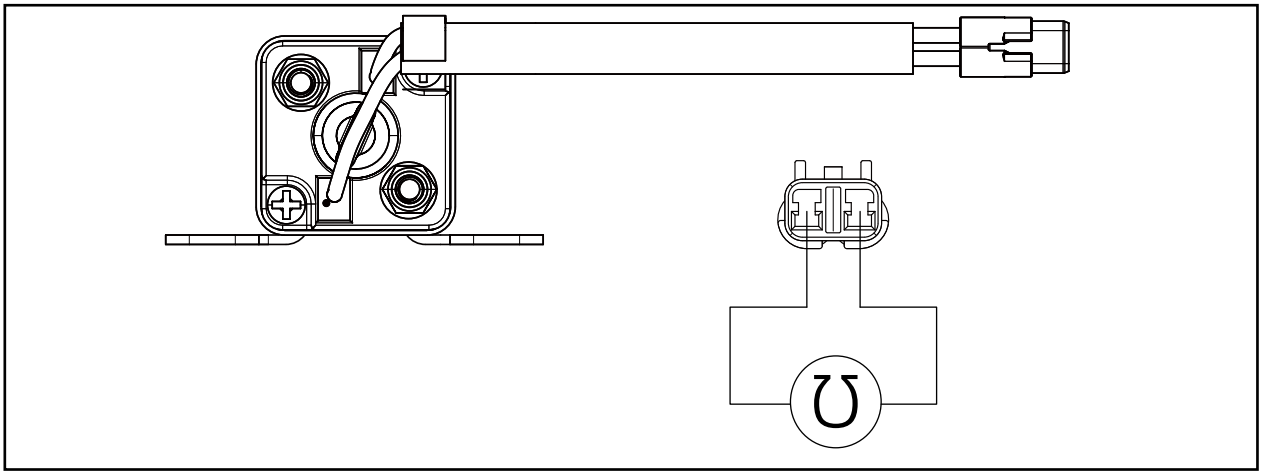

© CFMOTO Powersports, Inc. This manual is subject to all applicable copyright laws. Reproduction or duplication in any form, whole or in part, is strictly prohbited.

12.9.1 Starter Motor

Removal

Disconnect the positive and negative battery terminals.

Remove power cable 1.

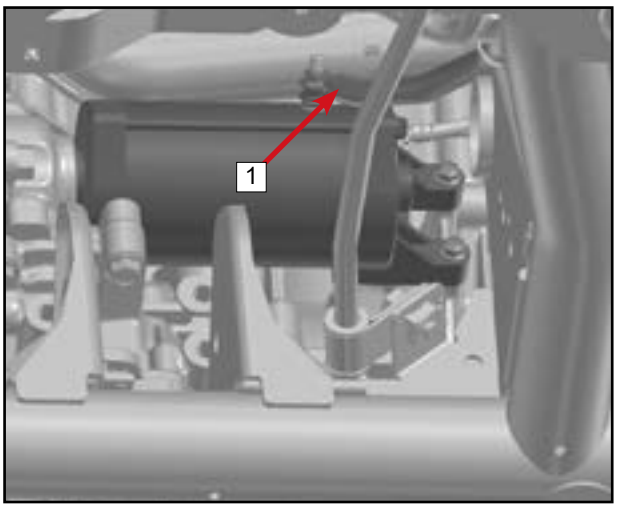

Remove bolts 2.

Remove starter motor 3.

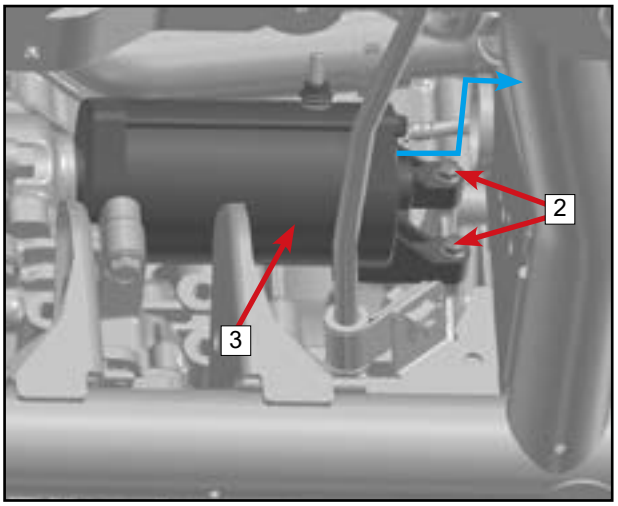

Installation

Reverse the removal procedures for installation.

12.9.1.1 Exterior Inspection of Starter Motor

Check for signs 1 of positional abrasion, if there are signs of damage, replace with a new part.

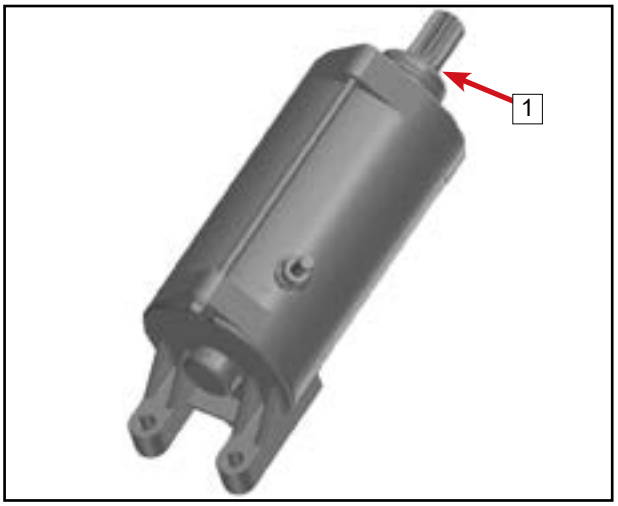

12.9.1.2 Starter Motor Operation Inspection

Press the ignition switch.

1. Observe whether the starter motor has any abnormal noise.

2. Observe whether the starter motor funtions properly.

If either of the above conditions occurs, check whether the wiring harness, starter relay, ignition switch is faulty. If the above parts are not faulty, the starter motor may be faulty, replace it..

© CFMOTO Powersports, Inc. This manual is subject to all applicable copyright laws. Reproduction or duplication in any form, whole or in part, is strictly prohbited.

12.9.2 Engine RPM Sensor

12.9.2.1 Operation Check

Check Power and Ground: Turn the power source on. Set the multimeter to DC voltage, then connect the black probe to the GND wire and the red probe to the power wire. The meter should read approximately 12V, confirming the sensor is powered.

Set the multimeter to the ohms position. Leave the multimeter black probe on ground and touch the red probe to the Signal wire.

Turn the engine clockwise and observe for a signal change generated by the Hall element on the multimeter or oscilloscope.

The oscilloscope method is shown in the image.

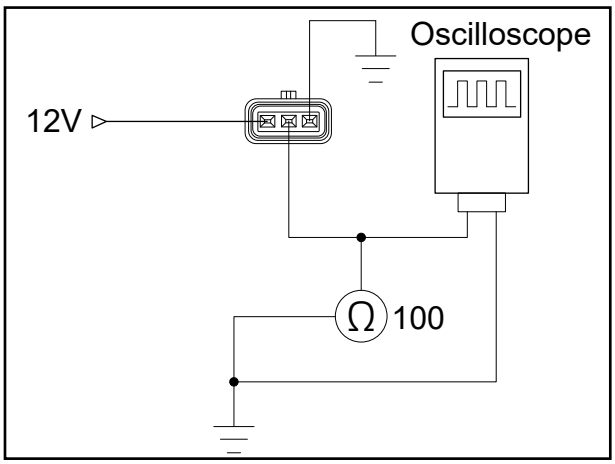

NOTE: An alternative method to check for sensor function is to set the dashboard gauge to the RPM function and watch for engine rpm while cranking the engine. If an rpm signal displays, the sensor is typically not at fault.

© CFMOTO Powersports, Inc. This manual is subject to all applicable copyright laws. Reproduction or duplication in any form, whole or in part, is strictly prohbited.

12.11 Fuel System /EVAP Fuel Evaporation System

12.11.1 Fuel System/EVPA Location Map

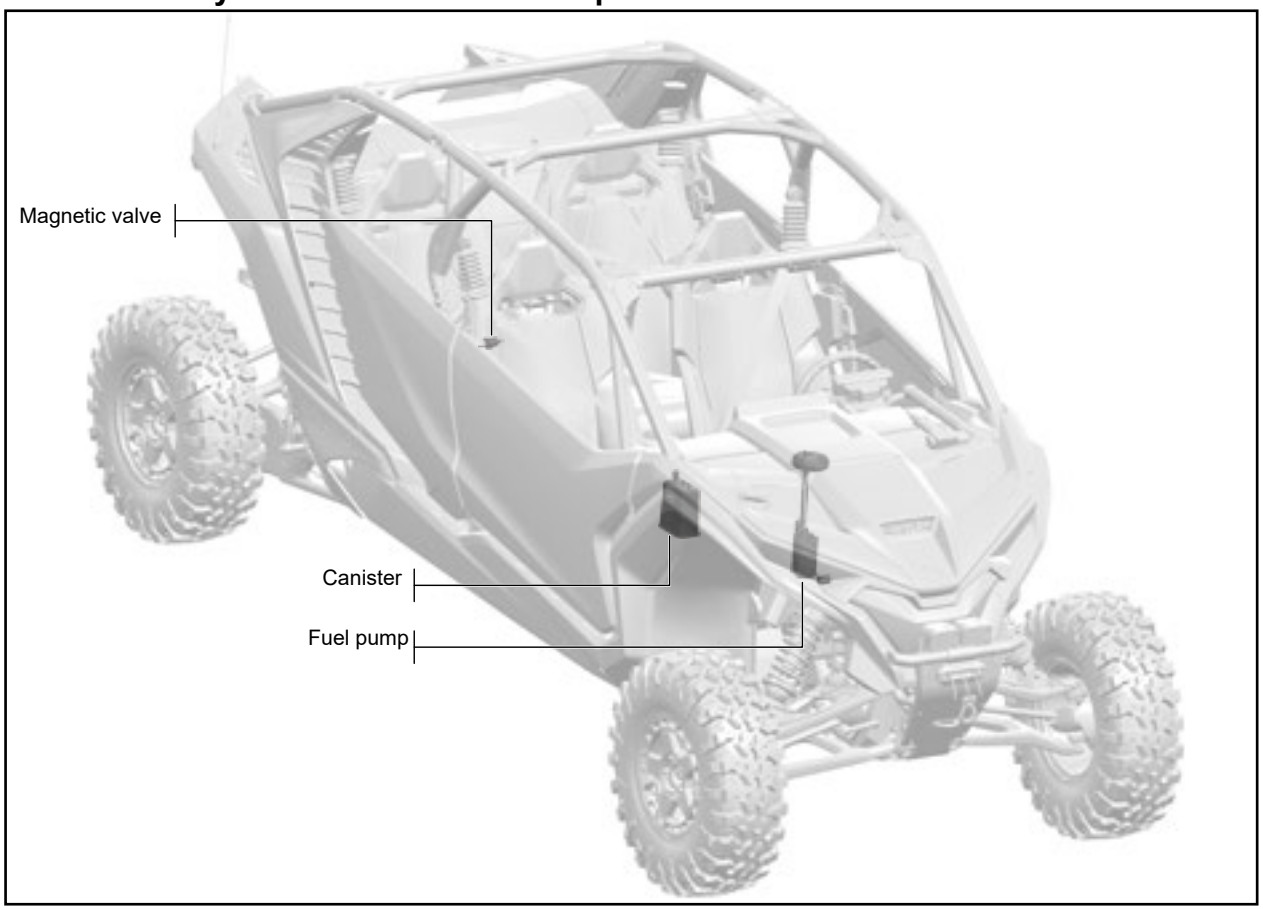

© CFMOTO Powersports, Inc. This manual is subject to all applicable copyright laws. Reproduction or duplication in any form, whole or in part, is strictly prohibited.

12.12 EVAP/Fuel Pump

12.12.1 EVAP System Overview

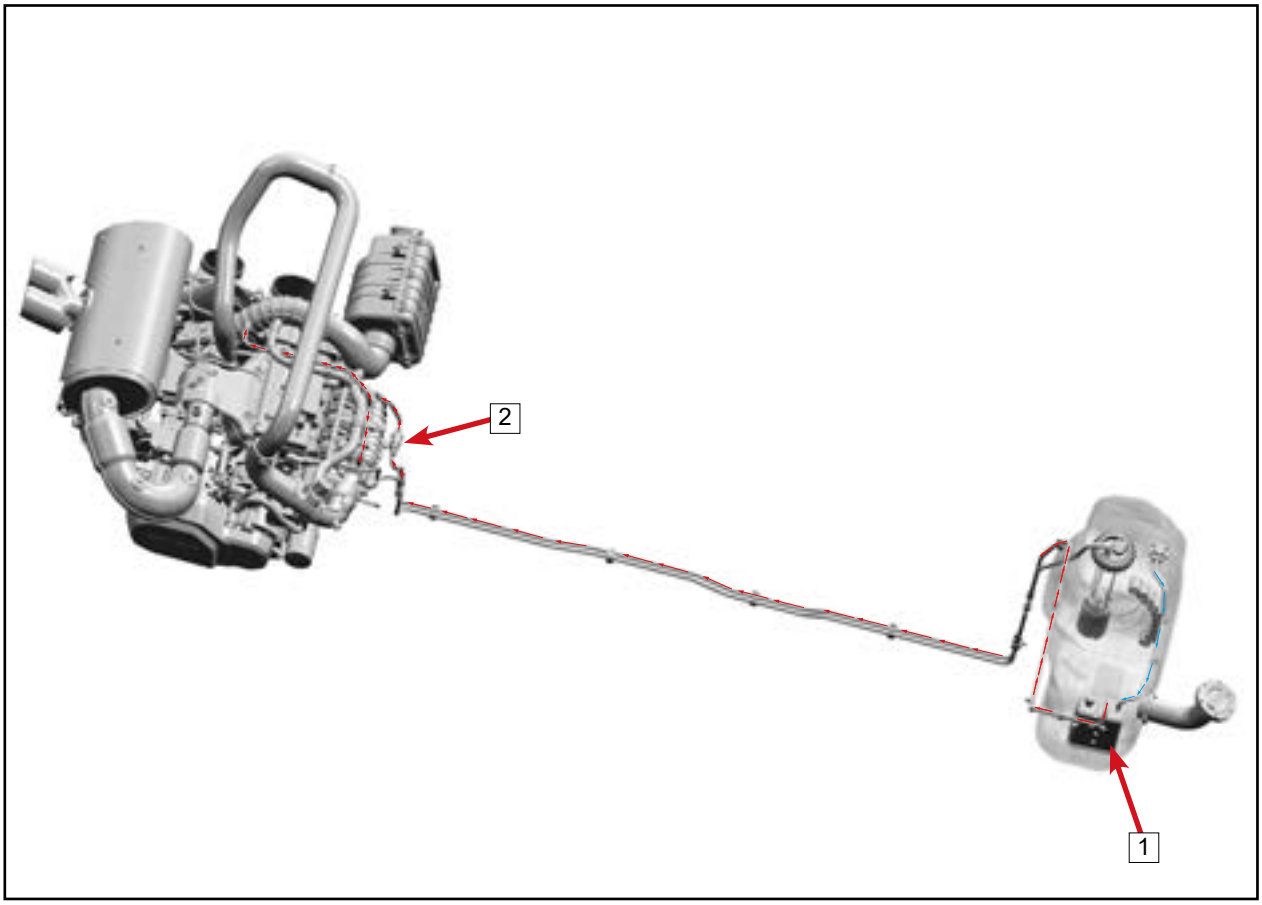

Due to the volatile nature of fuel, and to comply with environmental regulations, this vehicle is designed with a fuel evaporation system.

The blue arrow indicates fuel vapors entering the canister 1, which is absorbed by specialized charcoal material inside the canister.

The red arrow indicates that after the engine is started, negative pressure is generated in the canister, and air enters through the magnetic valve 2 to pull the fuel vapor from the canister, which then flows into the combustion chamber through the fuel vapor desorption pipe and into the throttle body for combustion.

© CFMOTO Powersports, Inc. This manual is subject to all applicable copyright laws. Reproduction or duplication in any form, whole or in part, is strictly prohbited.

12.12.2 Canister Test

1. Input air into one end 1 of the adsorption port, and air 2 should flow out of the vent port normally.
2. Plug the other ports, then add 2.0 Psi(14.0kpa) of low-pressure compressed air through the adsorption port 1 and hold the pressure for 30 seconds without leakage.

If there is any air leakage or the body is broken during the test, replace it.

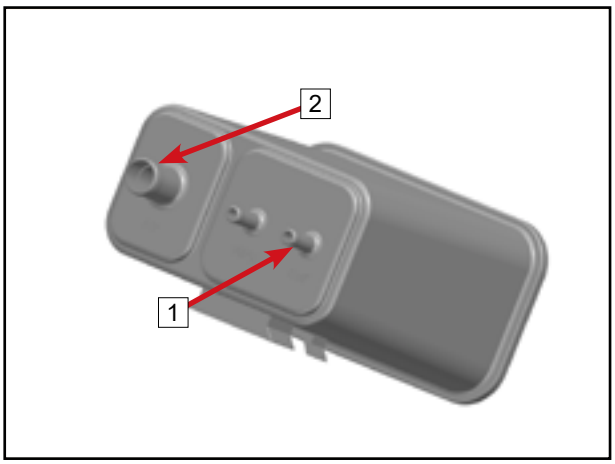

12.12.3 Canister Magnetic Valve Test

The resistance value of canister magnetic valve is measured as shown in the image.

If the resistance value in the test is greater than or less than the normal value, replace with a new part.

Canister Magnetic Valve Resistance: 17 ±2Ω

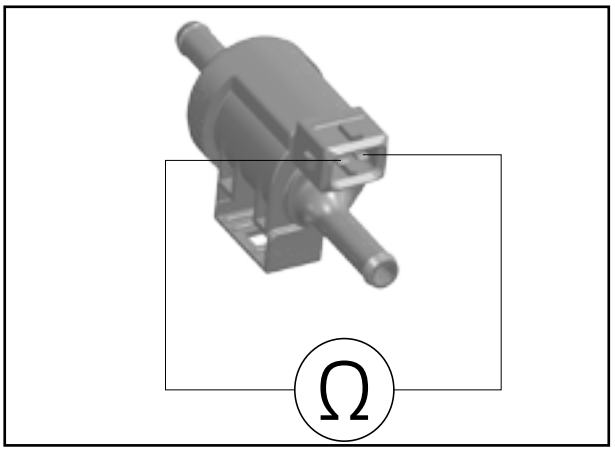

© CFMOTO Powersports, Inc. This manual is subject to all applicable copyright laws. Reproduction or duplication in any form, whole or in part, is strictly prohbited.

12.12.4 Fuel Pump

12.12.4.1 Fuel Pump Pressure Test

Connect a fuel pump pressure tester as shown.

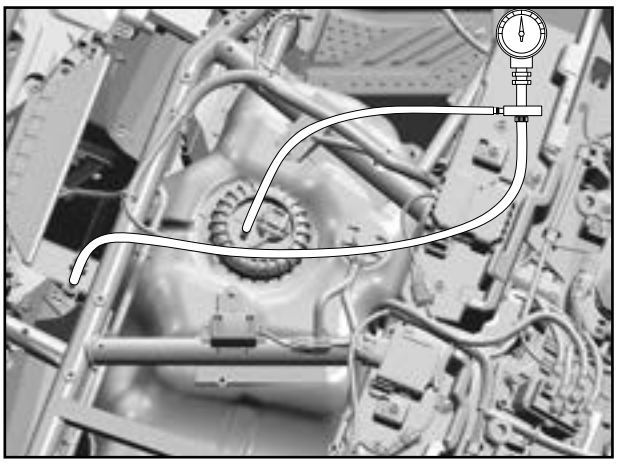

Unlock the vehicle and turn on the start/stop switch.

At this point the fuel pump self-test is working and the pump is rated to operate at 47.8 Psi (3.3 bar).

If the fuel pressure is below 47.8 Psi (3.3 bar) the fuel pump assembly is damaged. Replace it with a new one.

12.12.4.2 Fuel Pump Removal

Pre-work

Remove the access panel (See Chapter 06).

Removal

Unscrew the lock ring counterclockwise [1].

Remove fuel pump [2].

Replace it with a new one [3].

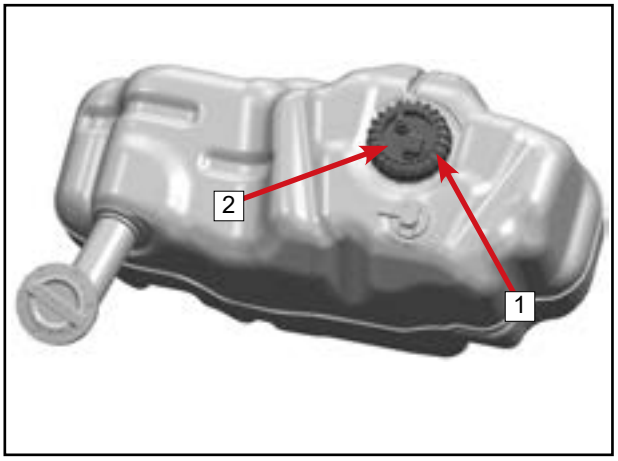

Installation

Reverse the removal procedures for installation.

⚠CAUTION

Before removing, relieve the fuel pressure first. This will prevent a large amount of fuel from spilling out when removing the fuel pipe, which may cause a safety hazard.

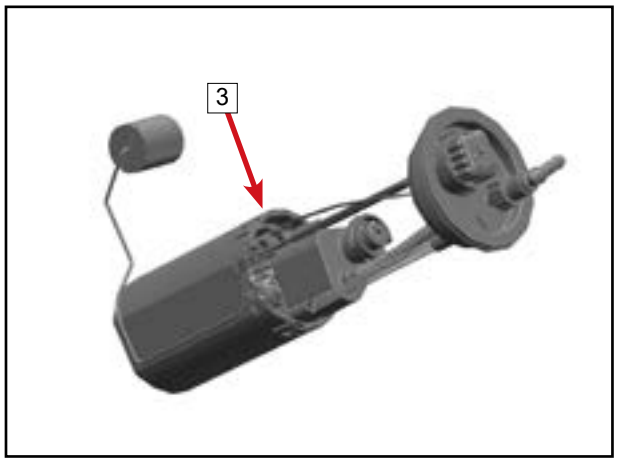

12.12.4.3 Fuel Level Sensor Test

1. Test as shown in the image.
2. Swing the float chamber up and down. As the angle changes, the multimeter will show different resistance values.

3. Resistance value specifications are as follows:

Float state	EMPTY	FULL
Resistance value (Ω)	90 ±2	6 ±2
Float bottom height	25 ±5	220 ±5

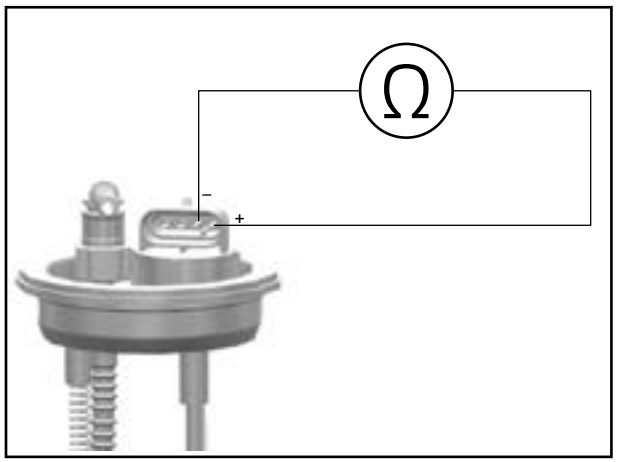

If the resistance value is not within the above range, it means that the fuel level sensor is damaged. Replace with a new pump.

© CFMOTO Powersports, Inc. This manual is subject to all applicable copyright laws. Reproduction or duplication in any form, whole or in part, is strictly prohibited.

12.13 EFI System

12.13.1 EFI System Location Map

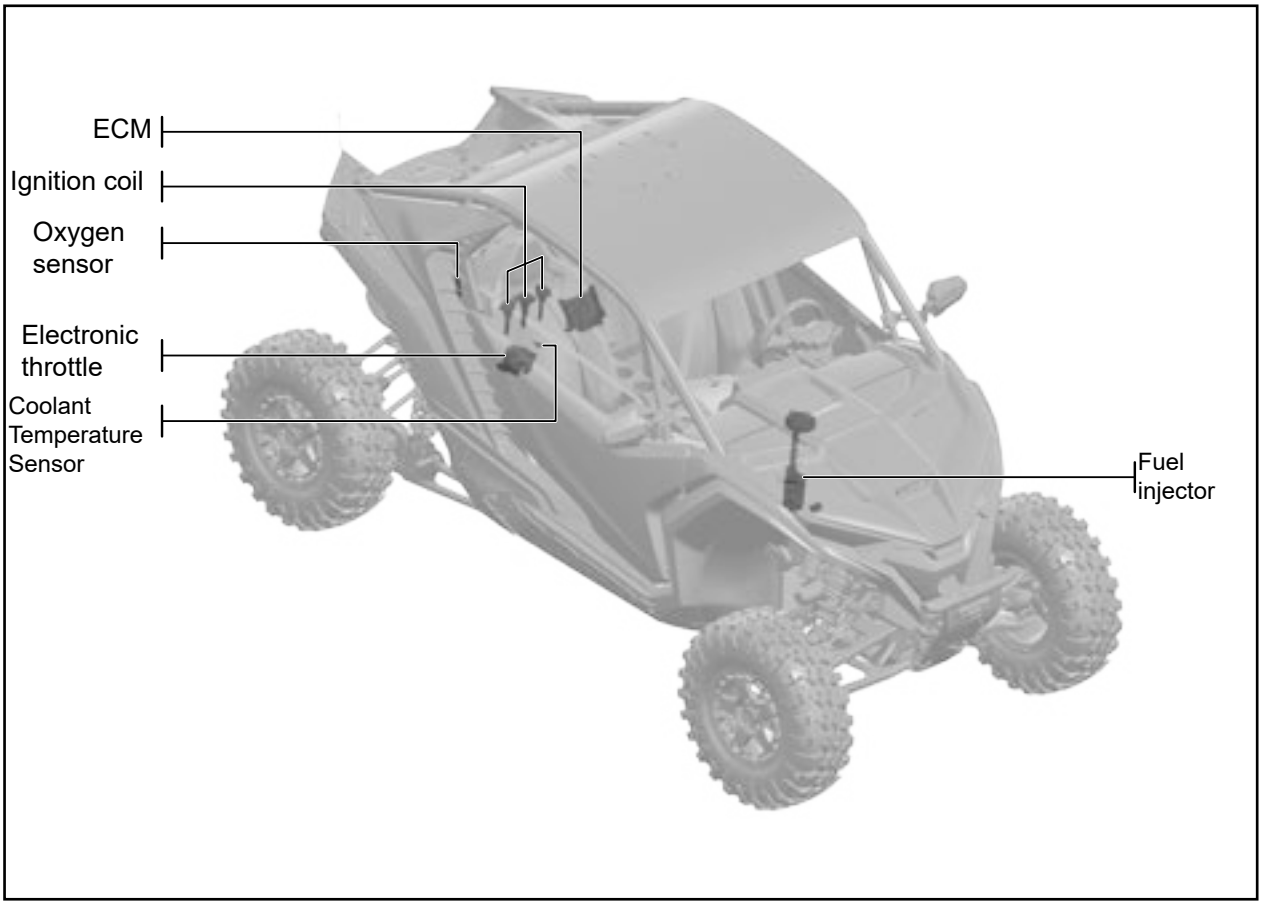

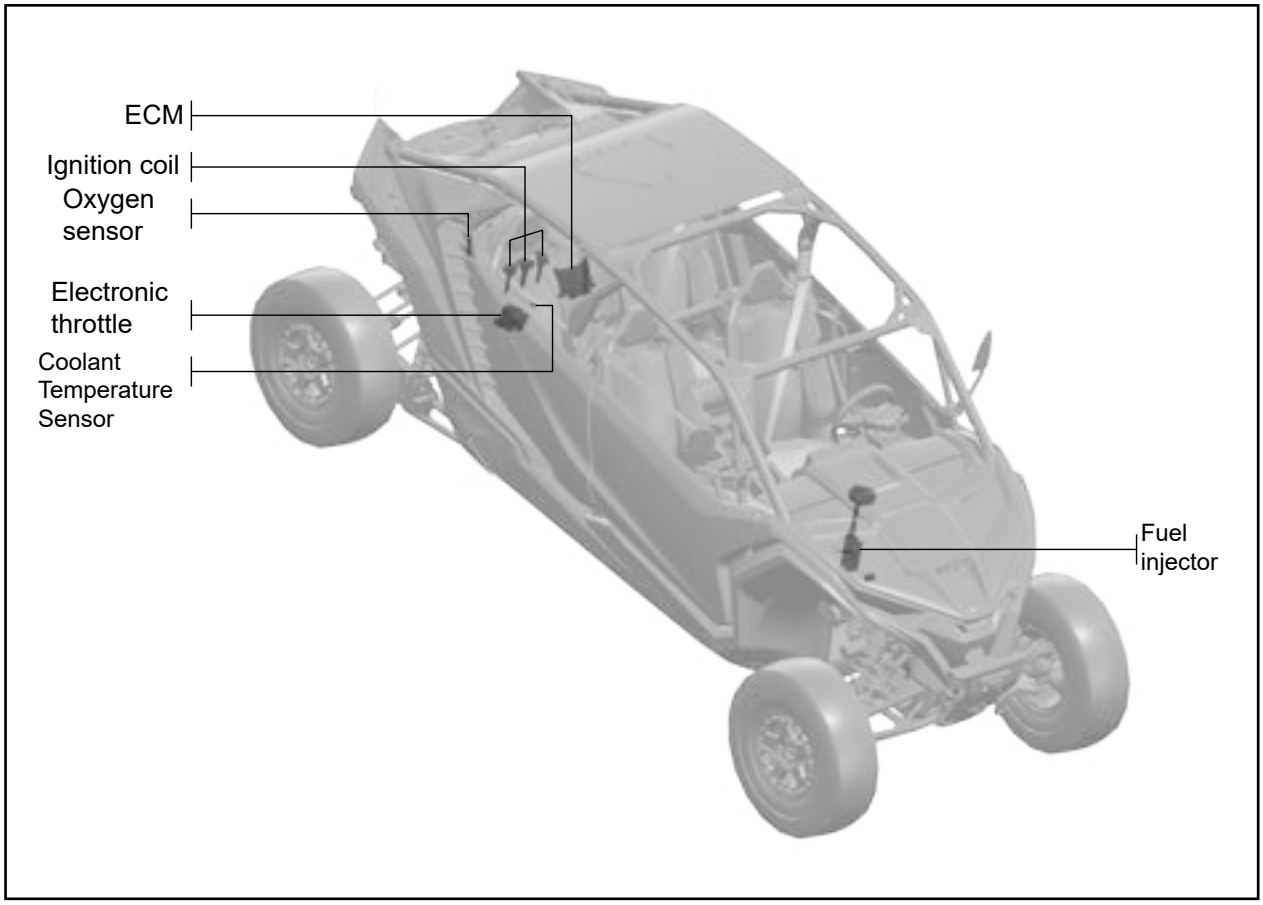

© CFMOTO Powersports, Inc. This manual is subject to all applicable copyright laws. Reproduction or duplication in any form, whole or in part, is strictly prohibited.

12.14 EFI System

12.14.1 EFI System Construction

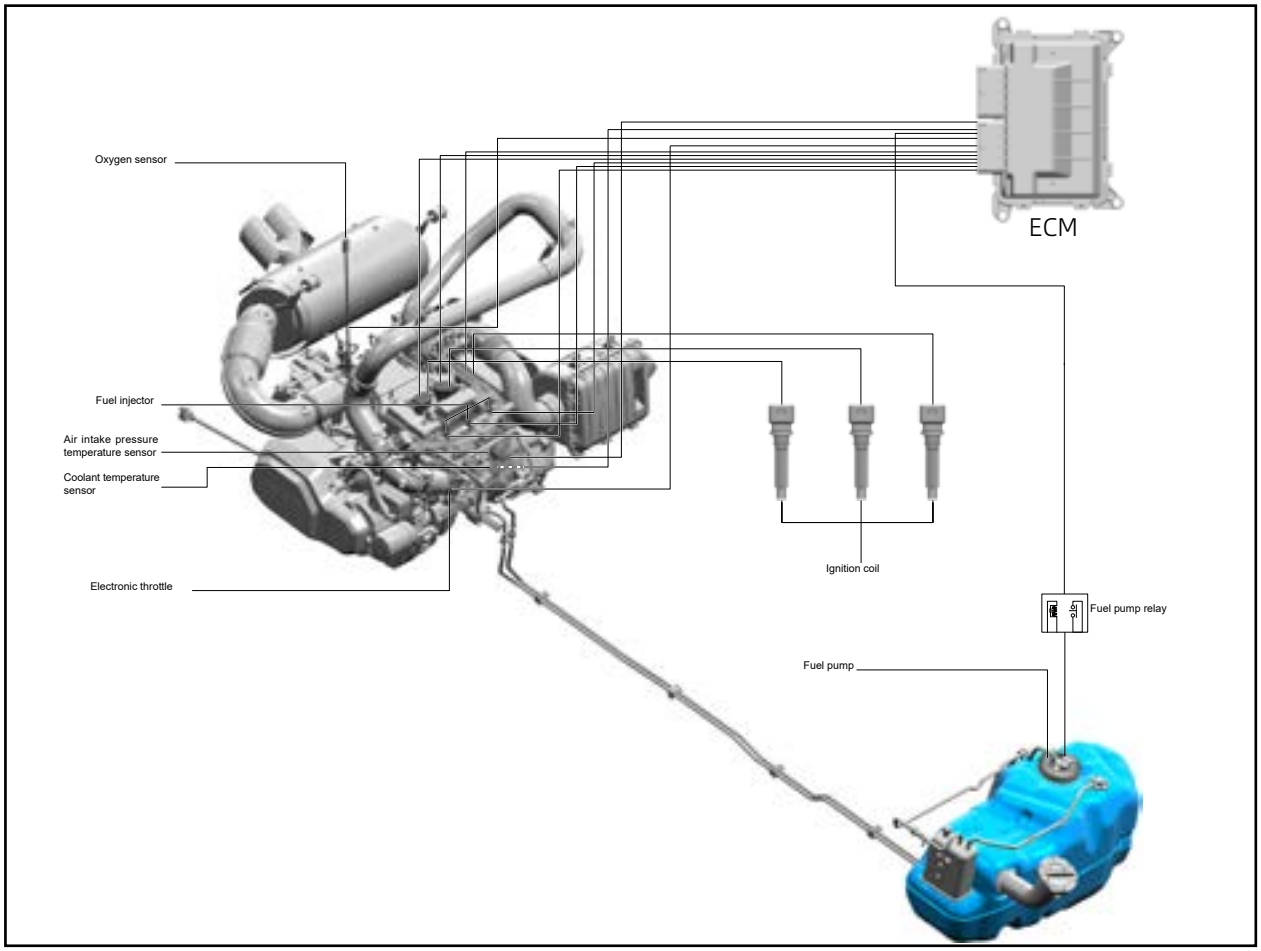

12.14.2 Sensors

Sensors convert various non-electrical physical quantities of the engine into electrical quantities and provides various information to the electronic control unit. They are the eyes and ears of the electronic control unit. They include the following sensors.

Intake pressure sensor

Intake temperature sensor

Throttle position sensor (load information load range information, acceleration and deceleration information)

Coolant temperature sensor (engine temperature information)

Oxygen sensor (excess air coefficient i.e. λ greater than 1 or less than 1 information)

12.14.3 ECM

Electronic control unit, the brain of the entire EFI system. It analyzes and processes the information provided by the sensors and sends the conclusions in the form of commands to the actuators so that the engine operates in an optimal state.

12.14.4 Actuators

Execute the commands of the electronic control unit ECM. Actuators are the hands and feet of the electronic control unit. The main actuators are:

Fuel pump assembly (provides high pressure fuel)

Fuel injector (dosing the fuel injection to make the fuel atomization better)

Ignition coil (provides high pressure ignition energy to the spark plugs)

© CFMOTO Powersports, Inc. This manual is subject to all applicable copyright laws. Reproduction or duplication in any form, whole or in part, is strictly prohbited.

12.14.5 EFI System Maintenance Precautions

Use genuine CFMOTO parts for repair work, otherwise the normal operation of the EFI system cannot be guaranteed.

Do not disassemble the EFI parts during the repair process.

During maintenance, EFI parts should be handled gently.

When disconnecting or connecting connectors, be sure to turn off ignition switch, otherwise the EFI parts could be damaged.

When removing electric fuel pump from fuel tank, do not energize the pump to avoid electrical sparks that could cause a fire.

The fuel pump is not allowed to run in dry state or under water, otherwise its service life will be reduced. Do not connect the positive and negative wires of the fuel pump inversely.

The fuel supply pressure of EFI system is high (47.8 Psi / 3.3 bar), and all fuel pipes are made of high pressure material. Even if the engine is not running, the fuel pressure in the fuel line is still high, so be careful not to remove a pressurized fuel line during maintenance.

When checking the ignition system, only carry out a spark test when necessary and for as short a time as possible. The throttle must not be opened during the test, otherwise a large amount of unburned gasoline will enter the exhaust pipe which could damage the catalytic converter.

If the fuel system needs to be repaired, the fuel system should be depressurized before removing the fuel line, the depressurization method is as follows:

Remove the fuel pump relay, start the engine and let it idle until the engine turns off by itself.

Fuel pipe removal and fuel filter replacement should be carried out in a well-ventilated area by professional personnel.

When connecting the battery, the positive and negative terminals of the battery must not be connected inversely to avoid damaging electronic components. This system uses negative grounding.

When the engine is running, do not remove the battery cables.

Before welding on the vehicle, the positive and negative cables of the battery and the electronic control unit must be removed.

Do not use the method of piercing the jacket of a wire to detect electrical signals or the input and output of parts.

Practice environmental protection awareness and effectively dispose of waste generated during the maintenance/repair process.

© CFMOTO Powersports, Inc. This manual is subject to all applicable copyright laws. Reproduction or duplication in any form, whole or in part, is strictly prohibited.

12.14.6 Electronic Throttle Body

NOTE:
Do not place loads on the housing or cover.
Handle gently and do not allow to fall on the floor.

Throttle Body Assembly
Connects to the engine and the air filter. Controls the opening and closing angle of the throttle valve plate by a motor. The angle signal is transmitted to the ECM by the throttle position sensor.

Throttle body assembly

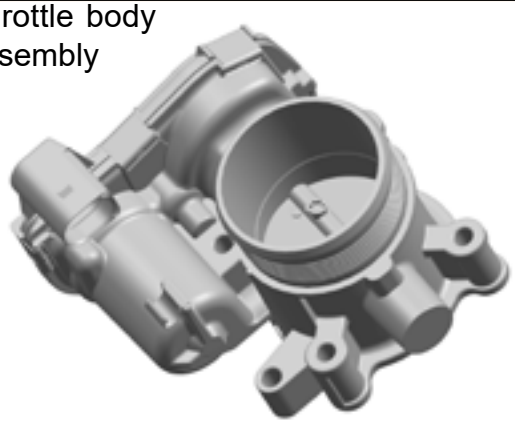

Pin Function:
1#：Throttle signal 1
2#：Throttle 5V power
3#：Throttle actuator +
4#：Throttle signal 2
5#：Throttle actuator -
6#：Throttle ground.

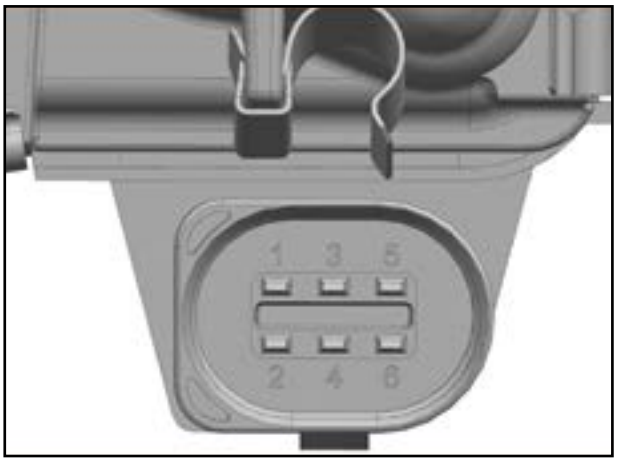

© CFMOTO Powersports, Inc. This manual is subject to all applicable copyright laws. Reproduction or duplication in any form, whole or in part, is strictly prohbited.

12.14.6.1 Throttle Body Motor Fault Diagnosis

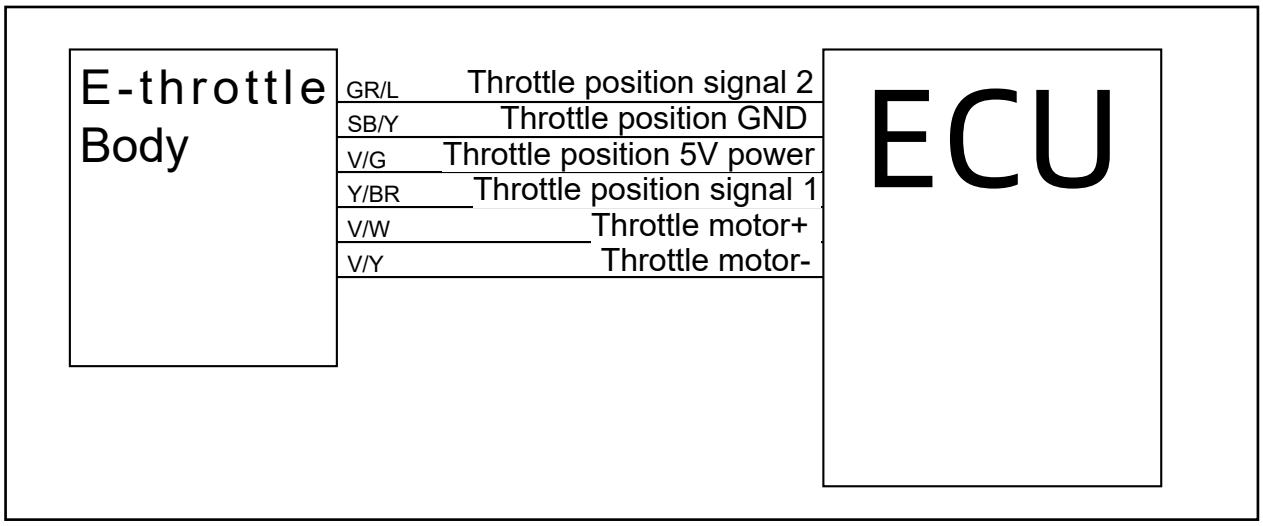

Harness Inspection

Use DSCAN to check the sensor voltage. Check if the voltage display is around 0V.

NO → Intermittent failure, poor contact of the connector.

YES ↓

Sensor Power Inspection

Use the multimeter to connect the V/W and V/Y wires. Check whether the voltage is approximately 12V.

NO → Check whether V/Y and L/Y are short-circuited or open-circuited. If there is no short circuit or open circuit, replace the ECU with a new one and recheck.

YES ↓

Replace with the new parts and then recheck.

© CFMOTO Powersports, Inc. This manual is subject to all applicable copyright laws. Reproduction or duplication in any form, whole or in part, is strictly prohbited.

12.14.6.2 Throttle Body Sensor Fault Diagnosis

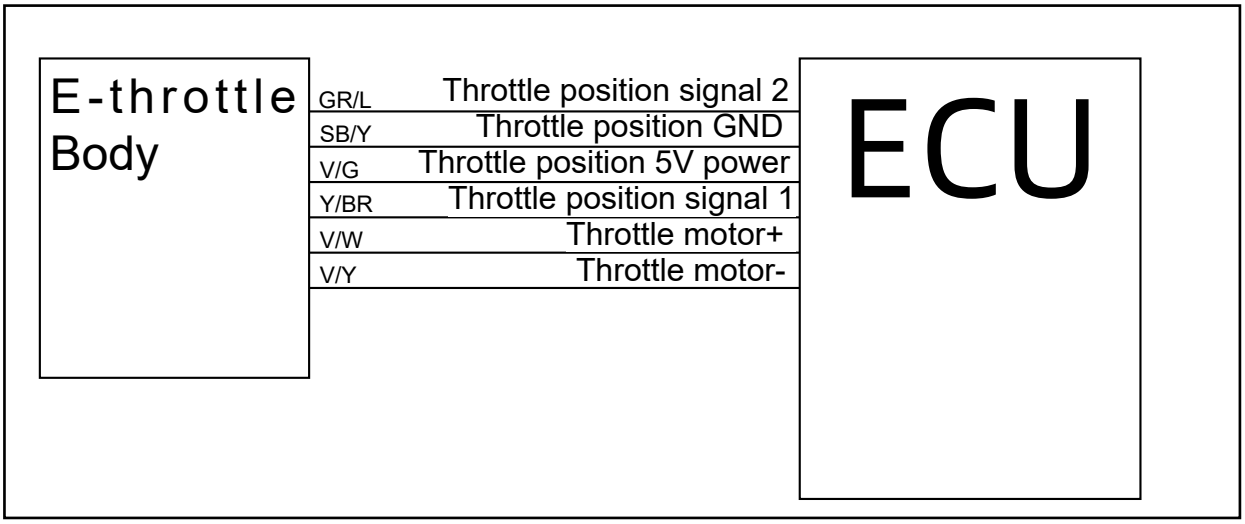

Harness Inspection

Use DSCAN to check the sensor voltage. Check if the voltage display is around 0V.

NO → Intermittent failure, poor contact of the connector.

YES ↓

Sensor Power Inspection

Use the multimeter to connect the V/G and Y/BR wires. Check whether the voltage is approximately 5-5.25V.

NO → Check whether V/G and Y/BR are short-circuited or open-circuited. If there is no short circuit or open circuit, replace the ECU with a new one and re-check.

YES ↓

Replace with the new parts and then recheck.

© CFMOTO Powersports, Inc. This manual is subject to all applicable copyright laws. Reproduction or duplication in any form, whole or in part, is strictly prohbited.

12.14.7 Electronic Throttle Pedal Assembly

12.14.7.1 E-throttle Pedal Pin Definition

Pin	Definition	
A	Output signal 1	APS 1
B	GND 1	GND 1
C	Power supply voltage 1	VCC 1 (+5V)
D	Power supply voltage 2	VCC 2 (+5V)
E	GND 2	GND 2
F	Output signal 2	APS 2

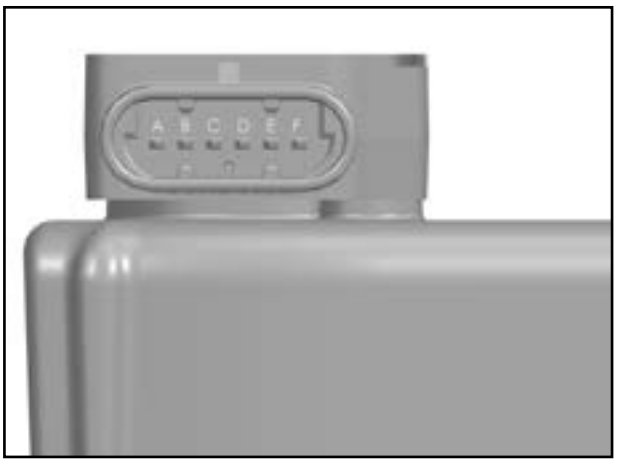

12.14.7.2 Electronic Throttle Assembly Inspection

Check whether the wiring harness connector is properly connected.

With the pedal position at 0°:
Output signal 1 voltage: 0.75 ±0.1V
Output signal 2 voltage: 0.375 ±0.1V

With the pedal at the limit position:
Output signal 1 voltage: 4.1 ±0.2V
Output signal 2 voltage: 2.05 ±0.2V

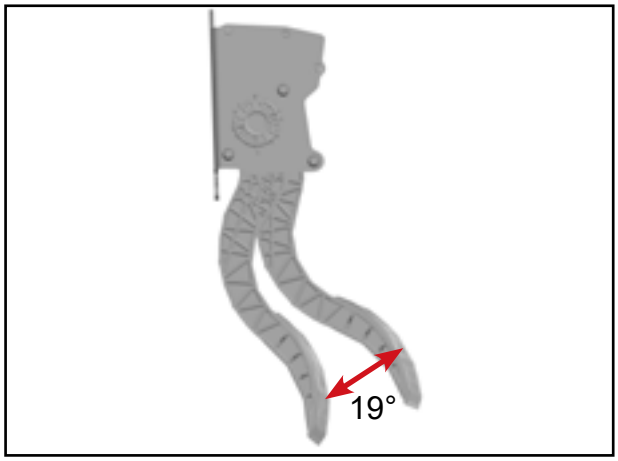

© CFMOTO Powersports, Inc. This manual is subject to all applicable copyright laws. Reproduction or duplication in any form, whole or in part, is strictly prohibited.

12.14.7.3 Electronic Throttle Pedal Sensor Fault Diagnosis

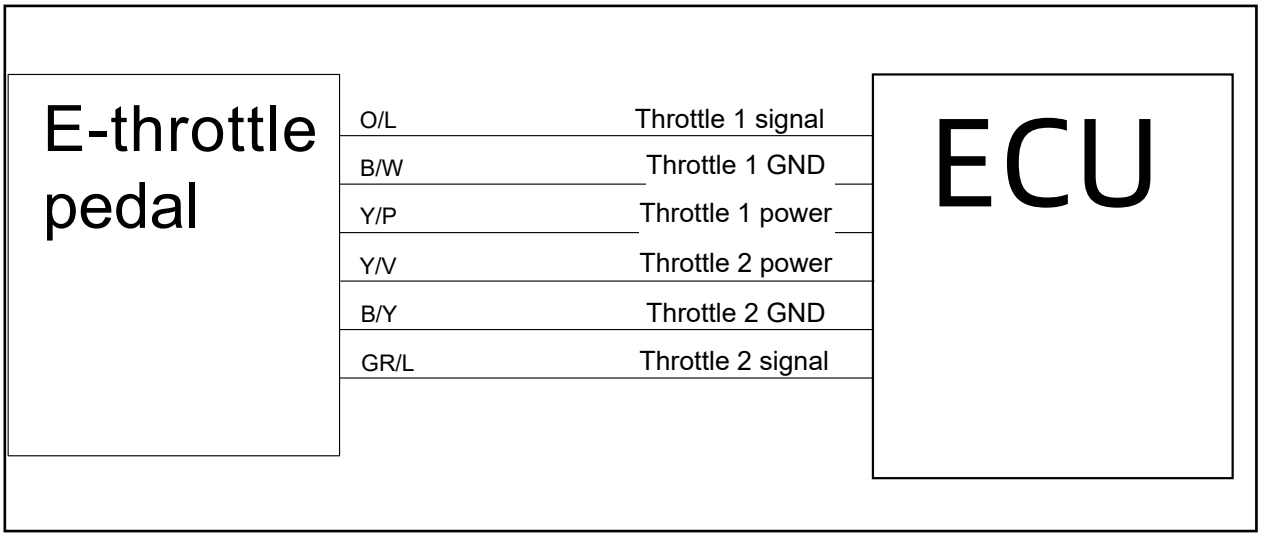

Harness Inspection

Use DSCAN to check the sensor voltage. Check if the voltage display is around 0V.

NO → Intermittent failure, poor contact of the connector.

YES ↓

Sensor Power Inspection

Power on the vehicle.
Use a multimeter to connect the O/L and B/W wires.
Slowly press the throttle pedal.
Check whether the voltage is around 0.75-4.1V.
Use a multimeter to connect the GR/L and B/Y wires.
Slowly press the throttle pedal.
Check whether the voltage is around 0.375-2.05V.

NO → Check whether Y/P and B/W are short-circuited or open-circuited.
Check whether Y/V and B/Y are short-circuited or open-circuited.
If there is no short circuit or open circuit, replace the ECU with a new one and recheck.

YES ↓

Replace with the new parts and then recheck.

© CFMOTO Powersports, Inc. This manual is subject to all applicable copyright laws. Reproduction or duplication in any form, whole or in part, is strictly prohibited.

12.14.8 Ignition Coil Inspection

Ignition Coil Resistance Test

Remove ignition coil (refer to chapter 5)
Measure the ignition coil resistance with a multimeter as shown in the image.

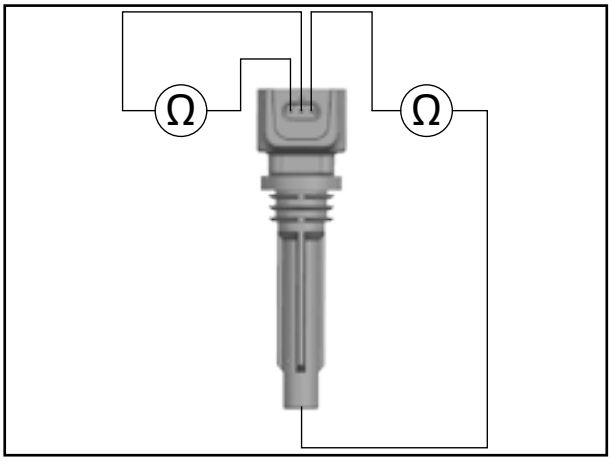

Primary Resistance Value: 0.55 ±10%Ω
Secondary Resistance Value: 7.0 ±10%kΩ

Ignition Coil Specification Table:

	Value	Unit		Value	Unit
Operating voltage range	7-18	V	Secondary resistance	7 ±10%	kΩ
Operating temperature range	-40 ±140	℃	Secondary inductance	12 ±10%	H
Charge time	2.35	msec	Secondary output voltage	34 ±5%	kV
Primary current	7 ±0.5	A	Zener energy	36 ±5%	mJ
Primary resistance	0.55 ±10%	Ω	Engine speed range	0-10000	rpm
Primary Inductance	2.5 ±10%	mH			

© CFMOTO Powersports, Inc. This manual is subject to all applicable copyright laws. Reproduction or duplication in any form, whole or in part, is strictly prohbited.

12.14.9 Coolant Temperature Sensor

This sensor is a set of two negative temperature coefficient (NTC) thermistors whose resistance value decreases as the coolant temperature increases,.but the relationship is not linear. It provides a temperature value to the dashboard through the ECM.

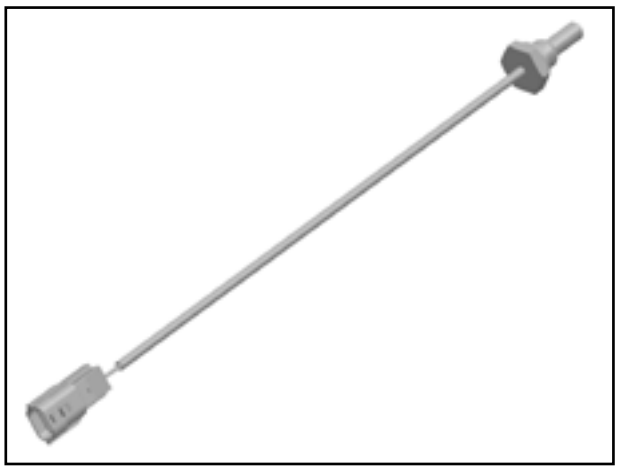

The right table shows the resistance value of the sensor at different temperatures.

Temperature Range °C	Resistance (Ω)
-40	45.313
-30	26.114
-20	13.469~17.453
-10	8.160~10.740
0	5.896
10	3.792
20	2.270~2.730
30	1.707
40	1.175
50	0.834
60	0.596
70	0.436
80	0.290~0.354
90	0.243
100	0.187
110	0.127~0.162
120	0.113
130	0.089

© CFMOTO Powersports, Inc. This manual is subject to all applicable copyright laws. Reproduction or duplication in any form, whole or in part, is strictly prohbited.

12.14.10 Oxygen Sensor

This sensor is used in the feedback system of electronically controlled fuel injection devices to realize closed-loop control and improve the accuracy of the ECM control of the air-fuel ratio.

It is installed on the exhaust pipe to measure the oxygen content in the exhaust gas and determine whether the gasoline and air are completely combusted, so as to ensure that the three-way catalytic converter has the maximum conversion efficiency of HC, CO and NO_X in the exhaust gas.

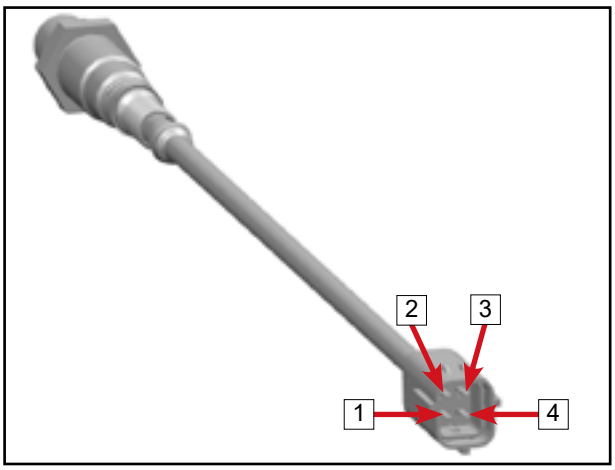

Pin Function:

1. Heating power supply+
2. Heating GND-
3. Output signal voltage+
4. Output signal voltage-

12.14.11 Fuel Injector

12.14.11.1 Fuel Injector Resistance Test

1. The test method is shown in the image.

Fuel Injector Resistance value: 11.5-12.5Ω.

If the resistance value is not within the above range, the fuel injector is damaged, replace it.

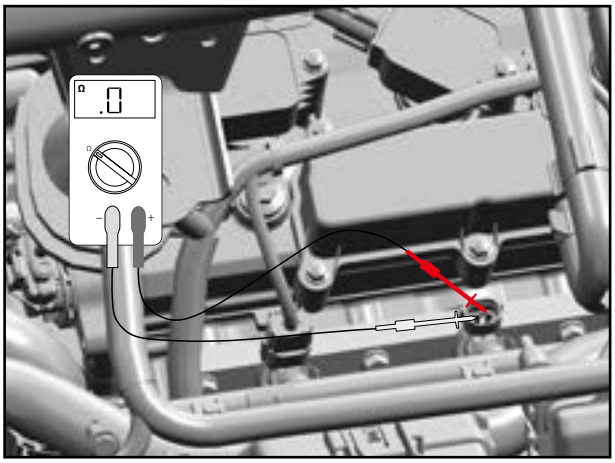

12.14.11.2 Fuel Injector Input Voltage Detection

1. Use a multimeter to connect the harness terminals as shown.
2. Unlock the vehicle and turn on the ignition switch.
3. Check if the voltage value shows approximately 12V.

If there is no voltage display or the voltage display is too low, check whether the wiring harness is open circuit or the battery is undercharged.

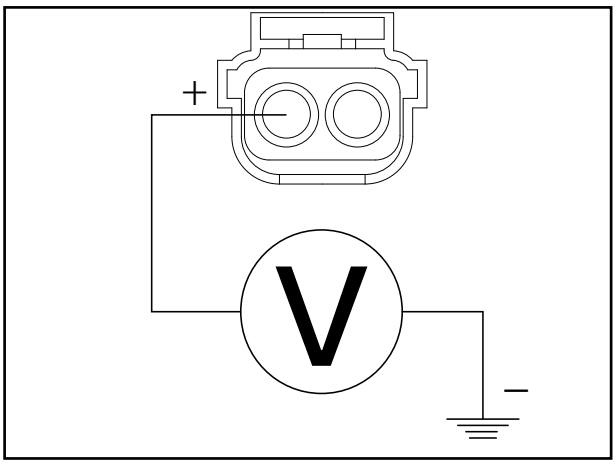

© CFMOTO Powersports, Inc. This manual is subject to all applicable copyright laws. Reproduction or duplication in any form, whole or in part, is strictly prohibited.

12.14.12 Air Intake Pressure & Temperature Sensor

This sensor monitors the pressure and air temperature in the intake pipe to provide the ECM with load information of the engine.

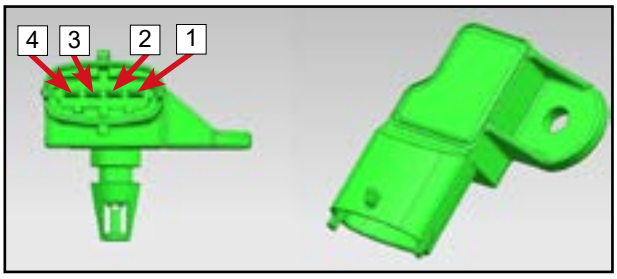

Pin Function:

1. GND
2. Air intake temperature
3. Connect to 5V power
4. Air intake pressure

The image below shows the allowable installation range, which ensures that no condensation will form inside the sensor, as condensation can damage the pressure sensitive elements inside the sensor.

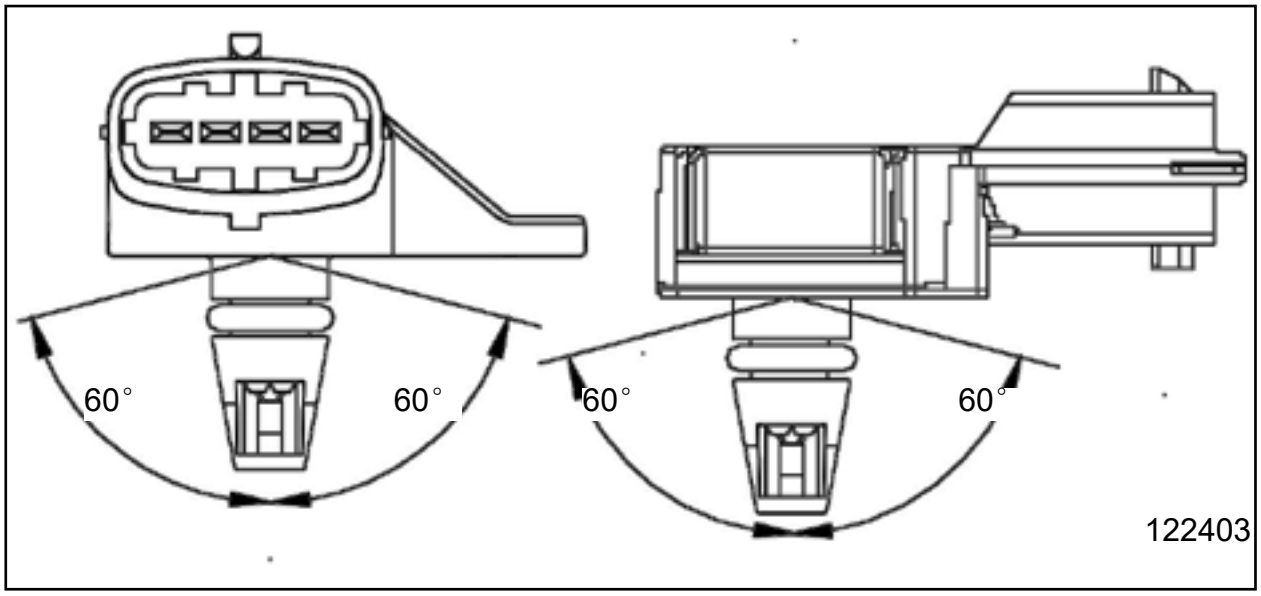

© CFMOTO Powersports, Inc. This manual is subject to all applicable copyright laws. Reproduction or duplication in any form, whole or in part, is strictly prohbited.

12.14.13 ECM

Electronic control unit is the brain of the EFI system. It analyzes the information provided by the sensors, and sends a conclusion in the form of instructions to the actuators, which allow the engine run in an optimal condition.

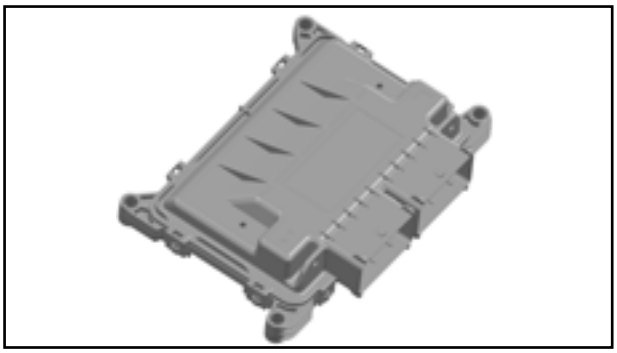

ECM Pin Function:

NO.	Pin Function	NO.	Pin Function	NO.	Pin Function
1	ECU GND 1	40	Wastegate Actuator Motor +	79	
2	ECU GND 2	41		80	P-gear Switch
3		42	Brake Switch 2	81	
4	CAN 1 H	43	Pedal 1 GND	82	R-gear Switch
5	CAN 1 L	43	Pedal 2 GND	83	
6		45		84	
7		46		85	Downhill Brake Switch
8		47	H-gear Switch	86	
9	Starter Relay	48	PWM Fan 1	87	
10	Electric Auxiliary Water Pump	49		88	
11		50	Ignition Switch	89	
12	Continuous Power Supply	51	Main Relay	90	Air Conditioning Compressor Relay
13		52	Non-continuous Power Supply	91	Fuel Pump Relay
14		53	Wastegate Actuator Motor -	92	Cooling Temp. Sensor
15		54	ECU GND 4	93	Phase Sensor (Intake)
16		55	Brake Switch 1	94	Intake Pressure Sensor
17		56		95	Throttle GND
18		57	Mode LH Turn Signal	96	TPS 2
19		58	Mode RH Turn Signal	97	
20		59	Hand Brake Switch	98	Hall Sensor 5v Power
21		60	LIN Bus 1 (Master Node)	99	
22		61	PWM Fan 2	100	Speed Input
23		62	Air Conditioning Compressor Relay	101	
24		63		102	Fuel Injector (Cylinder 1)
25		64	N-gear Switch	103	
26	ECU GND 3	65		104	Canister Control Valve
27		66	Upstream Oxygen Sensor Heating	105	Throttle Actuator Motor +
28		67	Intake Temp. Sensor	106	Sensor GND
29		68	Boost Pressure Sensor	107	4WD Dif-lock Switch

© CFMOTO Powersports, Inc. This manual is subject to all applicable copyright laws. Reproduction or duplication in any form, whole or in part, is strictly prohibited.

NO.	Pin Function	NO.	Pin Function	NO.	Pin Function
30		69		108	Knock Sensor B
31		70		109	Knock Sensor A
32	Accelerator Pedal Sensor 1	71	EWG Position Feedback	110	
33	Accelerator Pedal Sensor 2	72	Phase 5v Power	111	Hall Speed Sensor End
34		73		112	Boost Temperature Sensor
35		74	Turbocharger Wastegate	113	
36		75		114	Fuel Injector 3 (Cylinder 2)
37	Pedal 1 5v Power	76		115	Fuel Injector 2 (Cylinder 3)
38	Pedal 2 5v Power	77		116	Ignition Coil 1 (Cylinder 1)
39	Non-continuous Power Supply	78		117	Ignition Coil 2 (Cylinder 3)
				118	Throttle Actuator Motor -
				119	Hall Sensor GND
				120	Oxygen Sensor Signal
				121	L-gear Switch
				122	Override Switch
				123	Manifold GND
				124	
				125	TPS 1
				126	Manifold 5V Power
				127	Throttle 5V Power
				128	
				129	Ignition Coil 3 (Cylinder 2)
				130	

© CFMOTO Powersports, Inc. This manual is subject to all applicable copyright laws. Reproduction or duplication in any form, whole or in part, is strictly prohbited.

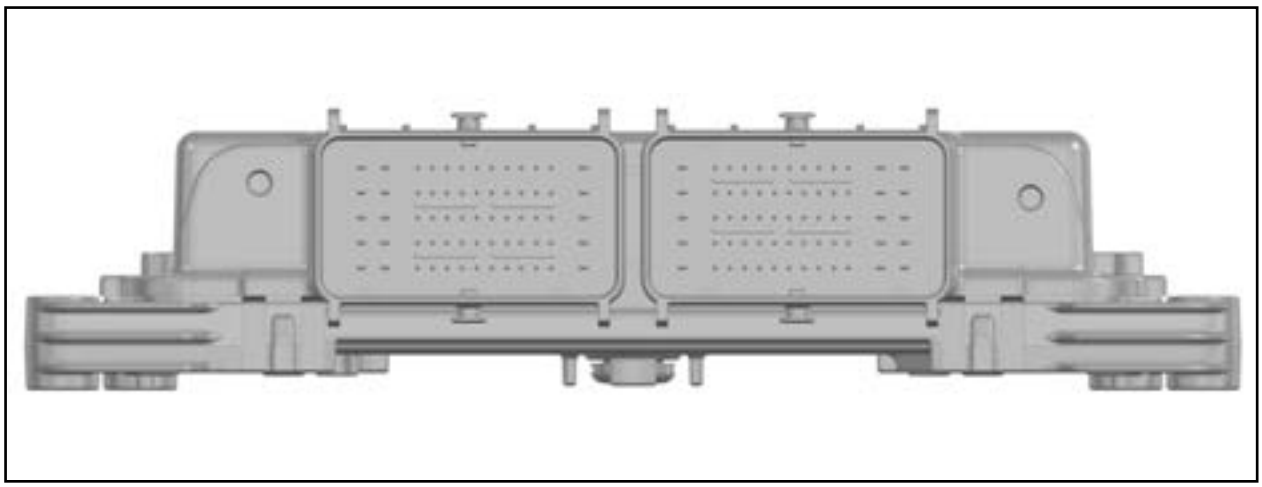

ECM Pin View

Limit Data:

Quantity		Value			Unit
		Min	Standard	Max	
Battery voltage	Normal operation	9.0	14.0 ±0.1	16	V
	Limited function	6.0~9.0		16.0~18.0	V
Limit and time to withstand battery overvoltage	26.0V	Keep some functions and perform fault diagnosis		5	min
Work temperature		-30		60	℃
Storage temperature		-40		90	℃

Removal

Turn off the vehicle power supply.

Disconnect the positive and negative terminals of battery.

Remove the connectors 1.

Remove bolts 2.

Remove ECM assembly 3.

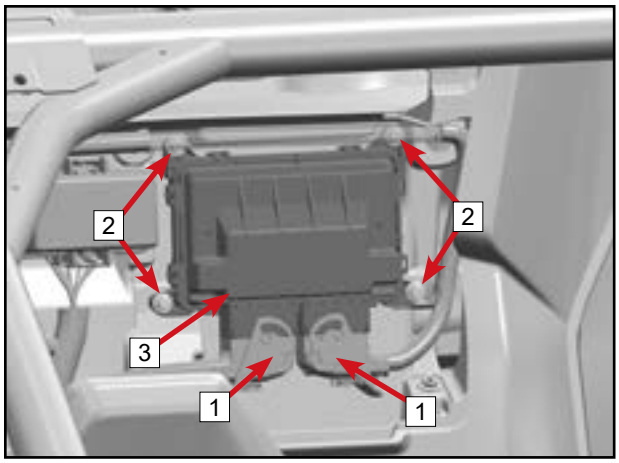

Installation

Reverse the removal procedures for installation.

⚠CAUTION: Before disassembly, power off the vehicle and disconnect the positive and negative terminals of battery to prevent damage to the ECU caused by thermal short circuit.

After the ECM is installed, wait five minutes before installing battery to prevent ECM self-learning faults.

© CFMOTO Powersports, Inc. This manual is subject to all applicable copyright laws. Reproduction or duplication in any form, whole or in part, is strictly prohibited.

12.15 EPS

12.15.1 EPS Location Map

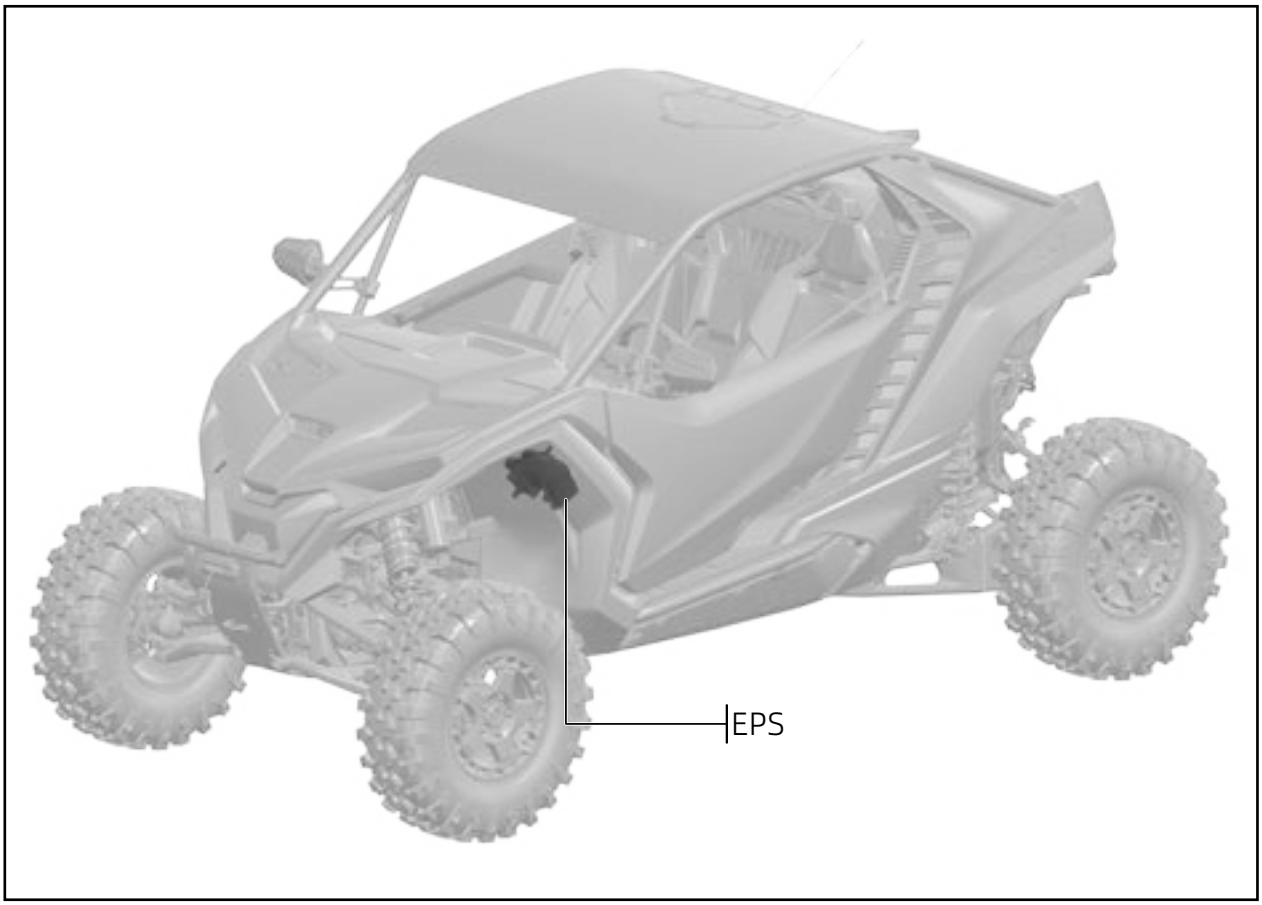

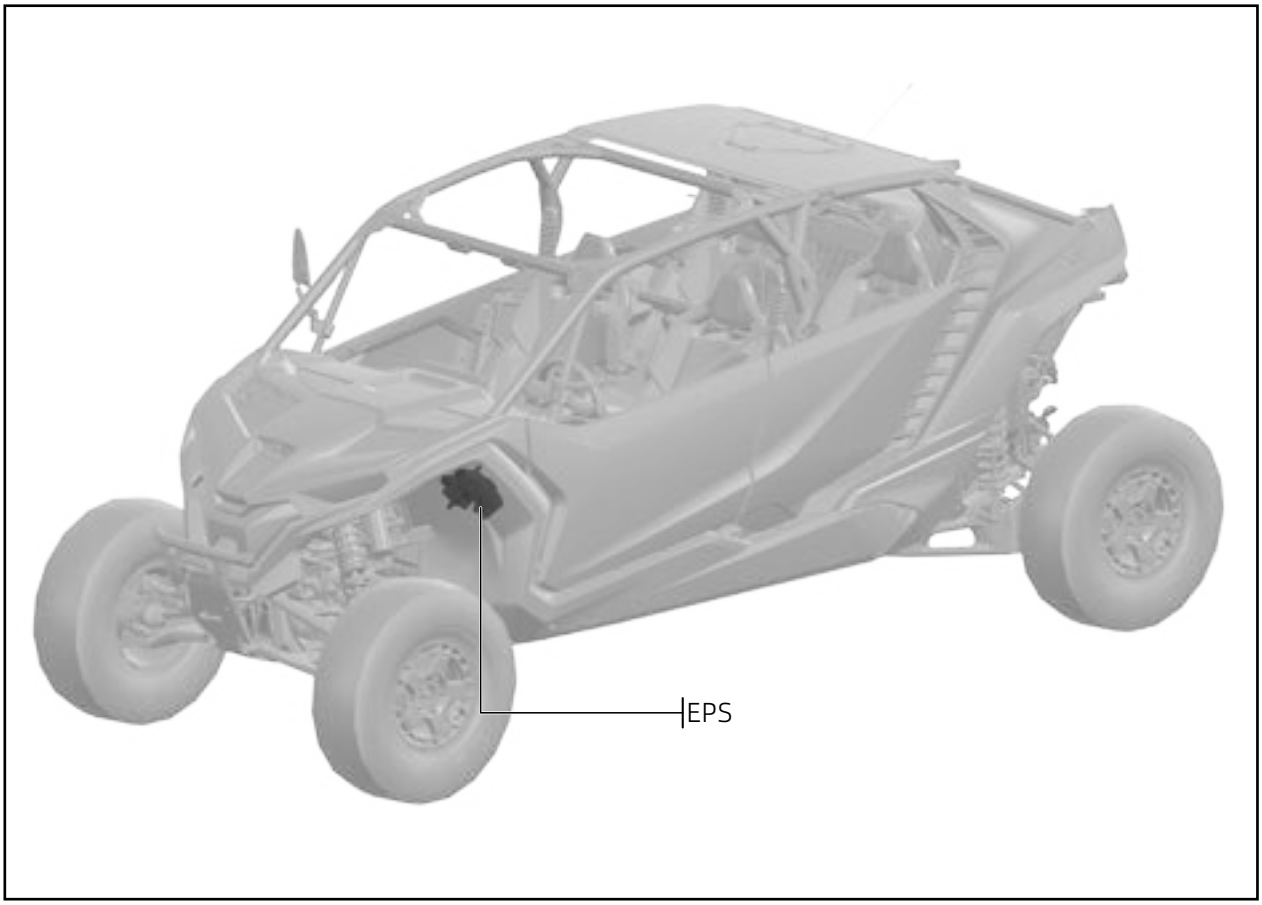

© CFMOTO Powersports, Inc. This manual is subject to all applicable copyright laws. Reproduction or duplication in any form, whole or in part, is strictly prohbited.

12.15.2 EPS Fault Code Table

DTC code	Fault attributes	Fault release conditions	Possible cause of the fault	Service suggestion
B111716	Voltage Faults	1. battery voltage >= 10V, and keep the status at least at t >= 500ms;	Battery voltage too low	Check power supply battery;
B111717	Voltage Faults	1. battery voltage <= 15V, and keep the status at least at t >= 500ms;	Battery voltage too high	Check power supply battery;
U007388	Network Faults	1. Message sent successfully;	CAN bus circuit is short or open	Check the CAN bus circuit or EMC.
U010087	Network Faults	1. Received ECM (CANID=0x108) message at least once;	CAN bus circuit is short or open	Check the CAN bus circuit or EMC.
U11C087	Network Faults	1. Received BCM (CANID=0x12A) message at least once;	CAN bus circuit is short or open	Check the CAN bus circuit or EMC.
U118287	Network Faults	1. Received DASH\ MMI (CANID=0x311) message at least once;	CAN bus circuit is short or open	Check the CAN bus circuit or EMC.
C130304	ECU Internal Faults	" Replace string or controller The external EEPROM returns to normal and is powered on again (IGN ON (KL15))	"External EEPROM damaged	"Depot repair"
C130491	Sensor Faults	"The main torque voltage signal returns to normal and power on again (IGN ON (KL15))"	1) Poor harness connector 2) Abnormal sensor 3) There is a problem with the controller detection circuit	Check the harness or replace the string / controller
C130591	Sensor Faults	"The main torque voltage signal returns to normal and power on again (IGN ON (KL15))"	1) Poor harness connector 2) Abnormal sensor 3) There is a problem with the controller detection circuit	Check the harness or replace the string / controller
C130691	Sensor Faults	"The secondary torque voltage signal returns to normal and power on again (IGN ON (KL15))"	1) Poor harness connector 2) Abnormal sensor 3) There is a problem with the controller detection circuit	Check the harness or replace the string / controller

© CFMOTO Powersports, Inc. This manual is subject to all applicable copyright laws. Reproduction or duplication in any form, whole or in part, is strictly prohbited.

C130791	Sensor Faults	"The secondary torque voltage signal returns to normal and power on again (IGN ON (KL15))"	"1) Poor harness connector 2) Abnormal sensor 3) There is a problem with the controller detection circuit"	Check the harness or replace the string / controller
C130891	Sensor Faults	"Check the torque sensor, the voltage signal returns to normal and power on again (IGN ON (KL15))"	"Poor harness connector or abnormal sensor"	Check the harness or replace the string
C130A96	Actuator Faults	"After the motor signal is normal, reignite and power on (IGN ON (KL15))"	"Drive circuit fault or abnormal motor connection line"	Check the harness or replace the string
C130B19	ECU Internal Faults	"signal is normal, re ignite and power on (IGN ON (KL15))"	"MOS short circuit or motor fault"	Replace string or controller
C1315A6	Sensor Faults	After the detected fault, the rotor angle sensor uses the SPI signal	The fault has been identified and the following problems may exist: 1. The rotor Angle chip is faulty 2. The Angle signal transmission circuit is faulty	1. Replace the EPS assembly If the above measures do not remove the fault, contact customer service
C1315B6	Sensor Faults	"After the detected fault,the rotor angle sensor uses the PWM signal"	"The fault has been identified and the following problems may exist: 1. The rotor Angle chip is faulty 2. The Angle signal transmission circuit is faulty"	1. Replace the EPS assembly If the above measures do not remove the fault, contact customer service

© CFMOTO Powersports, Inc. This manual is subject to all applicable copyright laws. Reproduction or duplication in any form, whole or in part, is strictly prohbited.

C1315D6	Sensor Faults	"signal is normal, reignite and power on (IGN ON (KL15))"	"The fault has been identified and the following problems may exist: 1. The rotor Angle chip is faulty 2. The Angle signal transmission circuit is faulty"	"1. Replace the EPS assembly If the above measures do not remove the fault, contact customer service"

C131696	Sensor Faults	"signal is normal, reignite and power on (IGN ON (KL15))"	"The fault has been identified and the following problems may exist: 1. The cable harness connector of the torque angle sensor is loosely connected 2. The cable harness of the Angle sensor is flooded or disconnected 3. The torque angle sensor is faulty 4. The internal torque angle detection circuit of the controller is faulty"	"1.Remove and reinsert the cable harness connector of the torque angle sensor. If the fault persists, go to the next step 2. Check whether the plug has water; Check whether the harness is extruded or broken; If the plug is in water, clean it and then power on the cable harness. If the harness is extruded or broken, reconnect the cable harness and then power on the cable harness. In this case, the air tightness cannot be guaranteed. Only use for the diagnosis of the fault cause. If the fault is not removed, perform the next step 3. Replace the EPS assembly If the above measures do not remove the fault, contact customer service

© CFMOTO Powersports, Inc. This manual is subject to all applicable copyright laws. Reproduction or duplication in any form, whole or in part, is strictly prohbited.

C131697	ECU Internal Faults	"After Angle Position correctly or Wheel alignment, reignite and power on (IGN ON (KL15))"	"The fault has been identified and the following problems may exist: 1. The center point of the steering wheel Angle is offset 2. The steering gear is damaged 3. The torque Angle sensor is faulty"	"1. Use the diagnostic instrument to read the steering wheel Angle. If the reading direction Angle can change continuously with the rotation of the steering wheel, it proves that the torque Angle sensor is normal. At this time, judge whether the left and right limit Angle exceeds the set threshold (±900°). If they exceed the set threshold, after the steering wheel is straightened, use the diagnostic instrument to align the steering wheel Angle. If the fault is not removed, perform the next step 2. Check whether the steering gear of the vehicle is damaged. If the steering gear is damaged, replace the steering gear test. If the fault is not removed, perform the next step 3. Replace the EPS assembly If the above measures do not remove the fault, contact customer service
C131698	ECU Internal Faults	"After Wheel alignment, reignite and power on (IGN ON (KL15))"	"The fault has been identified and the following problems may exist: 1. The steering wheel Angle is not aligned 2. The midpoint of the steering wheel Angle is cleared 3. The external EEPROM chip in the controller is damaged"	"1. After the steering wheel is straightened, use the diagnostic instrument to align the steering wheel Angle. If the fault is not removed, perform the next step 2. Replace the EPS assembly If the above measures do not remove the fault, contact customer service

© CFMOTO Powersports, Inc. This manual is subject to all applicable copyright laws. Reproduction or duplication in any form, whole or in part, is strictly prohbited.

C131698	ECU Internal Faults	"After Wheel alignment, reignite and power on (IGN ON (KL15))"	"The fault has been identified and the following problems may exist: 1. The steering wheel Angle is not aligned 2. The midpoint of the steering wheel Angle is cleared 3. The external EEPROM chip in the controller is damaged"	"1. After the steering wheel is straightened, use the diagnostic instrument to align the steering wheel Angle. If the fault is not removed, perform the next step 2.Replace the EPS assembly If the above measures do not remove the fault, contact customer service"
C1315E6	ECU Internal Faults	"Check battery voltage，reignite and power on (IGN ON)"	"Low Battery Voltage"	"If the battery voltage has returned to normal and the fault cannot be resolved by re energizing, it is recommended to return to the factory for repair."

© CFMOTO Powersports, Inc. This manual is subject to all applicable copyright laws. Reproduction or duplication in any form, whole or in part, is strictly prohbited.

12.16 T-BOX

Removal

Disconnect connector 1.

Remove fixed band 2.

Remove T-Box unit 3.

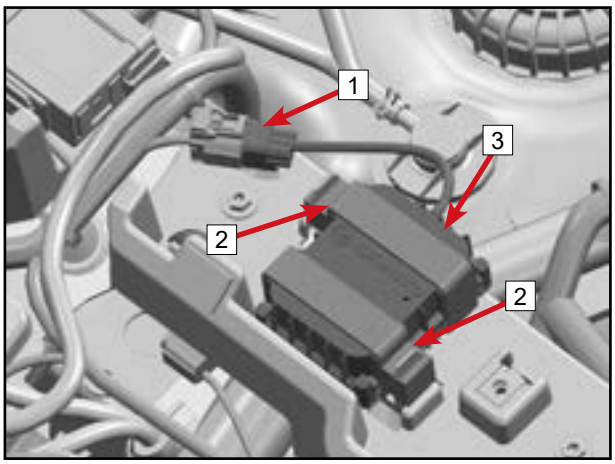

Installation

Reverse the removal procedures for installation.

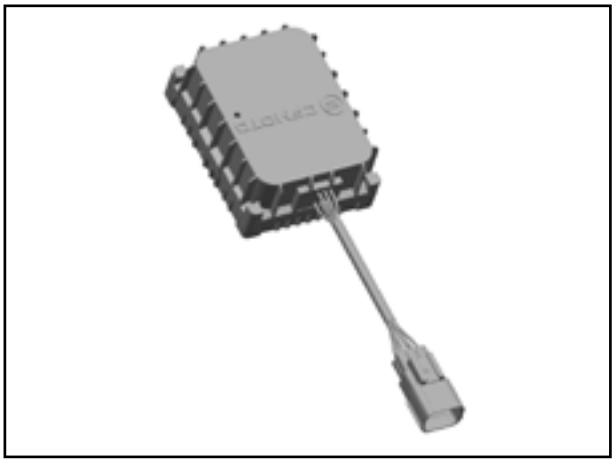

12.16.1 T-BOX PIN Function

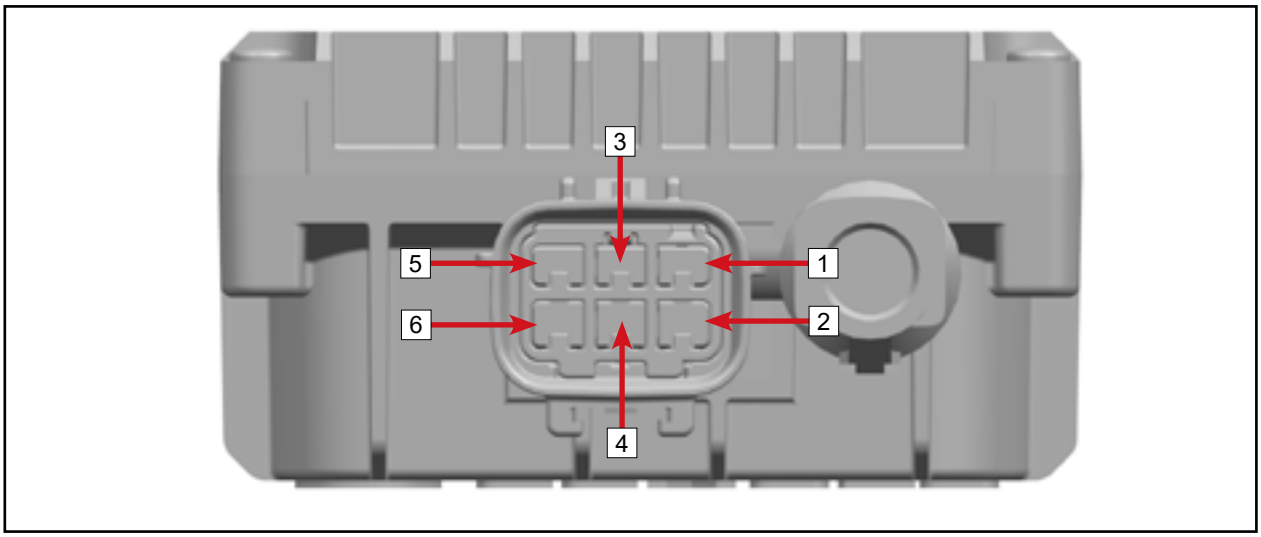

1	VBAT	2	KL.15	3	CAN H
4	CAN L	5	NC	6	GND

© CFMOTO Powersports, Inc. This manual is subject to all applicable copyright laws. Reproduction or duplication in any form, whole or in part, is strictly prohbited.

12.16.2 T-BOX Troubleshooting

Fault phenomenon	Possible cause	Treatment method
Terminal not online	Vehicle battery low voltage	Charge or replace battery
	Power fuse blown	Change fuse
	Wrong specification set	Factory reset
	SIM card is out of service or does not support GPRS function	Re-confirm SIM card function is normal.
	4G antenna not connected properly, weak signal	Check installation of 4G antenna
	Terminal fault	Return to factory for repair
Unable to locate	Vehicle is in a weak GPS signal area such as underground garage, tunnel, etc.	Go to an open area
	Is there any metal object around the GPS antenna	Adjust the installation position of GPS antenna
	Antenna problem	Reinstall the GPS antenna
Incomplete CAN bus data	Poor wire harness contact	Re-plug harness terminals or replace harness
	Terminal fault	Return to factory for repair

T-Box Fault Code Table

DTC Display Code	Fault attributes	Fault release conditions	Possible cause of the fault	Service suggestion
B111716	Voltage Faults	1.battery voltage >= 10V, and keep the status at least at t >= 500ms;	Battery voltage too low	Check power supply battery;
B111717	Voltage Faults	1.battery voltage <= 15V, and keep the status at least at t >= 500ms;	Battery voltage too high	Check power supply battery;
U007388	Network Faults	1. Message sent successfully	CAN bus circuit is short or open	Check the CAN bus circuit or EMC.
U220D00	Network Faults	1. Received and sent ring message successfully at least once	CAN bus circuit is short or open	Check the CAN bus circuit or EMC.
B200009	ECM Internal Faults	Module register success	1.SIM is abnormal; 2.Antennan is short or open; 3.LTE Module error;	1. Check the SIM status; 2. Replace TBOX;
B200551	ECM Internal Faults	SK is not the default value	SK is not written	Rewrite SK

© CFMOTO Powersports, Inc. This manual is subject to all applicable copyright laws. Reproduction or duplication in any form, whole or in part, is strictly prohbited.

12.17 Electronics System

12.17.1 Electronic Device Overview

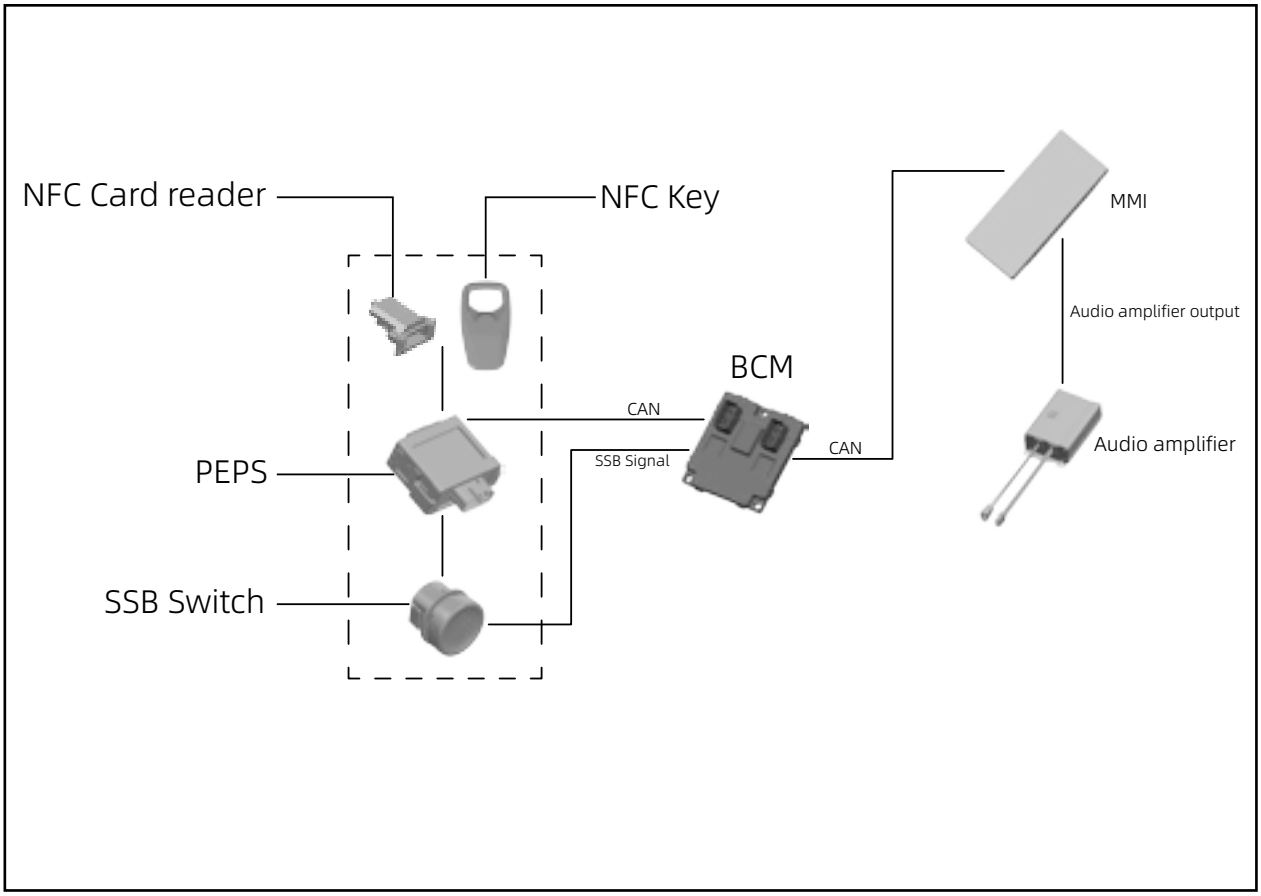

BCM
Reads signals sent by the various vehicle devices and controls certain vehicle electrical functions.

PEPS
Receives and verifies the matching data of the NFC key in the card reader.

SSB
Start/Stop button controls the engine starter system and vehicle power-up/shut-down.

MMI
Displays vehicle operating data, has interative features, and controls certain vehicle electrical functions.

Audio Amplifier
Turn on or adjust the volume of the power amplifier according to control signals from the MMI dashboard.

© CFMOTO Powersports, Inc. This manual is subject to all applicable copyright laws. Reproduction or duplication in any form, whole or in part, is strictly prohbited.

12.17.2 BCM
12.17.2.1 BCM Pin Function

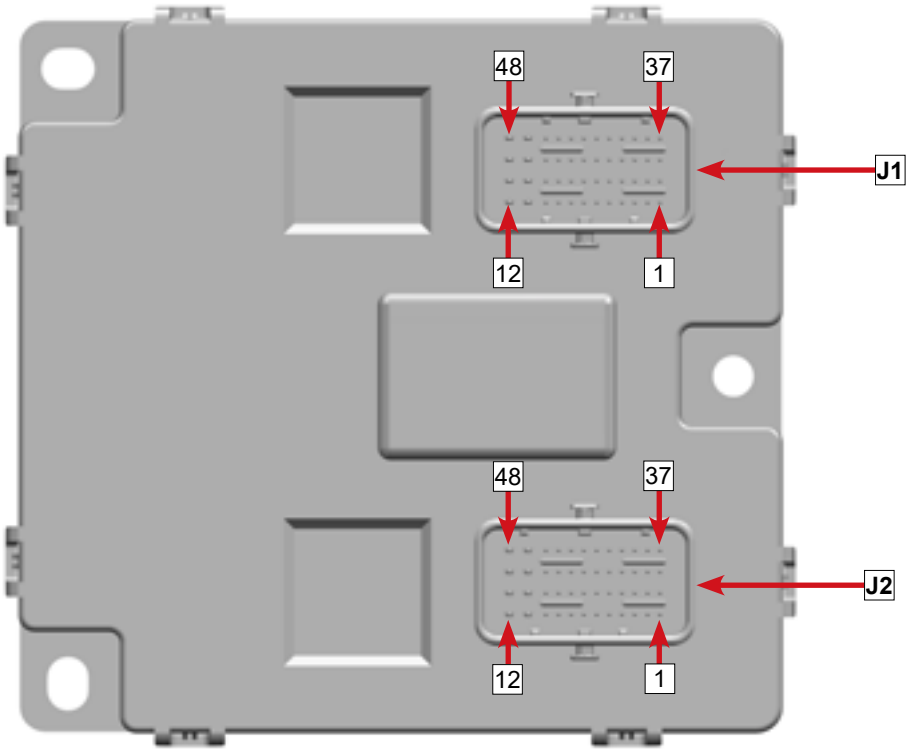

J1 Connector					
Pin	**Pin Function**	**Remark**	**Pin**	**Pin Function**	**Remark**
1	CAN-H	CAN2.0	25	Voltage Regulation Output	High Level
2	CAN-L	CAN2.0	26	2/4WD Switch	Low Level
3	Front Position Light	High Level	27	KL15 Input	High Level
4	/	/	28	/	/
5	/	/	29	/	/
6	Sound Speaker-	Low Level	30	Ignition Lock Start Position	Analog
7	Spotlight 1	High Level	31	Switch GND	Switch GND
8	Spotlight 2	High Level	32	GND	Power GND
9	Front LH Turn Ligt	High Level	33	/	/
10	Front RH Turn Ligt	High Level	34	KL30_1	Power
11	Drive 1-High Power	High Level	35	KL30_1	Power
12	Rear Position Light	High Level	36	RH High Beam	High Level
13	Spotlight 1 Switch	Low Level	37	Safety Belt	Low Level
14	Spotlight 2 Switch	Low Level	38	Trailer Power Connected Status	Low Level
15	Switch 1	Low Level	39	Brake Pedal Switch	High Level
16	Switch 2	Low Level	40	Hand Brake Switch	Low Level
17	Switch 3	Low Level	41	Switch 4	Low Level
18	Oil Pressure Low	Low Level	42	Switch 5	Low Level

© CFMOTO Powersports, Inc. This manual is subject to all applicable copyright laws. Reproduction or duplication in any form, whole or in part, is strictly prohibited.

19	Brake Fluid Failure	Low Level	43	Switch 6	Low Level
20	Front Axle Switch 1	Low Level	44	Backlight	High Level
21	Front Axle Switch2	Low Level	45	Rear LH Turn Light	High Level
22	KL30_1	Power	46	Rear RH Turn Light	High Level
23	KL30_1	Power	47	Horn	High Level
24	LH High Beam	High Level	48	PWM Drive 1-High Power	High Level

© CFMOTO Powersports, Inc. This manual is subject to all applicable copyright laws. Reproduction or duplication in any form, whole or in part, is strictly prohbited.

J2 Connector					
Pin	**Pin Function**	**Remark**	**Pin**	**Pin Function**	**Remark**
1	/	/	25	PWM Input 1	High Level
2	Switch 7	Low Level	26	PWM Input 2	High Level
3	Front Fog Light Switch	Low Level	27	PWM Input 3	High Level
4	Rear Fog Light Switch	Low Level	28	PWM Input 4	High Level
5	Low-beam Switch	High Level	29	Fuel Level Sensor Signal Acquisition	Analog
6	High-beam Switch	Low Level	30	Thermistor Signal Acquisition 4	Analog
7	Position Light Switch	High Level	31	Analog Sensor GND	Analog GND
8	/	/	32	GND	Power GND
9	/	/	33	/	/
10	/	/	34	KL30_2	Power
11	Brake Light	High Level	35	KL30_2	Power
12	Trailer Brake Light	High Level	36	Rear Fog Light	High Level
13	LH Turn Switch	Low Level	37	IG Relay	High Level
14	RH Turn Switch	Low Level	38	Power-saving Relay	High Level
15	Horn Switch	Analog	39	Drive 2-Low Power	High Level
16	Power-on Switch/SSB Switch	Analog	40	SSB Backlight lamp	High Level
17	Hazard Light Switch	Analog	41	SSB Indicator - Green	High Level
18	/	/	42	SSB Indicator - Orange	High Level
19	Thermistor Signal Acquisition 1	Analog	43	Auxiliary Start Relay	High Level
20	Thermistor Signal Acquisition 2	Analog	44	Drive 3-Low Power	High Level
21	Thermistor Signal Acquisition 3	Analog	45	Trailer Rear LH Turn Light	High Level
22	KL30_2	Power	46	Trailer Rear RH Turn Light	High Level
23	KL30_2	Power	47	PWM Drive 2-High Power	High Level
24	LH/RH Low Beam	High Level	48	PWM Drive 3-High Power	High Level

© CFMOTO Powersports, Inc. This manual is subject to all applicable copyright laws. Reproduction or duplication in any form, whole or in part, is strictly prohbited.

12.17.3 MMI Instrument
12.17.3.1 MMI Pin Function

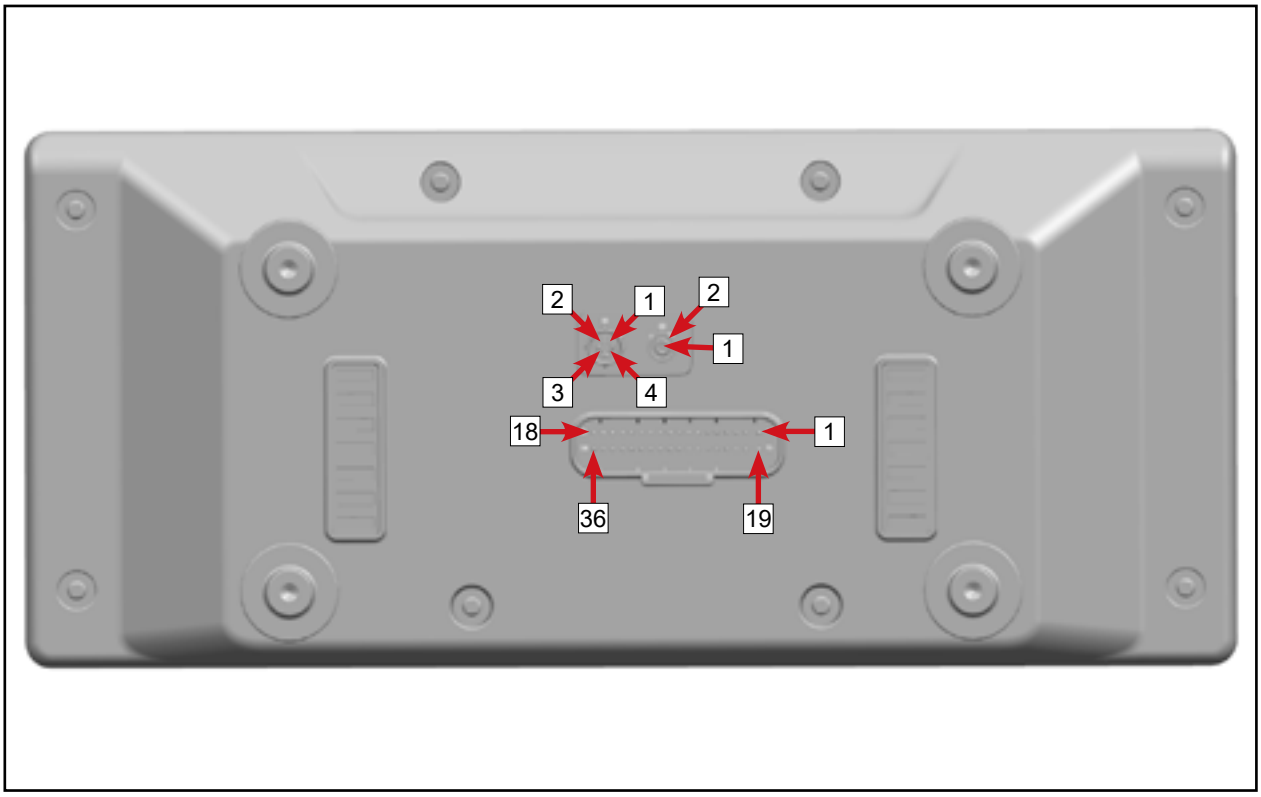

36-PIN Function			
Pin	Function	Pin	Function
1	GND	19	VBAT
2	Button 1 Up	20	Seat signal (low level)
3	Button 2 RH	21	RCA_FR
4	Button 3 Down	22	AGND
5	Button 4 LH	23	RCA_FL
6	Button 5 FN	24	RCA_RR
7	Button 6 Voice	25	AGND
8	Button 7 self-defined	26	RCA_RL
9	MIC1+	27	Amplifier control output
10	MIC1-	28	CAM_5V
11	MIC2+	29	GND
12	MIC2-	30	CAM signal
13	GND	31	CAM_GND
14	IGN	32	Buzz +
15	CAN_H	33	Buzz -
16	CAN_L	34	Parking signal (low level)
17	/	35	/
18	/	36	/

4-PIN Function	
Pin	Function
1	DP+
2	DP-
3	USB 5V
4	GND

2-PIN Function	
Pin	Function
1	Radio antenna input
2	Radio antenna GND

© CFMOTO Powersports, Inc. This manual is subject to all applicable copyright laws. Reproduction or duplication in any form, whole or in part, is strictly prohbited.

12.17.3.2 MMI Fault Code Table

NO.	DTC Code	DTC Mea	Fault Release Conditions	Possible Cause of the Fault	Service Suggestion
1	B111716	"Vehicle power supply voltage below threshold"	1.battery voltage >= 10V, and keep the status at least at t >= 500ms;	Battery voltage too low	Check power supply battery;
2	B111717	"Vehicle power supply voltage above threshold"	1.battery voltage <= 15V, and keep the status at least at t >= 500ms;	Battery voltage too high	Check power supply battery;
3	U220D00	"LimpHome DTC"	1.Received and sent ring message successfully at least once;	CAN bus circuit is short or open	Check the CAN bus circuit or EMC.
4	U007388	"CAN bus off fault of BICAN / MCAN"	"1.Message sent successfully;"	CAN bus circuit is short or open	Check the CAN bus circuit or EMC.
5	U010087	"Lost communication of ECM"	1.Received ECM(CANID= 0x108) message at least once;	CAN bus circuit is short or open	Check the CAN bus circuit or EMC.
6	U11C087	"Lost communication of BCM"	1.Received BCM(CANID=0x12A) message at least once;	CAN bus circuit is short or open	Check the CAN bus circuit or EMC.
7	U114687	"Lost communication of SCU"	1.Received SCU(CANID=0x15C) message at least once;	CAN bus circuit is short or open	Check the CAN bus circuit or EMC.
8	U114487	"Lost communication of EDS"	1.Received EDS(CANID=0x211) message at least once;	CAN bus circuit is short or open	Check the CAN bus circuit or EMC.
9	U110B87	"Lost communication of FAMD"	1.Received FAMD(CANID=0x22E) message at least once;	CAN bus circuit is short or open	Check the CAN bus circuit or EMC.

© CFMOTO Powersports, Inc. This manual is subject to all applicable copyright laws. Reproduction or duplication in any form, whole or in part, is strictly prohbited.

12.17.3.3 MMI Replacement

Procedures for updating data after replacing the MMI (new part):

1. Connect a DSCAN VCI to the OBD interface, and connect the VCI to the computer via the Type-C cable.
2. Ensure the diagnostic device is connected to the network.
3. Enter the DSCAN system and click the Settings icon in the upper right corner.
4. Verify that DSCAN is updated to the latest version. If not, update it to the latest version first.
5. Enter MODEL SELECTION and select the vehicle model.
6. Enter ECU LIST and select MMI.
7. Enter FUNCTIONS and select ‘After sales updates’.
8. In the ‘After sales update’ interface, click START to transfer the original data to the new MMI.

NOTE:
A pop-up will appear indicating that “the total mileage of the new instrument cluster supports a one-time update only and cannot be re-updated. Continue?”
Select "Yes" to continue with the subsequent steps.
Select "No" to complete the after-sales update process.

© CFMOTO Powersports, Inc. This manual is subject to all applicable copyright laws. Reproduction or duplication in any form, whole or in part, is strictly prohbited.

12.17.4 Speed Sensor

12.17.4.1 Speed Sensor Pin Definition

Pin	Definition
1	GND
2	Speed signal
3	Power+

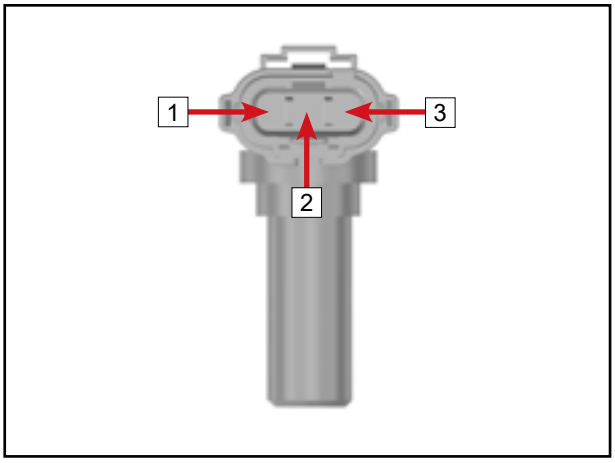

12.17.4.2 Speed Sensor Fault Diagnosis

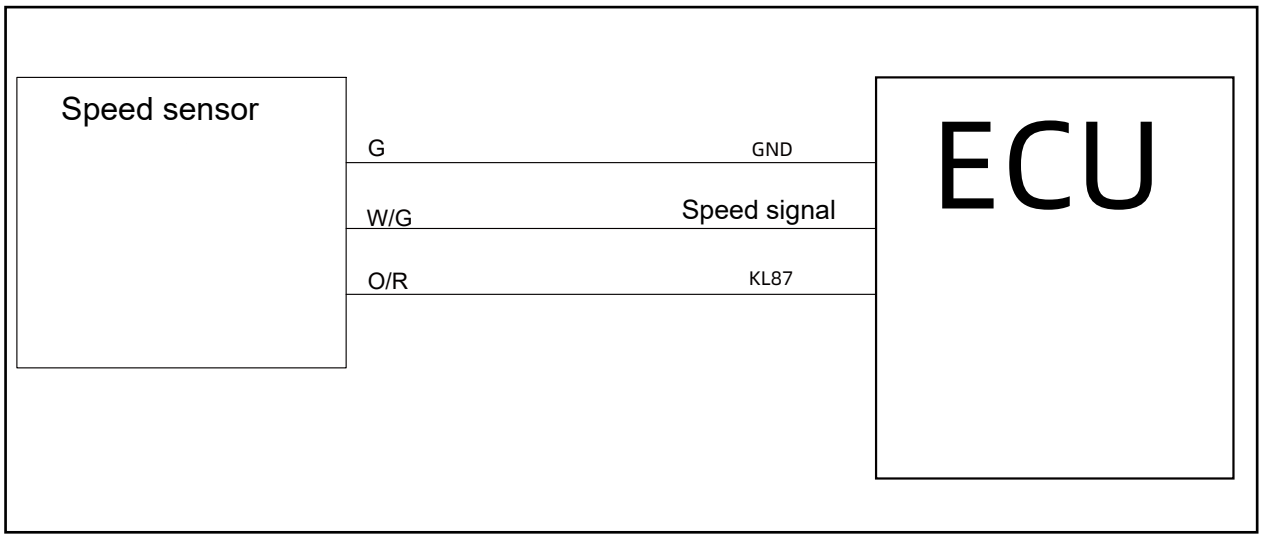

Harness Inspection

Use DSCAN to check the sensor voltage.
Check if the voltage display is around 0V.

NO → Intermittent failure, poor contact of the connector.

YES ↓

Sensor Power Inspection

Use the multimeter to connect the O/R and G wires.
Check whether the voltage is around 5-5.25V.

NO → Check whether O/R and G are short-circuited or open-circuited.
If there is no short circuit or open circuit, replace the ECU with a new one and recheck.

YES ↓

Replace with the new parts and then recheck.

© CFMOTO Powersports, Inc. This manual is subject to all applicable copyright laws. Reproduction or duplication in any form, whole or in part, is strictly prohibited.

12.17.5 Gear Sensor

12.17.5.1 Gear Sensor Pin Definition

Pin	Definition
1	Neutral
2	H gear
3	R gear
4	Park
5	L gear

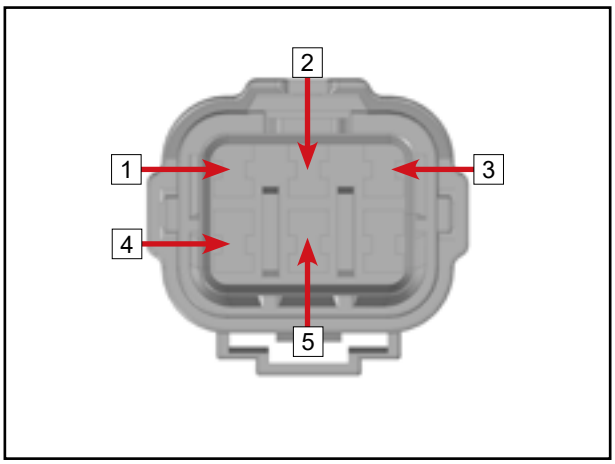

12.17.5.2 Gear Sensor Fault Diagnosis

When driving the vehicle, observe whether the gear position display on the instrument panel is normal. If it fails to display or shows an error, replace it with a new part and check again to see if the display is normal.

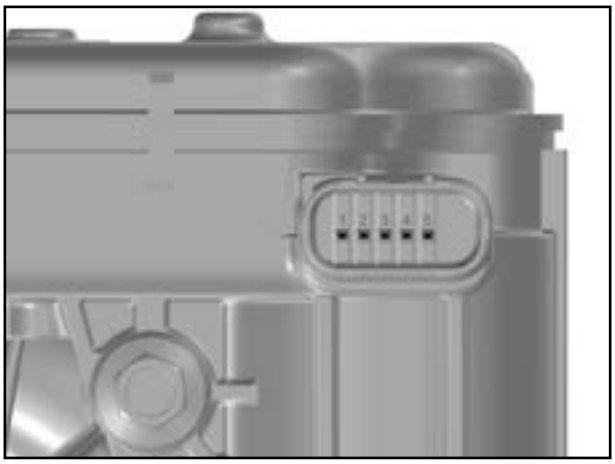

12.17.6 Turbocharger Exhaust Waste Gate

12.17.6.1 Exhaust Waste Gate Pin Definition

Pin	Definition	
1	GND	Sensor ground
2	OUT	Signal output (analog)
3	VCC	Sensor power supply
4	M+	Motor +
5	M-	Motor -

© CFMOTO Powersports, Inc. This manual is subject to all applicable copyright laws. Reproduction or duplication in any form, whole or in part, is strictly prohbited.

12.17.6.2 Exhaust Waste Gate Fault Diagnosis

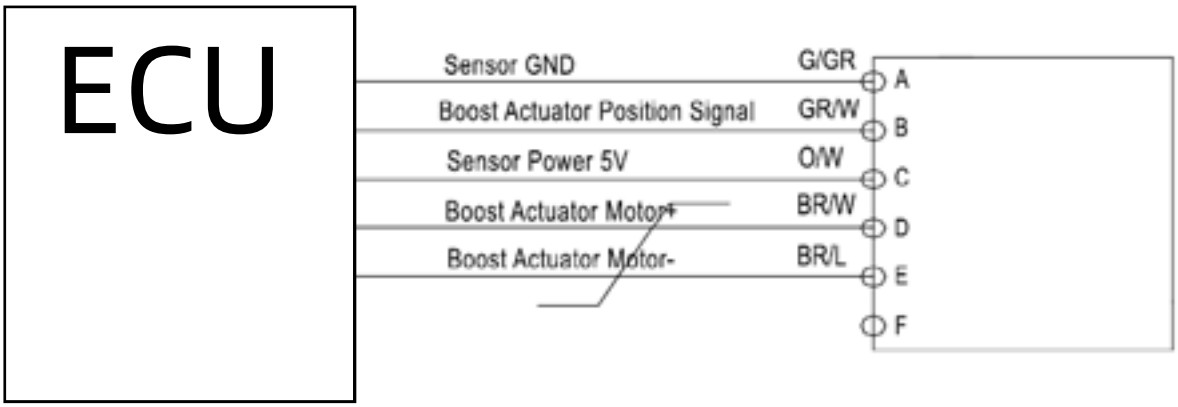

Harness Inspection

Use DSCAN to check the sensor voltage. Check if the voltage display is around 0V.

NO → Intermittent failure, poor contact of the connector.

YES ↓

Sensor Power Inspection

Use the multimeter to connect the O/W and G/GR wires. Check whether the voltage is around 5-5.25V.

NO → Check whether O/W and G/GR are short-circuited or open-circuited. If there is no short circuit or open circuit, replace the ECU with a new one and recheck.

YES ↓

Replace with the new parts and then recheck.

© CFMOTO Powersports, Inc. This manual is subject to all applicable copyright laws. Reproduction or duplication in any form, whole or in part, is strictly prohbited.

12.17.7 PEPS

12.17.7.1 PEPS Pin Function

Pin	Definition	Signal Type
1	/	/
2	CAN-L	/
3	CAN-H	/
4	/	/
5	Power+	Constant 12V Power
6	/	/
7	/	/
8	LIN	Serial communication
9	Reserved	/
10	/	/
11	Power-	/
12	/	/
13	/	/
14	/	/
15	KL_15	IG_ON Switch
16	/	/
17	/	/
18	/	/

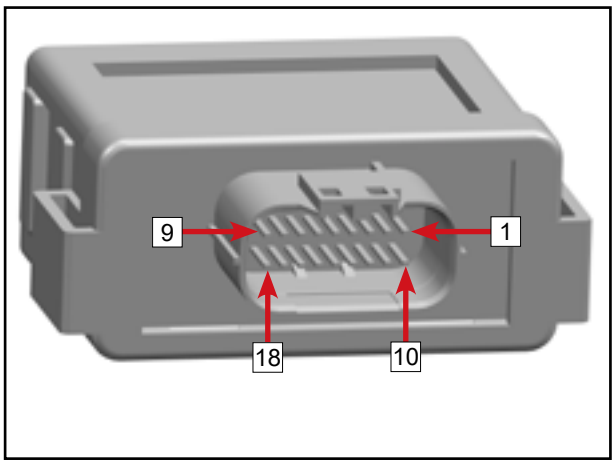

12.17.7.2 NFC Key Matching

1. Insert the new NFC key into the NFC reader 1.
2. Match the new NFC key with the vehicle using DSCAN.

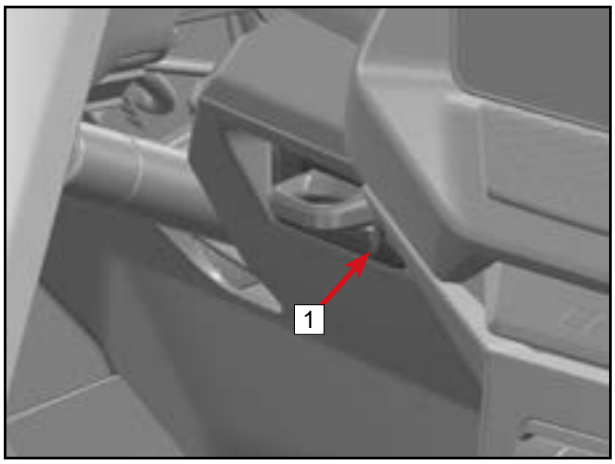

© CFMOTO Powersports, Inc. This manual is subject to all applicable copyright laws. Reproduction or duplication in any form, whole or in part, is strictly prohbited.

12.17.7.3 PEPS Fault Code Table

NO.	DTC Code	DTC Meaning	Fault Release Conditions	Possible Cause of the Fault	Service Suggestion
1	B111716	"Vehicle power supply voltage below threshold "	1.battery voltage >= 10V, and keep the status at least at t >= 500ms;	Battery voltage too low	Check power supply battery;
2	B111717	"Vehicle power supply voltage above threshold "	1.battery voltage <= 15V, and keep the status at least at t >= 500ms;	Battery voltage too high	Check power supply battery;
3	U007388	"CAN bus off fault of BICAN / MCAN "	"1.Message sent successfully"	CAN bus circuit is short or open	Check the CAN bus
4	U220D00	"LimpHome DTC "	1.Received and sent ring message successfully at least once;	CAN bus circuit is short or open	Check the CAN bus circuit or EMC.
5	U11C087	"Lost communication of BCM BCM"	1.Received BCM(CANID=0x12A) message at least once;	CAN bus circuit is short or open	Check the CAN bus circuit or EMC.
6	U010087	"Lost communication of ECM ECM"	1.Received ECM(CANID=0x108) message at least once;	CAN bus circuit is short or open	Check the CAN bus circuit or EMC.
7	U118287	"Lost communication of DASH\MMI DASH\MMI"	1.Received DASH\MMI(CANID=0x311) message at least once;	CAN bus circuit is short or open	Check the CAN bus circuit or EMC.
8	B140000	"Bluetooth communication error "	"Bluetooth communication is normal"	"Bluetooth fault of controller	"Replace the controller"
9	B140100	"PEPS IMMO authentication failed"	"1.PEPS IMMO authentication succeeded"	ESK not written or inconsistent	Write the correct ESK
10	B140200	"nfc communication error"	"nfc communication is normal"	"nfc or controller fault"	"Replace the controller or nfc"
11	U111087	Lost communication of GBC	1.Received GBC(CANID=0x129) message at least once;	CAN bus circuit is short or open	Check the CAN bus circuit or EMC.

© CFMOTO Powersports, Inc. This manual is subject to all applicable copyright laws. Reproduction or duplication in any form, whole or in part, is strictly prohbited.

12.17.8 Audio Amplifier

12.17.8.1 Audio Amplifier Pin Function

3-PIN Function	
Pin	**Pin Function**
1	12V
2	GND
3	Trigger Remote (Wake up)

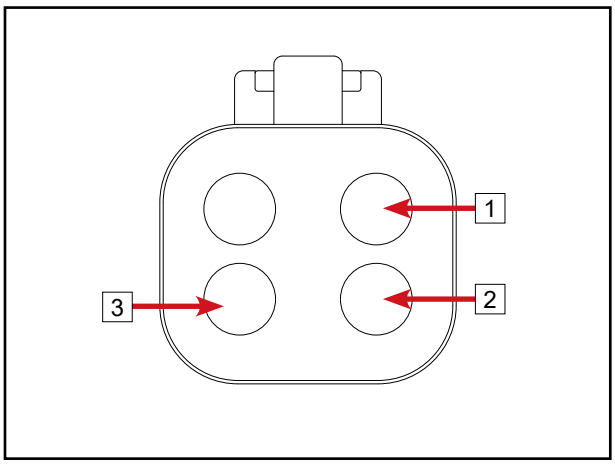

8-PIN Function (customer complaint)	
Pin	**Pin Function**
1	Front Speaker, Left +
2	Front Speaker, Left -
3	Front Speaker, Right +
4	Front Speaker, Right -
5	Rear Speaker, Right -
6	Rear Speaker, Right +
7	Rear Speaker, Left -
8	Rear Speaker, Left +

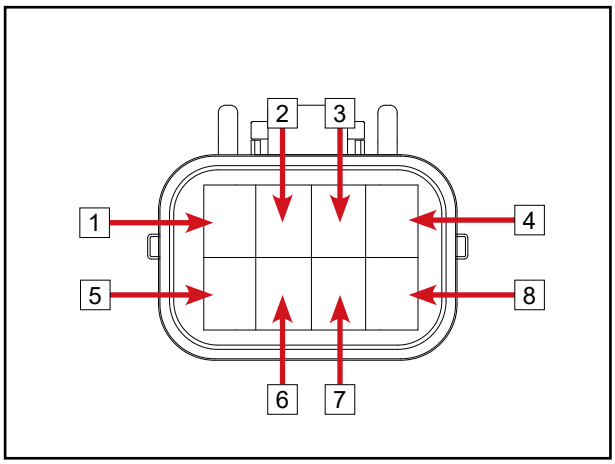

6-PIN Function	
Pin	**Pin Function**
1	Signal,Front Left+
2	Signal,Front Right+
3	Signal,Front-
4	Signal,Rear-
5	Signal,Rear Right+
6	Signal,Rear Left+

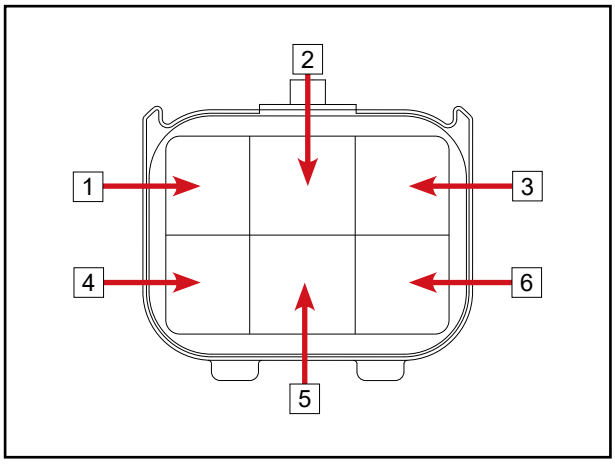

© CFMOTO Powersports, Inc. This manual is subject to all applicable copyright laws. Reproduction or duplication in any form, whole or in part, is strictly prohbited.

12.17.9 Camshaft Sensor

12.17.9.1 Camshaft Sensor Pin Function

Pin	Function
1	Power supply+
2	Output
3	GND-

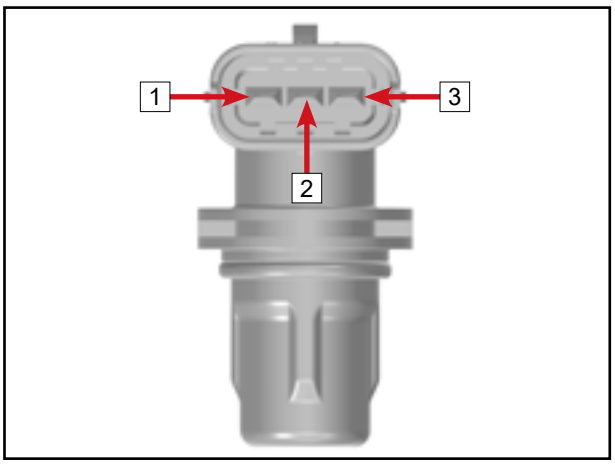

12.17.9.2 Camshaft Sensor Voltage Inspection

1. Connect the terminals of wire harness with the multimeter as shown in the image.
2. Unlock the vehicle and turn on the ignition switch.
3. Check if the voltage value shows around 5V.

If there is no voltage display or the voltage display is too low or too high, check whether the wiring harness is open-circuited or short-circuited. Check if the battery is discharged.

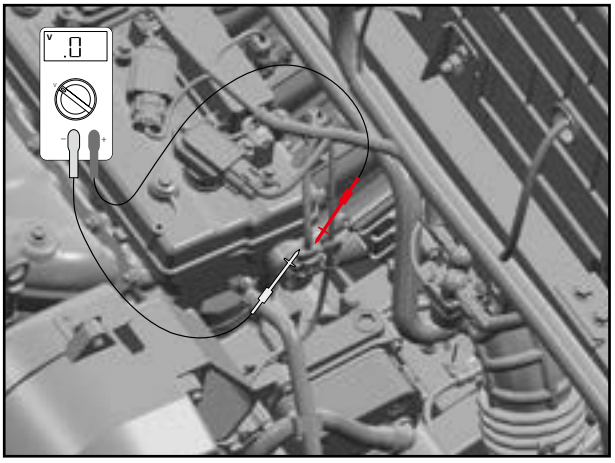

12.17.10 Boost Pressure Temperature Sensor

12.17.10.1 Boost Pressure Temperature Sensor Pin Definition

Pin	Definition
1	GND
2	NTC
3	Input voltage
4	Pressure signal output

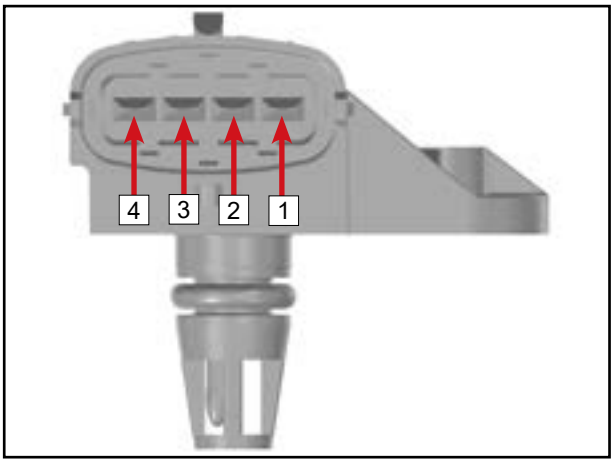

© CFMOTO Powersports, Inc. This manual is subject to all applicable copyright laws. Reproduction or duplication in any form, whole or in part, is strictly prohibited.

12.17.10.2 Boost Pressure Temperature Sensor Fault Diagnosis

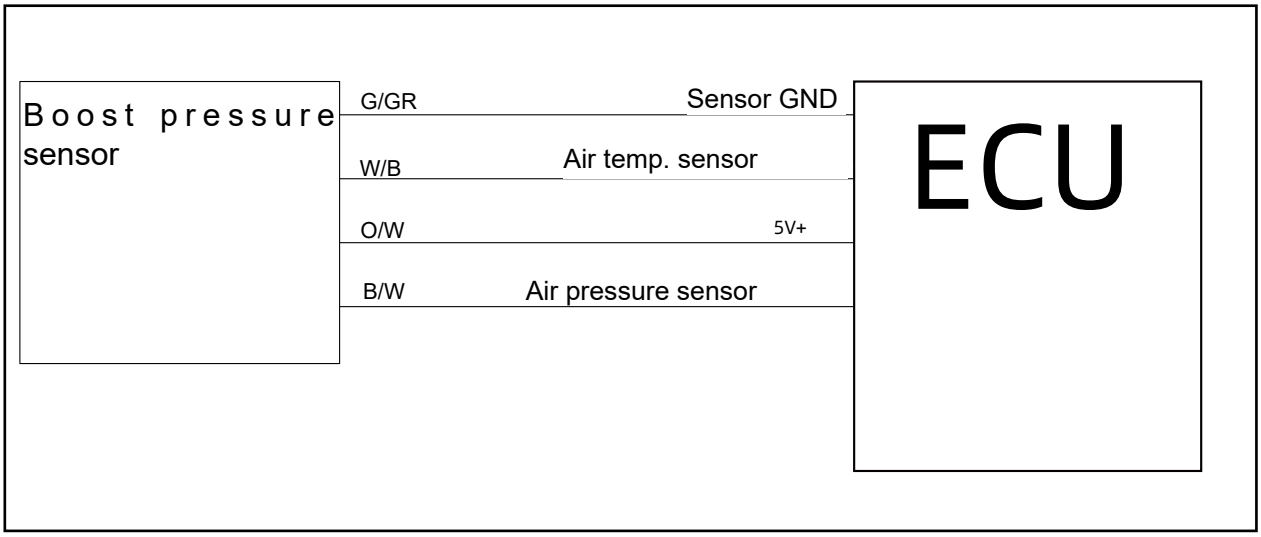

Harness Inspection

Use DSCAN to check the sensor voltage. Check if the voltage display is around 0V.

NO → Intermittent failure, poor contact of the connector.

YES ↓

Sensor Power Inspection

Use the multimeter to connect the O/W and G/GR wires. Check whether the voltage is around 5-5.25V.

NO → Check whether O/W and G/GR are short-circuited or open-circuited. If there is no short circuit or open circuit, replace the ECU with a new one and re-check.

YES ↓

Replace with the new parts and then recheck.

© CFMOTO Powersports, Inc. This manual is subject to all applicable copyright laws. Reproduction or duplication in any form, whole or in part, is strictly prohibited.

12.17.11 Dashboard
12.17.11.1 Dashboard Pin Function

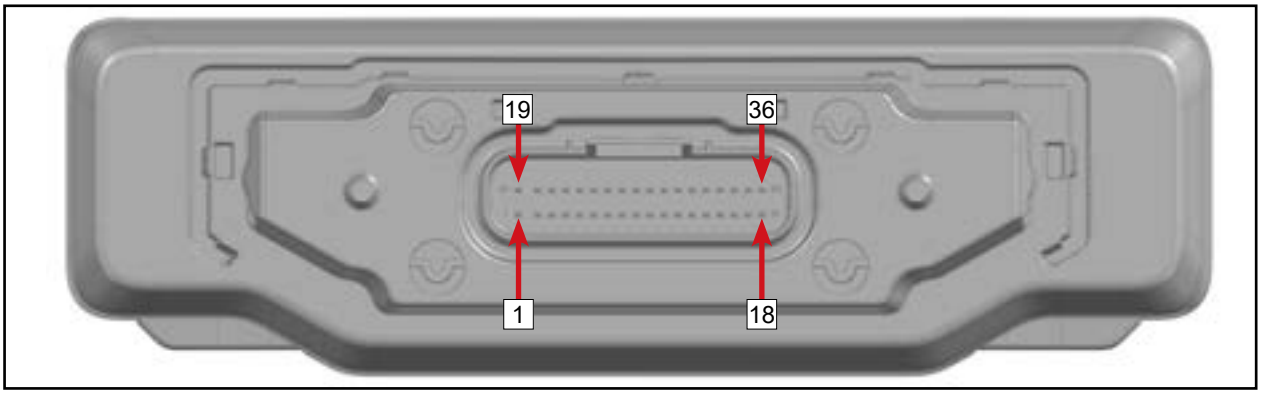

Pin	Function	Description
1	Power negative	Power GND
2	Brake failure signal	Low side control signal (reserved)
3	ABS warning light	Low side control signal (reserved)
4	EFI fault light	Low side control signal (reserved)
5	Switch rear gear case signal	Low side control signal (reserved)
6	Mode switch signal	Low side control signal (reserved)
7	Speed limit signal	Resistance signal (reserved)
8	/	High side control signal (reserved)
9	LH turn light signal	High side control signal (reserved)
10	RH turn light signal	High side control signal (reserved)
11	Motor 4WD lock signal	Low side control signal (reserved)
12	Switch 2WD signal	Low side control signal (reserved)
13	N gear	Low side control signal (reserved)
14	E-door lock	High side control signal
15	CAN-H	CAN signal
16	CAN-L	CAN signal
17	Switch 4WD lock signal	Low side control signal (reserved)
18	Fuel signal	Resistance signal (reserved)
19	Power Positive	Power +
20	Seat sensor signal	Low side control signal
21	2WD signal	Low side control signal (reserved)
22	4WD signal	Low side control signal (reserved)
23	Position light signal	High side control signal (reserved)
24	High-beam light signal	High side control signal (reserved)
25	Oil pressure signal	Low side control signal (reserved)
26	Seat belt warning signal	Low side control signal (reserved)
27	EPS fault signal	Low side control signal (reserved)
28	L gear	Low side control signal (reserved)
29	H gear	Low side control signal (reserved)
30	P gear	Low side control signal (reserved)
31	R gear	Low side control signal (reserved)
32	Buzzer +	Buzzer positive
33	Buzzer -	Buzzer negative
34	Parking signal (handbrake)	Low side control signal
35	Speed signal	Voltage pulsing signal (reserved)
36	Keyless indicator signal	High side control signal (reserved)

© CFMOTO Powersports, Inc. This manual is subject to all applicable copyright laws. Reproduction or duplication in any form, whole or in part, is strictly prohibited.

12.18 Fault Code Diagnostics
12.18.1 ECM Fault Code Table

No.	DTC	DTC Meaning
1	B111716	Vehicle power supply voltage below threshold
2	B111717	Vehicle power supply voltage above threshold
3	U220D00	LimpHome DTC
4	U007388	CAN bus off fault of BICAN / MCAN
5	U11C087	Lost communication of BCM
6	U11C487	Lost communication of PMS/PEPS
7	U118287	Lost communication of DASH\MMI
8	P064500	A/C Clutch Relay Control Circuit Open A/C
9	P064700	A/C Clutch Relay Control Circuit High A/C
10	P064600	A/C Clutch Relay Control Circuit Low A/C
11	P057100	Brake Switch "A" Circuit
12	P050400	Brake Switch "A"/"B" Correlation
13	P142000	CAN Module Hardware Response Time Out
14	P011800	Engine Coolant Temperature Sensor 1 Circuit High
15	P011700	Engine Coolant Temperature Sensor 1 Circuit Low
16	P151000	Knock Control Signal Evaluation Check Diagnostic Fault Detected
17	P208900	"A" Camshaft Position Actuator Control Circuit High Bank 1
18	P208800	"A" Camshaft Position Actuator Control Circuit Low Bank 1
19	P001000	"A" Camshaft Position Actuator Control Circuit Open Bank 1
20	P000A00	"A" Camshaft Position Slow Response Bank 1
21	P003C00	"A" Camshaft Profile Control Performance/Stuck Off Bank 1
22	P026200	Cylinder 1 Injector "A" Circuit High
23	P026100	Cylinder 1 Injector "A" Circuit Low
24	P020100	Cylinder 1 Injector "A" Circuit
25	P026800	Cylinder 3 Injector ""A"" Circuit High
26	P026700	Cylinder 3 Injector ""A"" Circuit Low
27	P020300	Cylinder 3 Injector ""A"" Circuit
28	P026500	Cylinder 2 Injector ""A"" Circuit High
29	P026400	Cylinder 2 Injector ""A"" Circuit Low
30	P020200	Cylinder 2 Injector ""A"" Circuit
31	P034100	Camshaft Position Sensor "A" Circuit Range/Performance Bank 1 or Single Sensor
32	P001676	Crankshaft Position - Camshaft Position Correlation Bank 1 Sensor A
33	P034300	Camshaft Position Sensor ""A"" Circuit High Bank 1 or Single Sensor
34	P034200	Camshaft Position Sensor ""A"" Circuit Low Bank 1 or Single Sensor
35	P001678	Crankshaft Position - Camshaft Position Correlation Bank 1 Sensor A
36	P033900	Crankshaft Position Sensor ""A"" Circuit Intermittent
37	P261700	Crankshaft Position Signal Output Circuit Open
38	P048000	Fan 1 Control Circuit
39	P048100	Fan 2 Control Circuit
40	P069200	Fan 1 Control Circuit High
41	P069400	Fan 2 Control Circuit High
42	P069100	Fan 1 Control Circuit Low
43	P069300	Fan 2 Control Circuit Low
44	P013200	O2 Sensor Circuit High Voltage Bank 1 Sensor 1
45	P013100	O2 Sensor Circuit Low Voltage Bank 1 Sensor 1

© CFMOTO Powersports, Inc. This manual is subject to all applicable copyright laws. Reproduction or duplication in any form, whole or in part, is strictly prohbited.

No.	DTC	DTC Meaning
46	P223100	O2 Sensor Signal Circuit Shorted to Heater Circuit Bank 1 Sensor 1
47	P013400	O2 Sensor Circuit No Activity Detected Bank 1 Sensor 1
48	P005300	HO2S Heater Resistance Bank 1 Sensor 1
49	P003200	HO2S Heater Control Circuit High Bank 1 Sensor 1
50	P003100	HO2S Heater Control Circuit Low Bank 1 Sensor 1
51	P003000	HO2S Heater Control Circuit Bank 1 Sensor 1
52	P011300	Intake Air Temperature Sensor 1 Circuit High Bank 1
53	P011200	Intake Air Temperature Sensor 1 Circuit Low Bank 1
54	P062900	Fuel Pump “A” Control Circuit High
55	P062800	Fuel Pump “A” Control Circuit Low
56	P062700	Fuel Pump “A” Control Circuit Open
57	P032600	Knock/Combustion Vibration Sensor 1 Circuit Range/Performance Bank 1 or Single Sensor
58	P032500	Knock/Combustion Vibration Sensor 1 Circuit Bank 1 or Single Sensor
59	P032800	Knock/Combustion Vibration Sensor 1 Circuit High Bank 1 or Single Sensor
60	P032700	Knock/Combustion Vibration Sensor 1 Circuit Low Bank 1 or Single Sensor
61	P032815	Knock/Combustion Vibration Sensor 1 Circuit High Bank 1 or Single Sensor
62	P032714	Knock/Combustion Vibration Sensor 1 Circuit Low Bank 1 or Single Sensor
63	P154000	Engine Torque Control Adaption at Limit
64	P030100	Cylinder 1 Misfire Detected
65	P030300	Cylinder 3 Misfire Detected
66	P030200	Cylinder 2 Misfire Detected
67	P036300	Misfire Detected - Fueling Disabled
68	P158200	MCU Temperature Out of Range
69	P158400	Safety Cores Out of Sync During Lockstep (RCCU0a)
70	P158500	Safety Cores Out of Sync During Lockstep (RCCU0b ... RCCU0e, RCCU1) lockstep
71	P158600	Reset Request From Software Watchdog of Peripheral Core_2 domain
72	P158700	Reset Request From Software Watchdog timer1
73	P158800	First Timeout Interrupt Request From Software Watchdog of Safety Core (Main Core_0)
74	P158900	Second Timeout (reset) Request from Software Watchdog of Safety Core (Main Core_0)
75	P158A00	Uncorrectable Errors In System RAMs
76	P158B00	Voltage Out of Rrange Indication From HVDs
77	P158C00	Uncorrectable Errors In Peripheral RAMs
78	P158D00	Uncorrectable Errors In Flash Memory
79	P158E00	Fault in SMPU_0 or SMPU_1 logic fault Memory
80	P159000	Digital PMC Initialization Error During DCF Data Load
81	P159100	PLL1 Loss of Lock PLL1
82	P159200	Loss of XOSC Clock
83	P159500	Exception from Monitoring Internal Clocks of Component subsystems
84	P159600	Exception from Monitoring Internal Clocks of Other Subsystems
85	P159700	A Hardware Fault in the ECC Logic of the Flash Memory

© CFMOTO Powersports, Inc. This manual is subject to all applicable copyright laws. Reproduction or duplication in any form, whole or in part, is strictly prohibited.

No.	DTC	DTC Meaning
86	P159800	Hardware Fault in the Flash Memory Controller Flash memory
87	P159900	Fault During Timing/Repair Configuration Initialization by SSCM of Different Memories
88	P159A00	An addressing error in system RAM or a write error in the RAM controller
89	P159B00	The Prevention of An Unauthorized Access by SMPU_0 or SMPU_1. Memory
90	P159C00	Fault in the Controller PRAMC of the System RAM
91	P159D00	SSCM Transfer Error (During the SSCM And STCU DCF Loading), or Flash Memory Initialization Error
92	P159E00	Disabled Checker Core or RCCUs
93	P159F00	Reset Request from Security Watchdog security
94	P068500	ECM/PCM Power Relay Control Circuit Open
95	P068700	ECM/PCM Power Relay Control Circuit High
96	P068600	ECM/PCM Power Relay Control Circuit Low
97	P153000	Function Monitoring: Fault of ECU ADC - Null Load Test Pulse
98	P153100	Function Monitoring: Fault of ECU ADC - Test Voltage
99	P157100	Function Monitoring:Powerstage and/or Communication Error During Shut Off Path Test
100	P060D00	Internal Control Module Accelerator Pedal Position Performance
101	P152000	Function Monitoring: Check of Predicted Air Mass Failed
102	P152100	Function Monitoring: Fault of ECU Check of Injection Cut-off
103	P152200	Function Monitoring: Fault of ECU in Check of Cylinder Individual Fuel Corrections
104	P061C00	Internal Control Module Engine RPM Performance
105	P152300	Function Monitoring: Fault of ECU or Sensor in Mixture Check
106	P152700	Function Monitoring: Monitoring of ICO From Level1
107	P152800	Function Monitoring: Monitoring of ICO From Level2
108	P152400	Function Monitoring: Fault of ECU Comparison of Lambda and Operation Mode
109	P152500	Function Monitoring: Fault of ECU or Sensor in rl-Comparison
110	P152900	Function Monitoring: Fault of Starter Control
111	P061A00	Internal Control Module Torque Performance
112	P152600	Function Monitoring: Fault of ECU Ignition Timing
113	P001100	"A" Camshaft Position - Timing Over-Advanced or System Performance Bank 1
114	P157200	Status of ABE Line is Active and Normal Operation Voltage is Present
115	P157300	WDA active Due to Errors in Query/Response Communication
116	P157400	Error PIN is Active and No Query Response Communication Error is Active
117	P157500	WDA active Due to Overvoltage Detection
118	P222900	Barometric Pressure Sensor ""A"" Circuit High
119	P222800	Barometric Pressure Sensor ""A"" Circuit Low
120	P222729	Barometric Pressure Sensor ""A"" Circuit Range/Performance
121	P010800	Manifold Absolute Pressure Sensor Circuit High
122	P010700	Manifold Absolute Pressure Sensor Circuit Low
123	P212300	Throttle/Pedal Position Sensor/Switch “D” Circuit High
124	P212800	Throttle/Pedal Position Sensor/Switch “E” Circuit High

© CFMOTO Powersports, Inc. This manual is subject to all applicable copyright laws. Reproduction or duplication in any form, whole or in part, is strictly prohbited.

No.	DTC	DTC Meaning
125	P212200	Throttle/Pedal Position Sensor/Switch “D” Circuit Low
126	P212700	Throttle/Pedal Position Sensor/Switch “E” Circuit Low
127	P064100	Sensor Reference Voltage A Circuit Open
128	P065100	Sensor Reference Voltage B Circuit Open
129	P069700	Sensor Reference Voltage ""C"" Circuit Open
130	P061500	Starter Relay “A” Circuit
131	P061700	Starter Relay “A” Circuit High
132	P061600	Starter Relay “A” Circuit Low
133	P213800	Throttle/Pedal Position Sensor/Switch “D”/“E” Voltage Correlation
134	P045900	Evaporative Emission System Purge Control Valve Circuit High
135	P045800	Evaporative Emission System Purge Control Valve Circuit Low
136	P044400	Evaporative Emission System Purge Control Valve Circuit Open
137	P155100	Not Plausible Error of UMA Learning
138	P155000	Break of DV-E Adapation Due to Ambient Conditions
139	P155600	Max Error of DV-E Fault During Relearning of UMA
140	P155700	Min Error of DV-E Fault During Relearning of UMA
141	P156100	Not Plausible Error of DV-E Position Deviation
142	P156000	Not Plausible Range of DV-E Control
143	P155800	Not Plausible Offset of NLP Learning for First Learning
144	P155900	Max Error of NLP Learning
145	P155A00	Not Plausible Offset of NLP Learning for Last Learning
146	P155B00	Min Error of NLP Learning
147	P210000	Throttle Actuator "A" Control Motor Circuit/Open
148	P211800	Throttle Actuator "A" Control Motor Current Range/Performance
149	P155400	Max Error of DV-E Return Spring Check Failure
150	P155500	Throttle Actuator Electrical Malfunction
151	P012300	Throttle/Pedal Position Sensor/Switch "A" Circuit High
152	P012200	Throttle/Pedal Position Sensor/Switch "A" Circuit Low
153	P012100	Throttle/Pedal Position Sensor/Switch "A" Circuit Range/Performance
154	P022300	Throttle/Pedal Position Sensor/Switch "B" Circuit High
155	P022200	Throttle/Pedal Position Sensor/Switch "B" Circuit Low
156	P022100	Throttle/Pedal Position Sensor/Switch "B" Circuit Range/Performance
157	P210300	Throttle Actuator ""A"" Control Motor Circuit High
158	P210600	Throttle Actuator Control System Forced Limited Power
159	P121200	Vehicle Speed Sensor ""A"" Circuit Range/Performance
160	P050300	Vehicle Speed Sensor ""A"" Circuit Intermittent/Erratic/High
161	P050167	Vehicle Speed Sensor "A" Circuit Range/Performance
162	P261000	ECM/PCM Engine Off Timer Performance
163	P06869E	ECM/PCM Power Relay Control Circuit Low ECM/PCM
164	P06B842	Internal Control Module Non-Volatile Random Access Memory (NVRAM) Error
165	P06B843	Internal Control Module Non-Volatile Random Access Memory (NVRAM) Error
166	P142800	LIN1 Header Time Out Error
167	P141400	Read back time out error of LIN bus (contact between EMS and intellectual generator)

© CFMOTO Powersports, Inc. This manual is subject to all applicable copyright laws. Reproduction or duplication in any form, whole or in part, is strictly prohibited.

No.	DTC	DTC Meaning
168	P141600	Framing error of LIN bus (contact between EMS and intellectual generator)
169	P142100	LIN Module Hardware Response Time Out

12.18.2 BCM Fault Code Table

No.	DTC Display Code	DTC Meaning	Fault Release Conditions	Possible Cause of the Fault	Service Suggestion
1	B111716	Vehicle power supply voltage below threshold	1.battery voltage >= 10V, and keep the status at least at t >= 500ms;	Battery voltage too low	Check power supply battery;
2	B111717	Vehicle power supply voltage above threshold	1.battery voltage <= 15V, and keep the status at least at t >= 500ms;	Battery voltage too high	Check power supply battery;
3	U220D00	LimpHome DTC	1.Received and sent ring message successfully at least once;	CAN bus circuit is short or open	Check the CAN bus circuit or EMC.
4	U007388	CAN bus off fault of BICAN / MCAN	1.Message sent successfully;	CAN bus circuit is short or open	Check the CAN bus circuit or EMC.
5	U010087	Lost communication of ECM	1.Received ECM_DrvInfo (CANID=0x108) message at least once;	CAN bus circuit is short or open	Check the CAN bus circuit or EMC.
6	U11C487	Lost communication of PEPS	1.PEPS_Key (CANID=0x204) message at least once;	CAN bus circuit is short or open	Check the CAN bus circuit or EMC.
7	U118287	Lost communication of DASH\MMI	1.Received DASH\ MMI (CANID=0x311) message at least once;	CAN bus circuit is short or open	Check the CAN bus circuit or EMC.
8	B100913	IG relay open circuit	This normal circuit has been detected for 3 consecutive times or more.	Wiring harness failure or the load failure.	Check the wiring harness and the load.
9	B100911	IG relay short circuit	This normal circuit has been detected for 3 consecutive times or more.	Wiring harness failure or the load failure.	Check the wiring harness and the load.

© CFMOTO Powersports, Inc. This manual is subject to all applicable copyright laws. Reproduction or duplication in any form, whole or in part, is strictly prohbited.

No.	DTC Display Code	DTC Meaning	Fault release conditions	Possible cause of the fault	Service suggestion
10	B101513	horn open circuit	This normal circuit has been detected for 3 consecutive times or more.	Wiring harness failure or the load failure.	Check the wiring harness and the load.
11	B101511	horn short circuit	This normal circuit has been detected for 3 consecutive times or more.	Wiring harness failure or the load failure.	Check the wiring harness and the load.
12	B110113	Front left turn lamp open circuit	This normal circuit has been detected for 3 consecutive times or more.	Wiring harness failure or the load failure.	Check the wiring harness and the load.
13	B110111	Front left turn signal lamp short circuit	This normal circuit has been detected for 3 consecutive times or more.	Wiring harness failure or the load failure.	Check the wiring harness and the load.
14	B110213	Front turn right lamp open circuit	This normal circuit has been detected for 3 consecutive times or more.	Wiring harness failure or the load failure.	Check the wiring harness and the load.
15	B110211	Front right turn signal lamp short circuit	This normal circuit has been detected for 3 consecutive times or more.	Wiring harness failure or the load failure.	Check the wiring harness and the load.
16	B110313	Rear left turn lamp open circuit	This normal circuit has been detected for 3 consecutive times or more.	Wiring harness failure or the load failure.	Check the wiring harness and the load.
17	B110311	Rear left turn signal lamp short circuit	This normal circuit has been detected for 3 consecutive times or more.	Wiring harness failure or the load failure.	Check the wiring harness and the load.
18	B110413	Rear right turn lamp open circuit	This normal circuit has been detected for 3 consecutive times or more.	Wiring harness failure or the load failure.	Check the wiring harness and the load.
19	B110411	Rear right turn signal lamp short circuit	This normal circuit has been detected for 3 consecutive times or more.	Wiring harness failure or the load failure.	Check the wiring harness and the load.
20	B110513	Low beam open circuit	This normal circuit has been detected for 3 consecutive times or more.	Wiring harness failure or the load failure.	Check the wiring harness and the load.

© CFMOTO Powersports, Inc. This manual is subject to all applicable copyright laws. Reproduction or duplication in any form, whole or in part, is strictly prohbited.

No.	DTC Display Code	DTC Meaning	Fault release conditions	Possible cause of the fault	Service suggestion
21	B110511	Low beam lamp short circuit	This normal circuit has been detected for 3 consecutive times or more.	Wiring harness failure or the load failure.	Check the wiring harness and the load.
22	B110613	High beam open circuit	This normal circuit has been detected for 3 consecutive times or more.	Wiring harness failure or the load failure.	Check the wiring harness and the load.
23	B110611	High beam short circuit	This normal circuit has been detected for 3 consecutive times or more.	Wiring harness failure or the load failure.	Check the wiring harness and the load.
24	B110913	R fog light open circuit	This normal circuit has been detected for 3 consecutive times or more.	Wiring harness failure or the load failure.	Check the wiring harness and the load.
25	B110911	R fog lamp short circuit	This normal circuit has been detected for 3 consecutive times or more.	Wiring harness failure or the load failure.	Check the wiring harness and the load.
26	B110A11	F Position lamp short circuit	This normal circuit has been detected for 3 consecutive times or more.	Wiring harness failure or the load failure.	Check the wiring harness and the load.
27	B110B11	R Position lamp short circuit	This normal circuit has been detected for 3 consecutive times or more.	Wiring harness failure or the load failure.	Check the wiring harness and the load.
28	B110C13	Trailer left rear turn signal open circuit	This normal circuit has been detected for 3 consecutive times or more.	Wiring harness failure or the load failure.	Check the wiring harness and the load.
29	B110C11	Tow truck left back turn short circuit	This normal circuit has been detected for 3 consecutive times or more.	Wiring harness failure or the load failure.	Check the wiring harness and the load.
30	B110D13	Trailer right rear turn signal open circuit	This normal circuit has been detected for 3 consecutive times or more.	Wiring harness failure or the load failure.	Check the wiring harness and the load.
31	B110D11	Tow truck right back turn short circuit	This normal circuit has been detected for 3 consecutive times or more.	Wiring harness failure or the load failure.	Check the wiring harness and the load.

© CFMOTO Powersports, Inc. This manual is subject to all applicable copyright laws. Reproduction or duplication in any form, whole or in part, is strictly prohbited.

No.	DTC Display Code	DTC Meaning	Fault release conditions	Possible cause of the fault	Service suggestion
32	B111011	Background light short circuit	This normal circuit has been detected for 3 consecutive times or more.	Wiring harness failure or the load failure.	Check the wiring harness and the load.
33	B111113	Brake lamp open circuit	This normal circuit has been detected for 3 consecutive times or more.	Wiring harness failure or the load failure.	Check the wiring harness and the load.
34	B111111	Brake lamp short circuit	This normal circuit has been detected for 3 consecutive times or more.	Wiring harness failure or the load failure.	Check the wiring harness and the load.
35	B110E11	Driver seat heating open circuit	This normal circuit has been detected for 3 consecutive times or more.	Wiring harness failure or the load failure.	Check the wiring harness and the load.
36	B110E11	Driver seat heating short circuit	This normal circuit has been detected for 3 consecutive times or more.	Wiring harness failure or the load failure.	Check the wiring harness and the load.
37	B110F13	Passenger seat heating open circuit	This normal circuit has been detected for 3 consecutive times or more.	Wiring harness failure or the load failure.	Check the wiring harness and the load.
38	B110F11	Passenger seat heating short circuit	This normal circuit has been detected for 3 consecutive times or more.	Wiring harness failure or the load failure.	Check the wiring harness and the load.
39	B100111	Oil level sensor short circuit	This normal circuit has been detected for 3 consecutive times or more.	Wiring harness failure or the load failure.	Check the wiring harness and the load.
40	B100113	Oil level sensor open circuit	This normal circuit has been detected for 3 consecutive times or more.	Wiring harness failure or the load failure.	Check the wiring harness and the load.

© CFMOTO Powersports, Inc. This manual is subject to all applicable copyright laws. Reproduction or duplication in any form, whole or in part, is strictly prohbited.

No.	DTC Display Code	DTC Meaning	Fault release conditions	Possible cause of the fault	Service suggestion
41	B100401	IG relay contact adhesion fault	This normal circuit has been detected for 3 consecutive times or more.	The load failure.	Check the load.
42	B111713	Trailer brake lamp open circuit	This normal circuit has been detected for 3 consecutive times or more.	Wiring harness failure or the load failure.	Check the wiring harness and the load.
43	B111711	Trailer brake lamp short circuit	This normal circuit has been detected for 3 consecutive times or more.	Wiring harness failure or the load failure.	Check the wiring harness and the load.

© CFMOTO Powersports, Inc. This manual is subject to all applicable copyright laws. Reproduction or duplication in any form, whole or in part, is strictly prohbited.

12.18.3 DASH Fault Code Table

No.	DTC Display Code	DTC Meaning	Fault release conditions	Possible cause of the fault	Service suggestion
1	B111716	Vehicle power supply voltage below threshold	1.battery voltage >= 10V, and keep the status at least at t >= 500ms;	Battery voltage too low	Check power supply battery;
2	B111717	Vehicle power supply voltage above threshold	1.battery voltage <= 15V, and keep the status at least at t >= 500ms;	Battery voltage too high	Check power supply battery;
3	U007388	CAN bus off fault of BICAN / MCANBICAN / MCANBusOff	1.Message sent successfully;	CAN bus circuit is short or open	Check the CAN bus circuit or EMC.
4	U220D00	LimpHome DTC	1.Received and sent ring message successfully at least once;	CAN bus circuit is short or open	Check the CAN bus circuit or EMC.
5	U010087	Lost communication of ECM	1.Received ECM(CANID=0x108) message at least once;	CAN bus circuit is short or open	Check the CAN bus circuit or EMC.
6	U11C087	Lost communication of BCM	1.Received BCM(CANID=0x12A) message at least once;	CAN bus circuit is short or open	Check the CAN bus circuit or EMC.
7	U11C487	Lost communication of PMS/PEPS PMS/PEPS	1.Received PEPS(CANID=0x204) message at least once;	CAN bus circuit is short or open	Check the CAN bus circuit or EMC.
8	U114487	Lost communication of EDS	1.Received EDS(CANID=0x211) message at least once;	CAN bus circuit is short or open	Check the CAN bus circuit or EMC.
9	U110B87	Lost communication of FAMD	1.Received FAMD(CANID=0x22E) message at least once;	CAN bus circuit is short or open	Check the CAN bus circuit or EMC.

© CFMOTO Powersports, Inc. This manual is subject to all applicable copyright laws. Reproduction or duplication in any form, whole or in part, is strictly prohibited.

12.18.4 EDS Fault Code Table

No.	DTC Display Code	DTC Meaning	Fault release conditions	Possible cause of the fault	Service suggestion
1	B111716	Vehicle power supply voltage below threshold	1.battery voltage >= 10V, and keep the status at least at t >= 500ms	Battery voltage too low	Check power supply battery;
2	B111717	Vehicle power supply voltage above threshold	1.battery voltage <= 15V, and keep the status at least at t >= 500ms	Battery voltage too high	Check power supply battery;
3	U007388	CAN bus off fault of BICAN / MCAN BICAN / MCANBusOff"	1.Message sent successfully;	CAN bus circuit is short or open	Check the CAN bus circuit or EMC.
4	U010087	Lost communication of ECM	1.Received ECM(CANID=0x108) message at least once;	CAN bus circuit is short or open	"Check the CAN bus circuit or EMC.
5	U11C087	Lost communication of BCM	1.Received BCM(CANID=0x12A) message at least once	CAN bus circuit is short or open	Check the CAN bus circuit or EMC.
6	U110B87	Lost communication of FAMD	1.Received FAMD(CANID=0x22E) message at least once;	CAN bus circuit is short or open	Check the CAN bus circuit or EMC.
7	U118287	Lost communication of DASH\MMI	1.Received DASH\ MMI(CANID=0x311) message at least once;	"CAN bus circuit is short or open	Check the CAN bus circuit or EMC.
8	U114287	Lost communication of EPS	1.Received EPS(CANID=0x75) message at least once;	CAN bus circuit is short or open	Check the CAN bus circuit or EMC.
9	C144001	Coil Fault	"No faults exists on Coil for 1500ms and KL15 on	Coil damaged	Check wiring and coil from ECU to Coil
10	C144101	Motor Fault	No faults exists on Motor for 1500ms and KL15 on	"Motor damaged	"Check wiring and motor from ECU tomotorl
11	C144274	Functional Fault	Front DeltaN not higher than limit for 500ms	Coil damaged or Motor damaged	Check Front ELD

© CFMOTO Powersports, Inc. This manual is subject to all applicable copyright laws. Reproduction or duplication in any form, whole or in part, is strictly prohbited.

No.	DTC Display Code	DTC Meaning	Fault release conditions	Possible cause of the fault	Service suggestion
12	C144408	2WD/4WD Switch Fault	signal valid for at least 10 times contiuous	2WD/4WD Switch Fault	Check 2WD/4WD Switch
13	C144504	ECU Reset	"ECU not in Reset condition more than 200ms and KL15 Cycle	"The EDS is powered off abnoECU automatically monitors the system voltage, and the system voltage is low at the moment of startuprmally	"Replace ELD ECU/ Check the battery or the connection between battery and ECU
14	C14464B	PCB temperature fault	Temperature monitored below 110 least 200ms	Environment Temperature	Change Environment Temperature
15	C144708	TRAIL switch fault	signal valid for at least 10 times contiuous	"Switch failure	"Check TRAIL switch
16	C144A01	Coil current over limit	The current is below the limit and continues for 1500ms and KL15 Cycle	Coil error	Check the Coil
17	C144B01	motor current over limit	The current is below the limit and continues for 1500ms and KL15 Cycle	Motor blocked	Check the motor
18	C144C01	Coil pre-driver failed	The predrive chip works properly and KL15 Cycle	predrive chip fails	Check the predrive chip
19	C144D01	Motor pre-driver failed	The predrive chip works properly and KL15 Cycle	predrive chip fails	Check the predrive chip
20	C144E01	FL WheelSpeed Sensor Fault	FL wheel speed is not 0km/h for 500ms and KL15 Cycle	FL WheelSpeed Sensor Fails	Check the FL WheelSpeed Sensor
21	C144F01	"FR WheelSpeed Sensor Fault	FR wheel speed is not 0km/h for 500ms and KL15 Cycle	FR WheelSpeed Sensor Fails	Check the FR WheelSpeed Sensor
22	C145101	FR WheelSpeed Sensor Fault	"Either wheel speed is not 0km/h for 500ms and KL15 Cycle	FL and FR WheelSpeed Sensor Fails	Check the FR WheelSpeed Sensor

© CFMOTO Powersports, Inc. This manual is subject to all applicable copyright laws. Reproduction or duplication in any form, whole or in part, is strictly prohbited.

12.18.5 FAMD Fault Code Table

No.	DTC Display Code	DTC Meaning	Fault release conditions	Possible cause of the fault	Service suggestion
1	B111716	Vehicle power supply voltage below threshold	1.battery voltage >= 10V, and keep the status at least at t >= 500ms;	Battery voltage too low	Check power supply battery;
2	B111717	Vehicle power supply voltage above threshold	1.battery voltage <= 15V, and keep the status at least at t >= 500ms;	Battery voltage too high	Check power supply battery;
3	U007388	CAN bus off fault of BICAN / MCAN	1.Message sent successfully	CAN bus circuit is short or open	Check the CAN bus circuit or EMC.
4	U010087	Lost communication of ECM	1.Received ECM(CANID=0x108) message at least once;	CAN bus circuit is short or open	Check the CAN bus circuit or EMC.
5	U11C087	Lost communication of BCM	1.Received BCM(CANID=0x202) message at least once;	CAN bus circuit is short or open	Check the CAN bus circuit or EMC.
6	U114487	Lost communication of EDS	1.Received EDS(CANID=0x211) message at least once;	CAN bus circuit is short or open	Check the CAN bus circuit or EMC.
7	U140B83	<0x108> CheckSum error	The message is normally received at least once,CheckSum_ ErrorCounter=0	CAN bus circuit is short or open	Check the CAN bus circuit or EMC.
8	U120B82	<0x108> RollingCounter error	The message is normally received at least once,Alive_ ErrorCounter=0	CAN bus circuit is short or open	Check the CAN bus circuit or EMC.
9	U141E83	<0x202> CheckSum error	The message is normally received at least once,CheckSum_ ErrorCounter=0	CAN bus circuit is short or open	Check the CAN bus circuit or EMC.
10	U121E82	<0x202> RollingCounter error	The message is normally received at least once,Alive_ ErrorCounter=0	CAN bus circuit is short or open	Check the CAN bus circuit or EMC.
11	P1B4019	Over Current	"1.When the motor operating current is normal <500mA (according to the motor operating current calibration)	motor stalling	Check the motor actuator

© CFMOTO Powersports, Inc. This manual is subject to all applicable copyright laws. Reproduction or duplication in any form, whole or in part, is strictly prohbited.

No.	DTC Display Code	DTC Meaning	Fault release conditions	Possible cause of the fault	Service suggestion
12	P1B4100	Sys check fault	After the bridge motor is energized, the self-test is carried out according to the self-test process, and the self-test is successful	ECU Internal Faults	Check the circuit board
13	P1B4209	Hall fault	When the motor is working, the Hall switch detects correctly	Hall sensor fault	Check Hall sensor

© CFMOTO Powersports, Inc. This manual is subject to all applicable copyright laws. Reproduction or duplication in any form, whole or in part, is strictly prohbited.

12.18.6 MMI Fault Code Table

No.	DTC Display Code	DTC Meaning	Fault release conditions	Possible cause of the fault	Service suggestion
1	B111716	Vehicle power supply voltage below threshold	1.battery voltage >= 10V, and keep the status at least at t >= 500ms;	Battery voltage too low	Check power supply battery;
2	B111717	Vehicle power supply voltage above threshold	1.battery voltage <= 15V, and keep the status at least at t >= 500ms;	Battery voltage too high	Check power supply battery;
3	U220D00	LimpHome DTC	1.Received and sent ring message successfully at least once;	CAN bus circuit is short or open	Check the CAN bus circuit or EMC.
4	U007388	CAN bus off fault of BICAN / MCAN	1.Message sent successfully;	CAN bus circuit is short or open	Check the CAN bus circuit or EMC.
5	U010087	Lost communication of ECM	1.Received ECM(CANID= 0x108) message at least once;	CAN bus circuit is short or open	Check the CAN bus circuit or EMC.
6	U11C087	Lost communication of BCM	1.Received BCM(CANID=0x12A) message at least once;	CAN bus circuit is short or open	Check the CAN bus circuit or EMC.
7	U114687	Lost communication of SCU	1.Received SCU(CANID=0x15C) message at least once;	CAN bus circuit is short or open	Check the CAN bus circuit or EMC.
8	U114487	Lost communication of EDS	1.Received EDS(CANID=0x211) message at least once;	CAN bus circuit is short or open	Check the CAN bus circuit or EMC.
9	U110B87	Lost communication of FAMD	1.Received FAMD(CANID=0x22E) message at least once;	CAN bus circuit is short or open	Check the CAN bus circuit or EMC.

© CFMOTO Powersports, Inc. This manual is subject to all applicable copyright laws. Reproduction or duplication in any form, whole or in part, is strictly prohbited.

12.18.7 PEPS Fault Code Table

No.	DTC Display Code	DTC Meaning	Fault release conditions	Possible cause of the fault	Service suggestion
1	B111716	Vehicle power supply voltage below threshold	1.battery voltage >= 10V, and keep the status at least at t >= 500ms;	Battery voltage too low	Check power supply battery;
2	B111717	Vehicle power supply voltage above threshold	1.battery voltage <= 15V, and keep the status at least at t >= 500ms;	Battery voltage too high	Check power supply battery;
3	U007388	CAN bus off fault of BICAN / MCAN	Message sent successfully;	CAN bus circuit is short or open	Check the CAN bus
4	U220D00	LimpHome DTC	1.Received and sent ring message successfully at least once;	CAN bus circuit is short or open	Check the CAN bus circuit or EMC.
5	U11C087	Lost communication of BCM	1.Received BCM(CANID=0x12A) message at least once;	CAN bus circuit is short or open	Check the CAN bus circuit or EMC.
6	U010087	Lost communication of ECM	1.Received ECM(CANID=0x108) message at least once;	CAN bus circuit is short or open	Check the CAN bus circuit or EMC.
7	U118287	Lost communication of DASH\MMI	1.Received DASH\ MMI(CANID=0x311) message at least once;	CAN bus circuit is short or open	Check the CAN bus circuit or EMC.
8	B140000	Bluetooth communication error	Bluetooth communication is normal	Bluetooth fault of controller	Replace the controller
9	B140100	PEPS IMMO authentication failed	PEPS IMMO authentication succeeded	ESK not written or inconsistent	Write the correct ESK
10	B140200	nfc communication error	nfc communication is normal	nfc or controller fault	Replace the controller or nfc

© CFMOTO Powersports, Inc. This manual is subject to all applicable copyright laws. Reproduction or duplication in any form, whole or in part, is strictly prohbited.

12.18.8 SCU Fault Code Table

No.	DTC Display Code	DTC Meaning	Fault release conditions	Possible cause of the fault	Service suggestion
1	B111716	Vehicle power supply voltage below threshold	1.battery voltage >= 10V, and keep the status at least at t >= 500ms;	Battery voltage too low	Check power supply battery;
2	B111717	Vehicle power supply voltage above threshold	1.battery voltage <= 15V, and keep the status at least at t >= 500ms;	Battery voltage too high	Check power supply battery;
3	U007388	CAN bus off fault of BICAN / MCAN	1.Message sent successfully;	CAN bus circuit is short or open	Check the CAN bus circuit or EMC.
4	U010087	Lost communication of ECM	Received ECM1(CANID=0x108) message at least once;	CAN bus circuit is short or open	Check the CAN bus circuit or EMC.
5	U11C087	Lost communication of BCM	Received BCM1(CANID=0x12A) message at least once;	CAN bus circuit is short or open	Check the CAN bus circuit or EMC.
6	U118287	"Lost communication of DASH\MMI	1.Received DASH\ MMI(CANID=0x311) message at least once;	CAN bus circuit is short or open	Check the CAN bus circuit or EMC.
7	C14C346	parameter memory failure"	Store the parameters correctly again"	ECU Internal circuits damaged"	Check the ECU.
8	C14C419	current above threshold of front-left shock absorber"	current<2A, and keep the status at least at t >= 3000ms;"	1.Shock absorber is damaged 2.circuit is short"	1.check the shock absorber. 2.check the circuit "
9	C14C413	circuit open of front-left shock absorber"	The current value is the normal working current"	1.Shock absorber is damaged 2.circuit is open"	1.check the shock absorber. 2.check the circuit "
10	C14C519	current above threshold of front-right shock absorber"	current<2A, and keep the status at least at t >= 3000ms;"	1.Shock absorber is damaged 2.circuit is short"	1.check the shock absorber. 2.check the circuit "

© CFMOTO Powersports, Inc. This manual is subject to all applicable copyright laws. Reproduction or duplication in any form, whole or in part, is strictly prohbited.

No.	DTC Display Code	DTC Meaning	Fault release conditions	Possible cause of the fault	Service suggestion
11	C14C513	circuit open of front-right shock absorber"	The current value is the normal working current"	1.Shock absorber is damaged 2.circuit is open"	1.check the shock absorber. 2.check the circuit "
12	C14C619	current above threshold of rear-right shock absorber"	current<2A, and keep the status at least at t >= 3000ms;"	1.Shock absorber is damaged 2.circuit is short"	1.check the shock absorber. 2.check the circuit "
13	C14C613	circuit open of rear-right shock absorber"	The current value is the normal working current"	1.Shock absorber is damaged 2.circuit is open"	1.check the shock absorber. 2.check the circuit "
14	C14C719	current above threshold of rear-left shock absorber"	current<2A, and keep the status at least at t >= 3000ms;"	1.Shock absorber is damaged 2.circuit is short"	1.check the shock absorber. 2.check the circuit "
15	C14C713	circuit open of rear-left shock absorber"	The current value is the normal working current"	1.Shock absorber is damaged 2.circuit is open"	1.check the shock absorber. 2.check the circuit "
16	C14C825	signal failure of front-left height sensor"	The sensor signal voltage is in the 0.5-4.5V range, and keep the status at least at t >= 1000ms;"	1.Sensor damaged 2.The circuit is open or short-circuited"	1.check the sensor. 2.check the circuit "
17	C14C925	signal failure of front-right height sensor"	The sensor signal voltage is in the 0.5-4.5V range, and keep the status at least at t >= 1000ms;"	1.Sensor damaged 2.The circuit is open or short-circuited"	1.check the sensor. 2.check the circuit "
18	C14CA25	signal failure of rear-right height sensor"	The sensor signal voltage is in the 0.5-4.5V range, and keep the status at least at t >= 1000ms;"	1.Sensor damaged 2.The circuit is open or short-circuited"	1.check the sensor. 2.check the circuit "

© CFMOTO Powersports, Inc. This manual is subject to all applicable copyright laws. Reproduction or duplication in any form, whole or in part, is strictly prohbited.

No.	DTC Display Code	DTC Meaning	Fault release conditions	Possible cause of the fault	Service suggestion
19	C14CB25	signal failure of rear-left height sensor"	The sensor signal voltage is in the 0.5-4.5V range, and keep the status at least at t >= 1000ms;"	1.Sensor damaged 2.The circuit is open or short-circuited"	1.check the sensor. 2.check the circuit "
20	C14CC25	signal failure of front-left acceleration sensor"	The sensor signal voltage is in the 0.5-4.5V range, and keep the status at least at t >= 1000ms;"	1.Sensor damaged 2.The circuit is open or short-circuited"	1.check the sensor. 2.check the circuit "
21	C14CD25	signal failure of front-right acceleration sensor"	The sensor signal voltage is in the 0.5-4.5V range, and keep the status at least at t >= 1000ms;"	1.Sensor damaged 2.The circuit is open or short-circuited"	1.check the sensor. 2.check the circuit "
22	C14CE25	signal failure of rear-right acceleration sensor"	The sensor signal voltage is in the 0.5-4.5V range, and keep the status at least at t >= 1000ms;"	1.Sensor damaged 2.The circuit is open or short-circuited"	1.check the sensor. 2.check the circuit "
23	C14CF25	signal failure of rear-left acceleration sensor"	The sensor signal voltage is in the 0.5-4.5V range, and keep the status at least at t >= 1000ms;"	1.Sensor damaged 2.The circuit is open or short-circuited"	1.check the sensor. 2.check the circuit "
24	C14D025	signal failure of 6D IMU"	The sensor signal is received."	1.Sensor damaged 2.The circuit is open or short-circuited"	1.check the sensor. 2.check the circuit "

© CFMOTO Powersports, Inc. This manual is subject to all applicable copyright laws. Reproduction or duplication in any form, whole or in part, is strictly prohbited.

12.19 Troubleshooting Based on Engine Fault

Before beginning the procedure of troubleshooting based on engine malfunction phenomena, a preliminary check should be performed first:

1. Confirm that the engine malfunction indicator lamp works normally .
2. Check with the scan tool to confirm that there is no fault message recorded.
3. Confirm the existence of the fault phenomenon complaint by the vehicle owner, and confirm the occurrence of the conditions under which the fault appears.

Perform an exterior inspection:

(1) Check fuel lines for leaks.
(2) Check vacuum lines for breaks, kinks, and proper connections.
(3) Check whether the intake pipe is blocked, leaking, flattened or damaged.
(4) Check whether the high voltage wires of ignition system are broken or aged, and whether the ignition sequence is correct.
(5) Check whether the wiring harness grounds are clean and firm.
(6) Check whether each sensor and actuator connector has loose or poor contact

IMPORTANT: If a phenomenon exists, check first for the fault phenomenon before performing maintenance work, otherwise it will affect the later fault diagnosis and repair work.

Diagnostic help:

1. Confirm that the engine has no fault record.
2. Confirm the existence of the complaint fault.
3. Do not ignore the maintenance of the vehicle, cylinder pressure, mechanical timing, fuel conditions and other effects on the system.
4. Replace the ECM with a known good unit and test the vehicle.

If the fault phenomenon can be eliminated at this time, the fault location is in the ECM. If the fault phenomenon still exists at this time, replace the original ECM, repeat the process, and repair the work again.

Common faults and maintenance:

- When starting, the engine does not rotate or rotates slowly..
- When starting, the engine can be towed but not successfully started
- Difficulty starting a hot car.
- Difficulty starting a cold car.
- Normal speed, but has difficulty starting at all times.
- Starts normally, but idles erratically at all times.
- Starts normally and idles erratically during warm-up.
- Starts normally and idles erratically at end of warm-up.
- Starts normally, idles erratically or flameout under partial load (e.g., headlights on).
- Starts normally, idles too high.
- Speed will not go up or turn off when accelerating
- Slow response when accelerating.
- Weakness and poor performance when accelerating.

© CFMOTO Powersports, Inc. This manual is subject to all applicable copyright laws. Reproduction or duplication in any form, whole or in part, is strictly prohbited.

(1) **When starting, the engine does not turn or rotates slowly**

General fault location: 1. battery 2. starting motor 3. wiring harness or ignition switch. 4. engine mechanical part.

General diagnostic procedures:

No.	Operation procedure	Result	Subsequent steps
1	Use a multimeter to check if the voltage between the two battery terminals is about 8V~12V when the engine is starting.	Yes	Next step
		No	Replace battery
2	Keep the ignition switch in the start position, and use a multimeter to check if there is more than 8V at the positive terminal of the starter motor.	Yes	Next step
		No	Repair or replace wiring harnesses
3	Remove the starter motor and check the working condition of the starter motor. Focus on checking that it is not disconnected or seized due to poor lubrication.	Yes	Repair or replace the starter motor
		No	Next step
4	If the failure occurs only in winter, check for excessive resistance of the starter motor due to improper choice of engine lubricant.	Yes	Change appropriate lubricating.
		No	Next step
5	Check for excessive mechanical resistance inside the engine that causes the starter motor to not turn or to turn slowly.	Yes	Maintenance internal engine resistance
		No	Repeat the above steps

(2) When starting, the engine can be towed but cannot be started successfully.

General fault location: 1. no oil in oil tank. 2. fuel pump. 3. trigger. 4. ignition coil. 5. engine mechanical parts.

General diagnostic procedures:

No.	Operation procedure	Result	Subsequent steps
1	Connect the fuel pressure gauge (access point injector inlet pipe front), turn on the ignition switch, if necessary, repeat several times, or start the engine, check whether the fuel pressure is about 3.3bar.	Yes	Next step
		No	Maintenance oil supply system
2	Connect the EFI system diagnostic instrument, observe the "engine speed" data item, start the engine, observe whether there is speed signal output.	Yes	Next step
		No	Maintenance speed sensor wiring
3	Pull out the ignition high-voltage wire, connect the spark plug, make the spark plug electrode about 5mm away from the engine body, start the engine, check whether there is blue and white high-pressure fire.	Yes	Next step
		No	Maintenance ignition system

© CFMOTO Powersports, Inc. This manual is subject to all applicable copyright laws. Reproduction or duplication in any form, whole or in part, is strictly prohbited.

No.	Operation procedure	Result	Subsequent steps
4	Check the pressure condition of the engine cylinder and observe whether there is insufficient pressure in the engine cylinder.	Yes	Eliminate mechanical faults in the engine
		No	Next step
5	Connect electronic fuel injection system adapter, turn on ignition switch, and check whether power supply of the ECM related pins is normal (see ECM pin functions for details). Check if the ECM pins GND is normal (see ECM pin functions for details).	Yes	Diagnostic help
		No	Repair corresponding wiring

(3) Difficulty starting a hot vehicle

General fault location: 1. Fuel contains water 2. Fuel pump 3. Engine water temperature sensor 4. Ignition coil

General diagnostic procedures:

No.	Operation procedure	Result	Subsequent steps
1	Connect the fuel pressure gauge (access point injector inlet pipe front), turn on the ignition switch, if necessary, repeat several times, or start the engine, check whether the fuel pressure is about 3.3bar.	Yes	Next step
		No	Maintenance ignition system
2	Pull out the ignition high-voltage wire, connect the spark plug, make the spark plug electrode about 5mm away from the engine body, start the engine, check whether there is blue and white high-pressure fire.	Yes	Next step
		No	Maintenance ignition system
3	Disconnect the engine water temperature sensor connector, start the engine, and observe if the engine starts successfully at this time. (Or connect a 300 ohm resistor in series at the engine water temperature sensor connector to replace the engine temperature sensor, and observe whether the engine starts successfully at this time.)	Yes	Repair wiring or replace sensor
		No	Next step
4	Check the fuel condition and observe whether the fault phenomenon is caused by just refueling.	Yes	Change fuel
		No	Next step
5	Connect electronic fuel injection system adapter, turn on ignition switch, and check whether power supply of the ECM related pins is normal (see ECM pin functions for details). Check if the ECM pins GND is normal (see ECM pin functions for details).	Yes	Diagnostic help
		No	Repair corresponding wiring

(4) Difficulty starting a cold vehicle

General fault location: 1. Fuel contains water 2. Fuel pump 3. Engine water temperature sensor 4. Fuel injector 5. Ignition coil 6. Throttle body and idle bypass airway
7. Engine mechanical part
General diagnostic procedures:

© CFMOTO Powersports, Inc. This manual is subject to all applicable copyright laws. Reproduction or duplication in any form, whole or in part, is strictly prohbited.

No.	Operation procedure	Result	Subsequent steps
1	Connect the fuel pressure gauge (access point injector inlet pipe front), turn on the ignition switch, if necessary, repeat several times, or start the engine, check whether the fuel pressure is about 3.3bar.	Yes	Next step
		No	Maintenance oil supply system
2	Pull out the ignition high-voltage wire, connect the spark plug, make the spark plug electrode about 5mm away from the engine body, start the engine, check whether there is blue and white high-pressure fire.	Yes	Next step
		No	Maintenance ignition system
3	Disconnect the engine water temperature sensor connector, start the engine, and observe if the engine starts successfully at this time. (Or connect a 2500 ohm resistor in series at the engine water temperature sensor connector to replace the engine temperature sensor, and observe whether the engine starts successfully at this time.)	Yes	Repair wiring or replace sensor
		No	Next step
4	Gently pull throttle to see if it's easy to start.	Yes	Clean throttle and idle airway
		No	Next step
5	Remove fuel injector and use a specialized cleaning analyzer to check for leaks or blockages in fuel injector	Yes	Replace faulty part
		No	Next step
6	Check the fuel condition and observe whether the fault phenomenon is caused by just refueling.	Yes	Change fuel
		No	Next step
7	Check the pressure condition of the engine cylinder and observe whether there is insufficient pressure in the engine cylinder.	Yes	Troubleshoot engine mechanical problems
		No	Next step
8	Connect electronic fuel injection system adapter, turn on ignition switch, and check whether power supply of the ECM related pins is normal (see ECM pin functions for details). Check if the ECM pins GND is normal (see ECM pin functions for details).	Yes	Diagnostic help
		No	Repair corresponding wiring

(5) Normal speed, but has difficulty starting at all times.

General fault location: 1. Fuel contains water 2. Fuel pump 3. Engine water temperature sensor 4. Fuel injector 5. Ignition coil 6. Throttle body and idle bypass airway 7. Air inlet 8. Ignition timing 9. Spark plug 10. Engine mechanical part

General diagnostic procedures:

No.	Operation procedure	Result	Subsequent steps
1	Check whether the air filter is blocked and whether there is air leakage in the inlet.	Yes	Maintenance intake system
		No	Next step

© CFMOTO Powersports, Inc. This manual is subject to all applicable copyright laws. Reproduction or duplication in any form, whole or in part, is strictly prohbited.

No.	Operation procedure	Result	Subsequent steps
2	Connect the fuel pressure gauge (access point injector inlet pipe front), turn on the ignition switch, if necessary, repeat several times, or start the engine, check whether the fuel pressure is about 3.3bar.	Yes	Next step
		No	Maintenance oil supply system
3	Pull out spark plug cap, connect the spark plug, make the spark plug electrode about 5mm away from the engine body, start the engine, check whether there is blue and white high-pressure fire.	Yes	Next step
		No	Maintenance ignition system
4	Check the spark plug of the cylinder, and observe whether its type and clearance meet the specification.	Yes	Next step
		No	Adjust or replace
5	Disconnect the engine water temperature sensor connector, start the engine, and observe if the engine starts successfully at this time.	Yes	Repair wiring or replace sensor
		No	Next step
6	Gently pull throttle to see if it's easy to start.	Yes	Clean throttle and idle airway
		No	Next step
7	Remove fuel injector and use a specialized cleaning analyzer to check for leaks or blockages in fuel injector.	Yes	Replace faulty part
		No	Next step
8	Check the fuel condition and observe whether the fault phenomenon is caused by just refueling.	Yes	Change fuel
		No	Next step
9	Check the pressure condition of the engine cylinder and observe whether there is insufficient pressure in the engine cylinder.	Yes	Troubleshoot engine mechanical problems
		No	Next step
10	Check the mechanical ignition timing of the engine to meet the specification.	Yes	Next step
		No	Maintenance ignition timing
11	Connect electronic fuel injection system adapter, turn on ignition switch, and check whether power supply of the ECM related pins is normal (see ECM pin functions for details). Check if the ECM pins GND is normal (see ECM pin functions for details).	Yes	Diagnostic help
		No	Repair the corresponding wiring

(6) Starts normally, but idles erratically at all times.

General fault location: 1. Fuel contains water 2. Fuel injector 3. Spark plug 4. Throttle body and idle bypass airway 5. Air inlet 6. Idle air control valve 7. Ignition timing 8. Engine mechanical part

General diagnostic procedures:

No.	Operation procedure	Result	Subsequent steps
1	Check whether the air filter is blocked and whether there is air leakage in the inlet.	Yes	Maintenance intake system
		No	Next step

© CFMOTO Powersports, Inc. This manual is subject to all applicable copyright laws. Reproduction or duplication in any form, whole or in part, is strictly prohbited.

No.	Operation procedure	Result	Subsequent steps
2	Check whether idle air control valve is stuck.	Yes	Clean or replace
		No	Next step
3	Check the spark plug of the cylinder, and observe whether its type and clearance meet the specification.	Yes	Next step
		No	Adjust or replace
4	Inspect throttle body and idle bypass airway for carbon accumulation.	Yes	Clean
		No	Next step
5	Remove fuel injector and use a specialized cleaning analyzer to check for leaks or blockages in fuel injector	Yes	Replace faulty part
		No	Next step
6	Check the fuel condition and observe whether the fault phenomenon is caused by just refueling.	Yes	Change fuel
		No	Next step
7	Check the pressure condition of the engine cylinder and observe whether there is a significant difference in engine cylinder pressure.	Yes	Troubleshoot engine mechanical problems
		No	Next step
8	Check the mechanical ignition timing of the engine to meet the specification.	Yes	Next step
		No	Maintenance ignition timing
9	Connect electronic fuel injection system adapter, turn on ignition switch, and check whether power supply of the ECM related pins is normal (see ECM pin functions for details). Check if the ECM pins GND is normal (see ECM pin functions for details).	Yes	Diagnostic help
		No	Maintenance the corresponding circuit

(7) Starts normally and idles erratically during warm-up.

General fault location: 1. Fuel contains water 2. Engine water temperature sensor
3. Spark plug 4. Throttle body and idle bypass airway 5. Air inlet
6. Idle air control valve 7. Engine mechanical part

General diagnostic procedures:

No.	Operation procedure	Result	Subsequent steps
1	Check whether the air filter is blocked and whether there is air leakage in the inlet.	Yes	Maintenance intake system
		No	Next step
2	Check the spark plug of the cylinder, and observe whether its type and clearance meet the specification.	Yes	Next step
		No	Adjust or replace
3	Remove idle air control valve and inspect throttle body, idle air control valve knuckle and idle bypass airway for carbon accumulation.	Yes	Clean related parts
		No	Next step
4	Disconnect the engine water temperature sensor connector, start the engine, and observe whether the engine idle speed is unstable during warm-up.	Yes	Repair wiring or replace sensor
		No	Next step
5	Remove fuel injector and use a specialized cleaning analyzer to check for leaks or blockages in fuel injector	Yes	Replace faulty part
		No	Next step

© CFMOTO Powersports, Inc. This manual is subject to all applicable copyright laws. Reproduction or duplication in any form, whole or in part, is strictly prohbited.

No.	Operation procedure	Result	Subsequent steps
6	Check the fuel condition and observe whether the fault phenomenon is caused by just refueling.	Yes	Change fuel
		No	Next step
7	Check the pressure condition of the engine cylinder and observe whether there is a significant difference in engine cylinder pressure	Yes	Troubleshoot engine mechanical problems
		No	Next step
8	Connect electronic fuel injection system adapter, turn on ignition switch, and check whether power supply of the ECM related pins is normal (see ECM pin functions for details). Check if the ECM pins GND is normal (see ECM pin functions for details).	Yes	Diagnostic help
		No	Maintenance the corresponding circuit

(8) Starts normally and idles erratically at end of warm-up.

General fault location: 1. Fuel contains water 2. Engine water temperature sensor 3. Spark plug 4. Throttle body and idle bypass airway 5. Air inlet 6. Idle air control valve 7. Engine mechanical part

General diagnostic procedures:

No.	Operation procedure	Result	Subsequent steps
1	Check whether the air filter is blocked and whether there is air leakage in the inlet.	Yes	Maintenance intake system
		No	Next step
2	Check the spark plug, and observe whether its type and clearance meet the specification.	Yes	Next step
		No	Adjust or replace
3	Remove idle air control valve and inspect throttle body, idle air control valve and idle bypass airway for carbon accumulation.	Yes	Clean related parts
		No	Next step
4	Disconnect the engine water temperature sensor connector, start the engine, and observe whether the engine idle speed is unstable during warm-up.	Yes	Repair wiring or replace sensor
		No	Next step
5	Remove fuel injector and use a specialized cleaning analyzer to check for leaks or blockages in fuel injector	Yes	Replace faulty part
		No	Next step
6	Check the fuel condition and observe whether the fault phenomenon is caused by just refueling.	Yes	Change fuel
		No	Next step
7	Check the pressure condition of the engine cylinder and observe whether there is a significant difference in engine cylinder pressure	Yes	Troubleshoot engine mechanical problems
		No	Next step
8	Connect electronic fuel injection system adapter, turn on ignition switch, and check whether power supply of the ECM related pins is normal (see ECM pin functions for details). Check if the ECM pins GND is normal (see ECM pin functions for details).	Yes	Diagnostic help
		No	Maintenance the corresponding circuit
9	Turn off the switch lock for 3 seconds and then re-open and start	Yes	
		No	Maintenance the corresponding circuit

© CFMOTO Powersports, Inc. This manual is subject to all applicable copyright laws. Reproduction or duplication in any form, whole or in part, is strictly prohibited.

(9) Starts normally, idles erratically or flameout under partial load (e.g., headlights on).

General fault location: 1. Idle air control valve. 2. Fuel injector.

General diagnostic procedures:

No.	Operation procedure	Result	Subsequent steps
1	Remove idle air control valve and inspect throttle body, idle air control valve knuckle and idle bypass airway for carbon accumulation.	Yes	Clean related parts
		No	Next step
2	Observe whether the engine output increases when the load is turned on, i.e., use the EFI system diagnostic instrument to observe the changes in ignition advance angle, injection pulse width and air intake.	Yes	Go to Step 4
		No	Next step
		No	Maintenance air conditioning system
3	Remove fuel injector and use a specialized cleaning analyzer to check for leaks or blockages in fuel injector	Yes	Replace faulty part
		No	Next step
4	Connect electronic fuel injection system adapter, turn on ignition switch, and check whether power supply of the ECM related pins is normal (see ECM pin functions for details). Check if the ECM pins GND is normal (see ECM pin functions for details)	Yes	Diagnostic help
		No	Maintenance the corresponding circuit

(10) Starts normally, idles too high.

General fault location: 1. Throttle body and idle bypass airway 2. Fuel injector seat 3. Idle air control valve 4. Engine water temperature sensor 5. Ignition timing

General diagnostic procedures:

No.	Operation procedure	Result	Subsequent steps
1	Check whether throttle cable is stuck or too tight.	Yes	Adjust
		No	Next step
2	Check intake system and the connected fuel injector seat for air leakage.	Yes	Maintenance intake system
		No	Next step
3	Remove idle air control valve and inspect throttle body, idle air control valve knuckle and idle bypass airway for carbon accumulation.	Yes	Clean related parts
		No	Next step
4	Disconnect the engine water temperature sensor connector, start the engine, and observe whether the engine idle speed is too high during warm-up.	Yes	Repair wiring or replace sensor
		No	Next step
5	Check the mechanical ignition timing of the engine to meet the specification.	Yes	Next step
		No	Maintenance ignition timing
6	Turn off the switch lock for 3 seconds and then re-open and start	Yes	
		No	Maintenance the corresponding circuit

© CFMOTO Powersports, Inc. This manual is subject to all applicable copyright laws. Reproduction or duplication in any form, whole or in part, is strictly prohbited.

No.	Operation procedure	Result	Subsequent steps
7	Connect electronic fuel injection system adapter, turn on ignition switch, and check whether power supply of the ECM related pins is normal (see ECM pin functions for details). Check if the ECM pins GND is normal (see ECM pin functions for details).	Yes	Diagnostic help
		No	Maintenance the corresponding circuit

(11) Speed will not go up or turn off when accelerating

General fault location: 1. Fuel contains water 2. Intake pressure sensor and throttle position sensor 3. Spark plug 4. Throttle body and idle bypass airway 5. Air inlet 6. Idle air control valve 7. Fuel injector 8. Ignition timing 9. Exhaust pipe

General diagnostic procedures:

No.	Operation procedure	Result	Subsequent steps
1	Check whether air filter is blocked.	Yes	Maintenance intake system
		No	Next step
2	Connect the fuel pressure gauge (access point injector inlet pipe front), start the engine, check whether the fuel pressure is about 3.3 bar.	Yes	Next step
		No	Maintenance oil supply system
3	Check the spark plug of the cylinder, and observe whether its type and clearance meet the specification.	Yes	Next step
		No	Adjust or replace
4	Remove idle air control valve and inspect throttle body, idle air control valve and idle bypass airway for carbon accumulation.	Yes	Clean related parts
		No	Next step
5	Check whether the intake pressure sensor, throttle position sensor and their wiring are normal.	Yes	Next step
		No	Repair wiring or replace sensor
6	Remove fuel injector and use a specialized cleaning analyzer to check for leaks or blockages in fuel injector	Yes	Replace faulty part
		No	Next step
7	Check the fuel condition and observe whether the fault phenomenon is caused by just refueling.	Yes	Change fuel
		No	Next step
8	Check whether the ignition sequence and ignition timing of the engine comply with the specification	Yes	Next step
		No	Maintenance ignition timing
9	Check whether exhaust pipe exhausts smoothly.	Yes	Next step
		No	Repair or replace exhaust pipe
10	Connect electronic fuel injection system adapter, turn on ignition switch, and check whether power supply of the ECM related pins is normal (see ECM pin functions for details). Check if the ECM pins GND is normal (see ECM pin functions for details).	Yes	Diagnostic help
		No	Repair the corresponding wiring

© CFMOTO Powersports, Inc. This manual is subject to all applicable copyright laws. Reproduction or duplication in any form, whole or in part, is strictly prohibited.

(12) Slow response when accelerating.

General fault location: 1. Fuel contains water 2. Intake pressure sensor and throttle position sensor 3. Spark plug 4. Throttle body and idle bypass airway 5. Air inlet 6. Idle air control valve 7. Fuel injector 8. Ignition timing 9. Exhaust pipe

General diagnostic procedures:

No.	Operation procedure	Result	Subsequent steps
1	Check whether the air filter is blocked.	Yes	Maintenance intake system
		No	Next step
2	Connect the fuel pressure gauge (access point injector inlet pipe front), start the engine, check whether the fuel pressure is about 3.3 bar at idle.	Yes	Next step
		No	Maintenance oil supply system
3	Check the spark plug of the cylinder, and observe whether its type and clearance meet the specification	Yes	Next step
		No	Adjust or replace
4	Remove idle air control valve and inspect throttle body, idle air control valve and idle bypass airway for carbon accumulation.	Yes	Clean related parts
		No	Next step
5	Check whether the intake pressure sensor, throttle position sensor and their wiring are normal.	Yes	Next step
		No	Repair wiring or replace sensor
6	Remove fuel injector and use a specialized cleaning analyzer to check for leaks or blockages in fuel injector	Yes	Replace faulty part
		No	Next step
7	Check the fuel condition and observe whether the fault phenomenon is caused by just refueling.	Yes	Change fuel
		No	Next step
8	Check whether the ignition sequence and ignition timing of the engine comply with the specification	Yes	Next step
		No	Maintenance ignition timing
9	Check whether exhaust pipe exhausts smoothly.	Yes	Next step
		No	Repair or replace exhaust pipe
10	Connect electronic fuel injection system adapter, turn on ignition switch, and check whether power supply of the ECM related pins is normal (see ECM pin functions for details). Check if the ECM pins GND is normal (see ECM pin functions for details)	Yes	Diagnostic help
		No	Repair the corresponding wiring

© CFMOTO Powersports, Inc. This manual is subject to all applicable copyright laws. Reproduction or duplication in any form, whole or in part, is strictly prohbited.

(13) Weak and poor performance when accelerating.

General fault location: 1. Fuel contains water 2. Intake pressure sensor and throttle position sensor 3. Spark plug 4. Ignition coil 5. Throttle body and idle bypass airway. 6. Air inlet 7. Idle air control valve 8. Fuel injector 9. Ignition timing10. Exhaust pipe

General diagnostic procedures:

No.	Operation procedure	Result	Subsequent steps
1	Check for clutch slippage, low tire pressure, brake drag, incorrect tire size, etc.	Yes	Repair
		No	Next step
2	Check whether air filter is blocked.	Yes	Maintenance intake system
		No	Next step
3	Connect fuel pressure gauge (the access point is the front of the injector inlet line), start the engine, and check that fuel pressure is around 3.3bar at idle.	Yes	Next step
		No	Maintenance oil supply system
4	Pull out the ignition high-voltage wire, connect the spark plug, make the spark plug electrode about 5mm away from the engine body, start the engine, check whether the high pressure fire intensity is normal.	Yes	Next step
		No	Maintenance ignition system
5	Check the spark plug of the cylinder, and observe whether its type and clearance meet the specification.	Yes	Next step
		No	Adjust or replace
6	Remove idle air control valve and inspect throttle body, idle air control valve and idle bypass airway for carbon accumulation.	Yes	Clean related parts
		No	Next step
7	Check whether the intake pressure sensor, throttle position sensor and their wiring are normal.	Yes	Next step
		No	Repair wiring or replace sensor
8	Remove fuel injector and use a specialized cleaning analyzer to check for leaks or blockages in fuel injector	Yes	Replace faulty part
		No	Next step
9	Check the fuel condition and observe whether the fault phenomenon is caused by just refueling.	Yes	Change fuel
		No	Next step
10	Check the mechanical ignition timing of the engine to meet the specification.	Yes	Next step
		No	Maintenance ignition timing
11	Check whether exhaust pipe exhausts smoothly.	Yes	Next step
		No	Repair or replace exhaust pipe
12	Connect electronic fuel injection system adapter, turn on ignition switch, and check whether power supply of the ECM related pins is normal (see ECM pin functions for details). Check if the ECM pins GND is normal (see ECM pin functions for details).	Yes	Diagnostic help
		No	Repair the corresponding wiring

© CFMOTO Powersports, Inc. This manual is subject to all applicable copyright laws. Reproduction or duplication in any form, whole or in part, is strictly prohibited.

MY2026 ZFORCE 210 / 210-4 Wire Diagram

NOTE: Certain components depicted are intended for global markets

